STOLL
THE RIGHT WAY TO KNIT

CMS 822 (Type 574)

Component Type 001

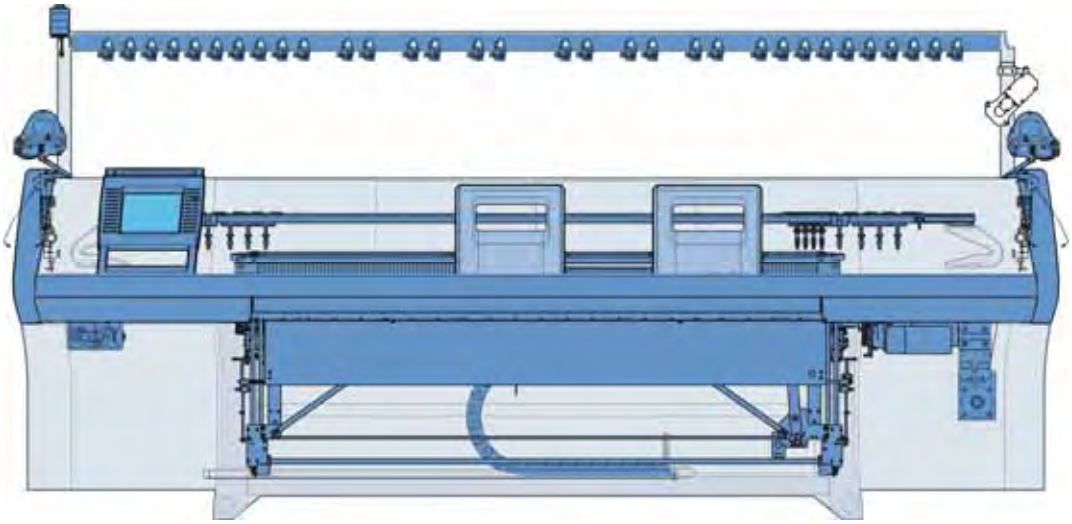

Document-No. 243960_07_GB

Impressum

All rights reserved.
The utilisation of texts and pictures, also in extracts, without our agreement is unfavourable to the copyright.
Our products are being developed further continuously. They are therefore subject to technical modifications.
The indications of this catalog are without liability.

©

H. Stoll GmbH & Co.KG

Stollweg 1

D-72760 Reutlingen, Germany

Phone: +49 (07121) 313-289

Fax: +49 (07121) 313-347

e-mail: spareparts@stoll.com

Introduction

Notes for the order

This catalog serves to order spare parts.

It applys only to the machine type recorded on the title page.

With orders of spare parts we earnestly request the following details, as otherwise a satisfactory delivery of parts is not possible:

1. Type of machine, gauge, no. of machine.
2. Page no., specification, ident. no., quantity.

Please use the order form!

Use original spare parts from Stoll for repairing only.

Order form

Telefon +49 (7121) 313-289
Telefax +49 (7121) 313-347
email: spareparts@stoll.com

H. Stoll GmbH & Co. KG
PO box 2544

D-72715 Reutlingen

Order number

Receipt date

Company

Name

Street

Postal code town

Phone

Fax

Customer no.

Shipping mode

Date of order

Maschine type

Gauge

Masch.-Nr.

Sirix-Nr.

Spare parts order

Page no.	Designation	Ident no.	Piece no.	Comment

Date Signature

Search help

In order to make the search of the spare parts easier, the following elements will be used in the spare parts catalog:

Symbol	Meaning
Σ	Indicates an assembly
X	Position indicator with the position number (X).
X*	Indicates an element of another assembly.
X	Indicates an assembly which is represented more detailed beside.
X	Indicates an assembly which is represented on another page more detailed.
z Nm	Screw torques (z) deviating from the preferential row.
	Detail, represented enlarged in the direction of the arrow.
X	Indicates a group of parts.
L	Indicates the left side or view.
R	Indicates the right side or view.
A A	Indicates a section or a view in the viewing direction.

Torques

Drehmomente **Torques** **Couples** **Coppias** **Momentos de rotación** [Nm] ± 10 % (für μ_{ges} = 0,12)		Festigkeitsklassen Property class Classes de résistance Classi di resistenza Clasas de resistencia		
		4,8	8,8	12,9
Regelgewinde Coarse-pitch thread Filetage à pas gros Filetto regolatore Filete regolador	M3	**0,6**	**1,2**	**2,5**
	M4	**1,2**	**2,5**	**5**
	M5	**2,5**	**5**	**9**
	M6	**5**	**9**	**18**
	M8		**18**	**40**
	M10		**40**	
	M12		**80**	

Preferential row of screw torques

- Torques are valid for:
  Connection steel-steel, black, phosphatized, galvanized, rolled or cut thread as well as only for plain (head) supports.
- Torques are not valid for:
  protected screws with: Lock washers, rib heads, coated and clamping screws and nuts. They are also not used for self-grooving threads.
- Torques differing from this preferential row of torques must be taken from the corresponding location in the drawings.

Table of contents

Impressum 2

Introduction 3

Search help 5

Torques 6

Carriage drive 15

Drive 16

Motor and belt drive 17

Tension bearing 18

Energy chain and carriage driver 19

Racking 20

Racking drive 21

Needle beds 22

Needle bed E5 23

Continuation needle bed E5 24

Needle bed E7 25

Continuation needle bed E7 26

Needle bed E8 27

Continuation needle bed E8 28

Needle bed E10 29

Continuation needle bed E10 30

Needle bed E12 31

Continuation needle bed E12 32

Needle bed E14 33

Continuation needle bed E14 34

Needle bed E16 35

Continuation needle bed E16 36

Needle bed E18 37

Continuation needle bed E18 38

Needle bed E5m.4 39

Continuation needle bed E5m.4 40

Needle bed E7m.5 41

Continuation needle bed E7m.5 42

Needle bed E7m.8 43

Continuation needle bed E7m.8 44

Needle bed E8m.7 45

Continuation needle bed E8m.7 46

Needle bed E10m.12 47

Continuation needle bed E10m.12 48

Needle bed E6.2 (12m.10) 49

Continuation needle bed E6.2(12m.10) 50

Needle bed E2,5.2 k&w 51

Continuation needle bed E2,5.2 k&w 52

Needle bed E3,5.2 k&w 53

Continuation needle bed E3,5.2 k&w 54

Needle bed E5.2 k&w 55

Continuation needle bed E5.2 k&w 56

Needle bed E6.2 k&w 57

Continuation needle bed E6.2 k&w 58

Needle bed E7.2 k&w 59

Continuation needle bed E7.2 k&w 60

Needle bed E2,5.2 mg 61

Continuation needle bed E2,5.2 mg 62

Needle bed E3,5.2 mg 63

Continuation needle bed E3,5.2 mg 64

Needle bed E5.2 mg 65

Continuation needle bed E5.2 mg 66

Needle bed E6.2 mg 67

Continuation needle bed E6.2 mg 68

Needle bed E7.2 mg 69

Continuation needle bed E7.2 mg 70

Needle bed E8.2 mg 71

Continuation needle bed E8.2 mg 72

Left clamping/cutting bed E5-8 73

Left clamping/cutting bed E10-14 74

Left clamping/cutting bed E16-18 75

Right clamping/cutting bed E5-8 76

Right clamping/cutting bed E10-14 77

Right clamping/cutting bed E16-18 78

Cover on the left and on the right 79

Tandem carriage 80

Overview of carriage 81

Carriage assembly 82
Carriage guide 83
Spare parts package carriage guide bar 84
Carriage cover 85
Carriage coupling 86
Brush holder 87
Yarn carrier driving without guiding part 88
Yarn carrier driving with guiding part 89
Holding-down jack control 90
Control unit holding-down jack complete 91
Jack cam E5 + E2,5.2 92
Jack cam E7-8+3,5.2 93
Jack cam box E10 94
Jack cam box complete E12-14 95
Jack cam box E16 96
Jack cam box E5.2 k&w + E6.2 k&w 97
Jack cam box E7.2 kw 98
Jack cam box E7.2 mg 99
Needle detector 100
Yarn detector 101
Cam box E5 + E5m.4 + E7m.5 + E2,5.2 k&w + E2,5.2 mg + E3,5.2 k&w + E3,5.2 mg + E5.2 k&w + E5.2 mg 102

Cams E5 + E5m.4 + E7m.5 + E2,5.2 k&w + E2,5.2 mg + E3,5.2 k&w + E3,5.2 mg + E5.2 k&w + E5.2 mg 103
Cams for narrow coupling E5 + E5m.4 + E7m.5 + E2,5.2 k&w + E2,5.2 mg + E3,5.2 k&w + E3,5.2 mg + E5.2 k&w + E5.2 mg + E7 + E8 + E7m.8 + E8m.7 104
Cam box E7 + E8 + E7m.8 + E8m.7 105
Cams E7 + E8 + E7m.8 + E8m.7 106
Cam box E10 107
Cams E10 108
Cams for narrow coupling E10 + E10m.12 + E12 + E12m.10 +E6.2 mg + E14 + E7.2 mg + E16 + E18 + E8.2 mg 109
Cam box E10m.12 110
Cams E10m.12 111
Cam box E6.2 k&w 112
Cams E6.2 k&w + E7.2 k&w 113
Cams for narrow coupling E6.2 k&w + E7.2 k&w 114
Cam box E6.2 mg 115
Cams E6.2 mg 116
Cam box E12 117
Cams E12 118
Cam box E6.2 (12m.10) 119
Cam E12m.10 120
Cam box E14 121
Cams E14 122
Cam box E7.2 k&w 123
Cam box E7.2 mg 124
Cams E7.2 mg 125
Cam box E16 + E18 126
Cams E16 + E18 127
Cam box E8.2 mg 128
Cams E8.2 mg 129

Main take-down 130

Take-down rollers and left bearing 131

Take-down motor and right bearing 132

Swivel-mounted bearing 133
Rear take-down roller 134
Impulse giver and motor 135
Stripper angle 136
Front take-down roller 137
Front roller elements 138

Pressure angle rail....139
Mounting plate....140
Floating axle....141
Take-down closing device....142
Closer shaft....143
Right swivel support....144
Left swivel holder....145
Swivel holder in the middle....146

Auxiliary take-down.... 147

Auxiliary take-down....148
Motor....149
Left bearing of the auxiliary take-down....150
Right bearing of the auxiliary take-down....151
Contact lever....152
Take-down roller....153

Comb take-down.... 154

Comb take-down....155
Drive shaft of comb....156
Comb unit....157
Switch lever comb take-down....158
Swivel lever comb take-down....159

Yarn delivery device 160

Yarn guide system from 20 up to 26 FKE....161
Yarn guide system with 32 FKE....162
Yarn control unit....163
Left yarn guide....164
Left yarn tensioner....165
Yarn brake and yarn deflector....166
Left tension axle....167
Right yarn guide....168
Right yarn tensioner....169
Right tension axle....170
Bobbin board....171
Yarn carrier and guide rails....172

Complete yarn carriers 173

Left friction feed wheel 174

Right friction feed wheel 175

Feed wheel SFE 176

Fluff absorption 177

Fluff absorption 178

Lint container 179

Set of tubes on the left and right 180

Operation and control 181

Input unit 182

Starting unit 183

Bearing of the engaging rod 184

Signal light 185

Collecting area - control 186

Shock stop motion E5-14 187

Shock stop motion E16-18 188

Measuring device 189

Protective units 190

Lateral safety covers 191

Panelling 192

Rear panel 193

Electrical equipment 194

Fuses 195

Circuit diagram as PDF 196

Trailing cable 197

Cable 198

Control electronics 201

Left control cabinet 202

Right control cabinet 203

Deliverable accessories 204

Tool 205

Lubricating stuff 206

Mechanical parts 207

Special equipment 208

Complete intarsia yarn carriers 209

Carriage IYC 210

Bow and head IYC 211

Bow of plating yarn carrier 212

STIXX device 213

IRO NOVA storage feed wheel 214

Additional board 215

Conversion kit 32 IYC type 2 216

Overview of conversion kit E5 217

Overview of conversion kit E7-18 218

Magnetic support 219

Parts for the left safety cover 220

Parts for the right safety cover 221

Parts for the yarn guide system (6 FKE) 222

Parts for the yarn guide system (12 FKE) 223

Driving in the middle 224

Driving outside 225

Friction feed wheel on the left 226

Friction feed wheel on the right 227

Thread deflector on the left 228

Yarn deflector on the right 229

Left clamping/cutting bed E5-8 230

Left clamping/cutting bed E10-14 231

Left clamping/cutting bed E16-18 232

Right clamping/cutting bed E5-8 233

Right clamping/cutting bed E10-14 234

Right clamping/cutting bed E16-18 235

Yarn brake on the left and right 236

Additional board 237

Adjusting part 238

Yarn guide complete E5 IYC 239

Yarn guide complete E7-8 IYC 240

Yarn guide complete E10-14 IYC 241

Yarn guide complete E16-18 IYC 242

Carriage drive

Drive

Pos	Designation	Ident No	Pos	Designation	Ident No
Σ	**Drive unit racking**	**241 920**	23	Ventilator complete	242 413
10	Stop point	226 553		23a Ventilator	213 722
11	Drive unit complete	240 743		23b Ventilator plate drive motor	241 823
12	Tension bearing complete	241 655		550 Cap screw M8X12	023 138
14	Toothed belt 50AT10/7150	236 656	904	Cap screw M10x80	020 165
16	Distance pipe	222 099	905	Slide nut M10X12	023 471
17	Parabolic spring	200 661	906	Spring washer A 10	021 010
18	Hexagon bolt	238 922	907	Cap screw M10x25	020 157

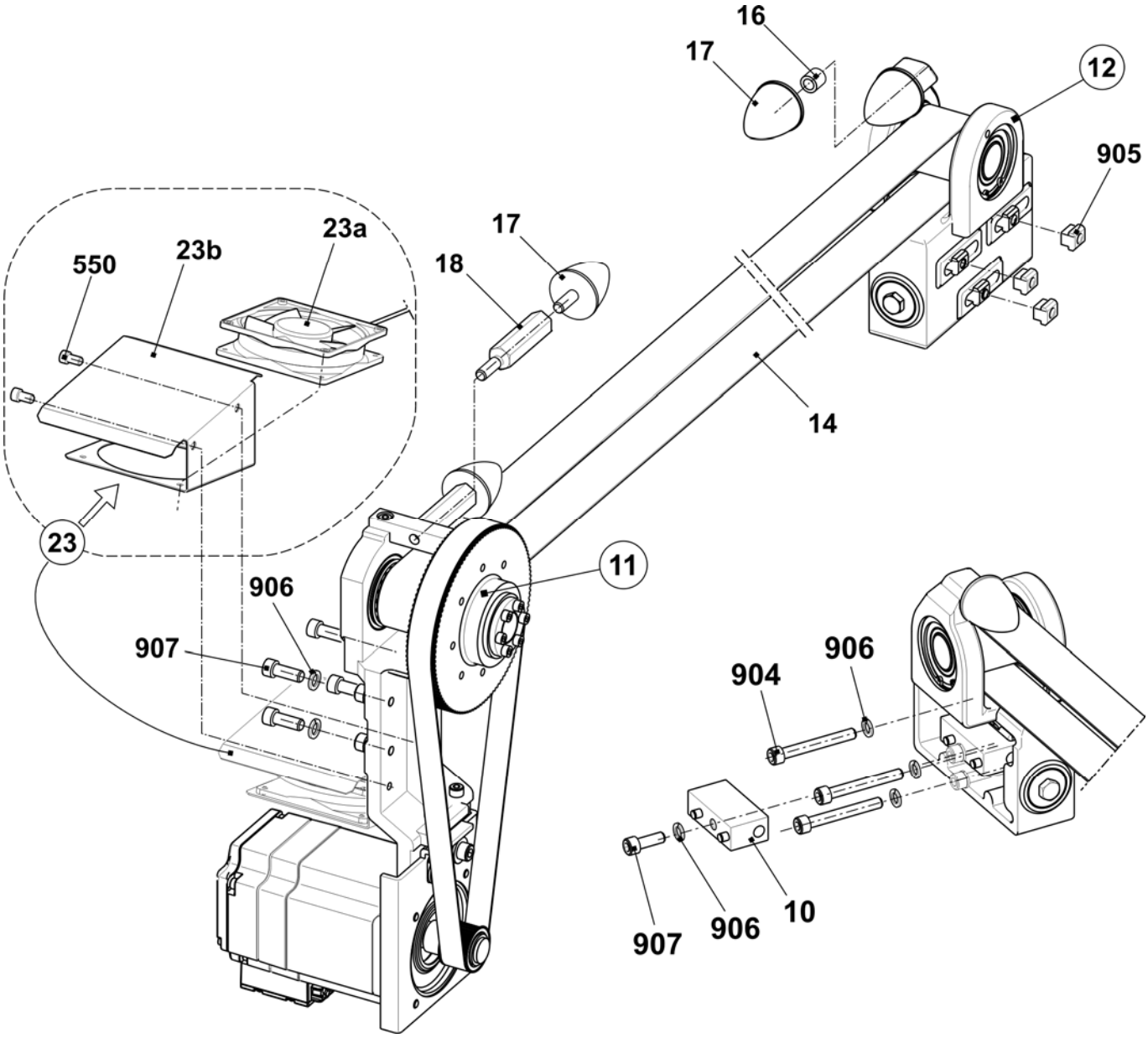

Motor and belt drive

Pos	*Designation*		*Ident No*	*Pos*	*Designation*		*Ident No*
Σ	**Drive unit complete**		**240 743**	2	Drive bearing complete		240 742
1	Drive unit		240 741		21	Drive bearing	241 654
	11	Drive motor complete	240 740		22	Timing belt pulley	240 616
	12	Motor plate	227 662		23	Pinion 57 AT10 18	242 039
	13	Toothed belt 250 HP-S5M 1050 NG	240 628		24	Support buffer	222 100
	510	Cap screw M8X16	023 629		520	Cap screw M8X35	020 144
500	Cap screw M10x25		020 157		521	Locking ring 68x2.5	022 914
501	Disc 10.5X25X2.5		022 178		522	Ball bearing 6207-2RS	022 915
					523	Tension set 30X55	023 208
					524	Cap screw M8X25 12.9	020 142

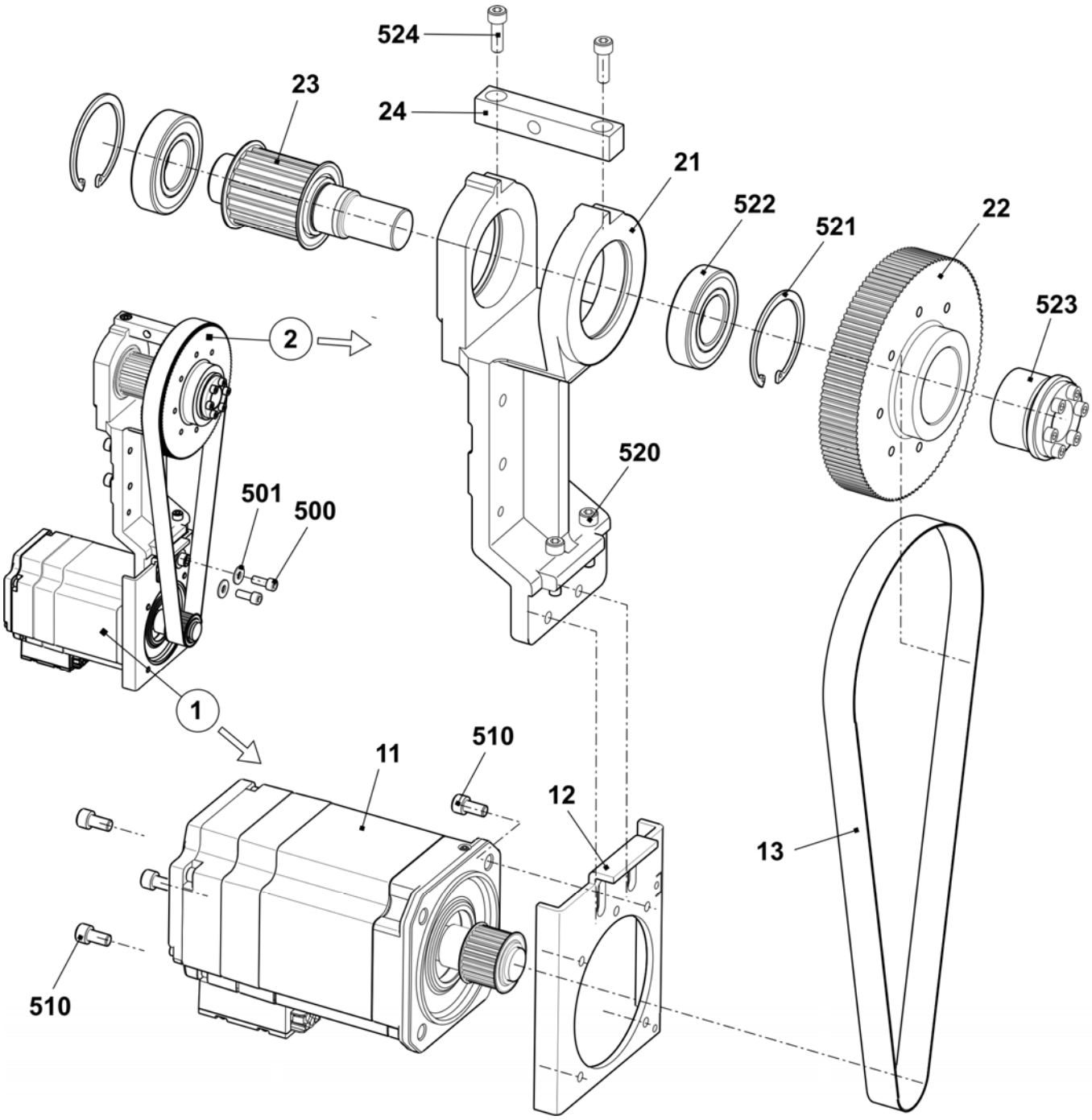

Tension bearing

Pos	*Designation*	*Ident No*	*Pos*	*Designation*	*Ident No*
Σ	**Tension bearing complete**	**241 655**	500	Ball bearing 6207-2RS	022 915
1	Housing tension bearing	241 656	501	Locking ring 72x2.5	022 914
2	Tension roller	222 055			

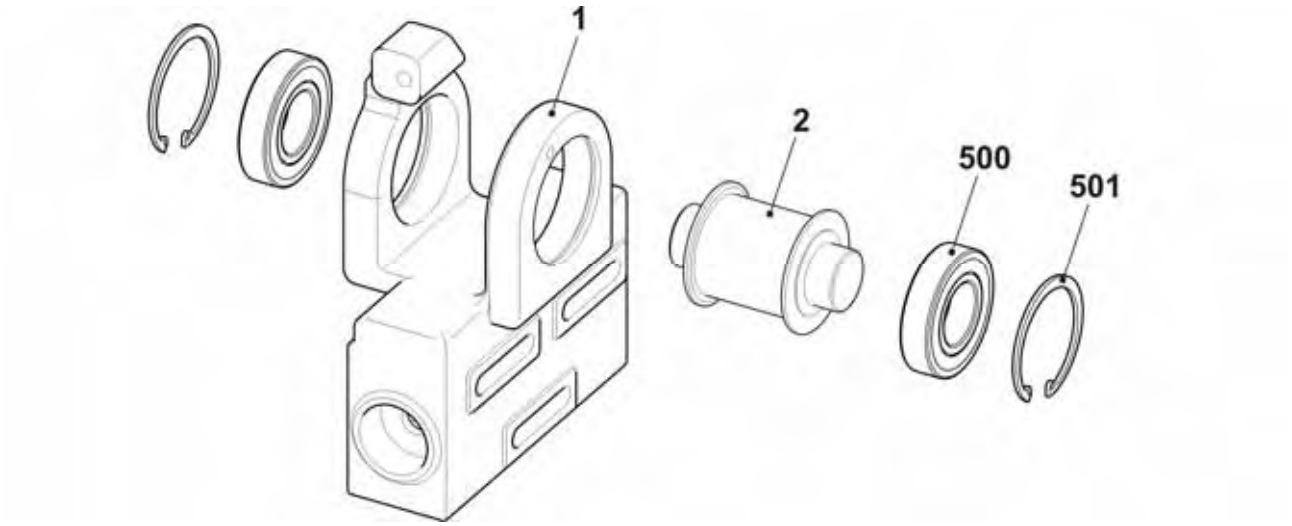

Energy chain and carriage driver

Pos	Designation		Ident No	Pos	Designation		Ident No
1	Energy chain 41 links		236 927	5	Continuation carriage driver complete		
4	Spacer		214 584		550	Cap screw M8x20-8.8	023 621
501	Cap screw M6x8		023 411		551	Circlip S6	022 752
502	Cap screw M6x12		020 134		552	Cap screw M8X30	020 143
503	Cap screw M6x16		020 135		553	Cap screw M6x16	020 135
5	Carriage driver complete		242 803		554	Cap screw M6x12	020 134
	51	Carriage driver 2 cam box	242 255		555	Countersunk screw M5x6	023 284
	52	Cable driver	251 262		556	Fixing element	026 489
	53	Clamping plate	226 111	6	Stop point complete		242 776
	54	Cover strip	230 698		61	Stop point	242 528
	55	Cable holder	204 688		62	Cable holder	244 330
	56	Cellular caoutchouc black	202 597				

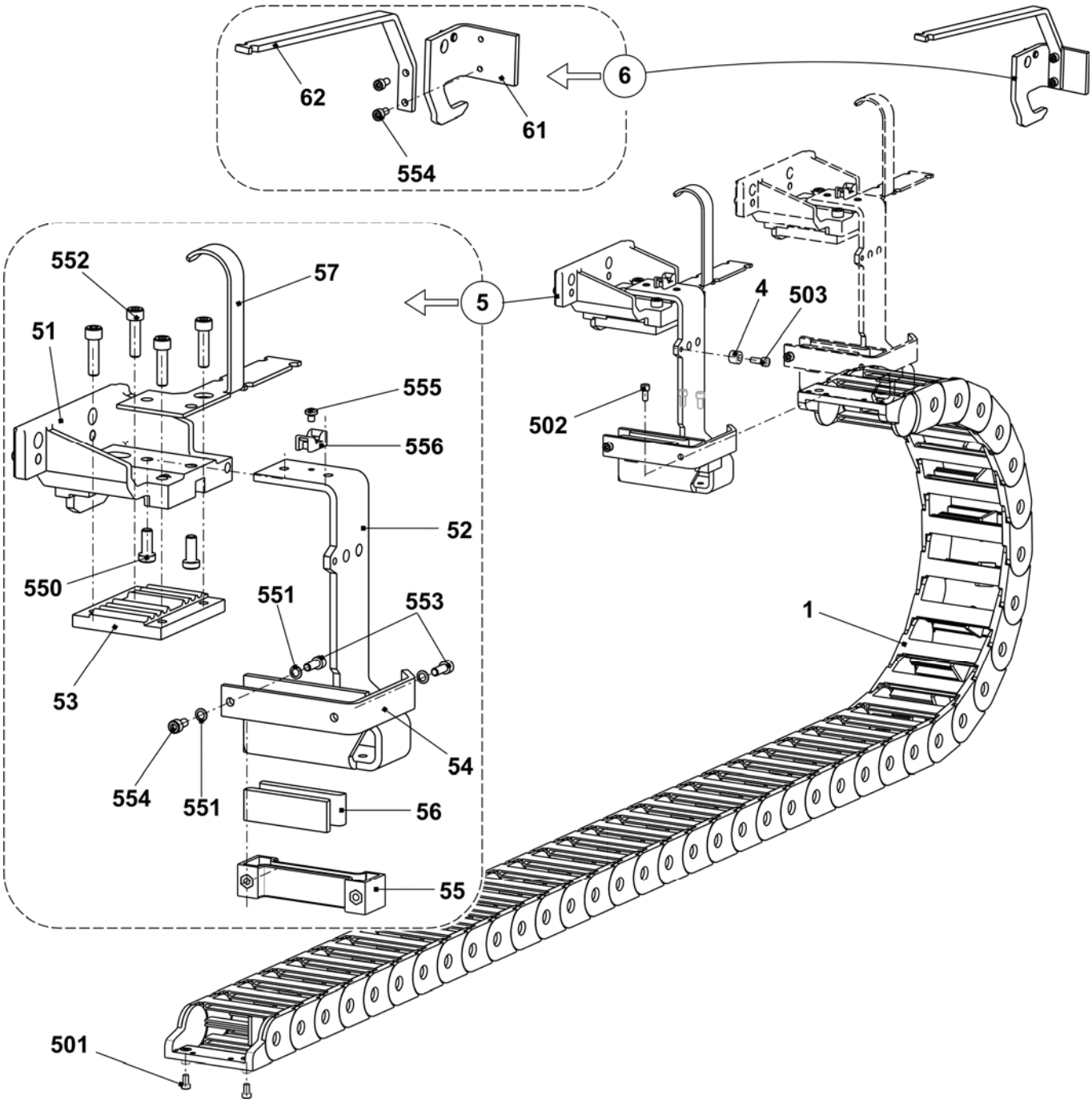

Racking

Racking drive

Pos	Designation	Ident No	Pos	Designation	Ident No
Σ	**Drive unit racking**	**241 920**			
1	Racking motor complete	241 454	504	Cap screw M5x12	020 132
2	Bearing	227 605	505	Washer	022 175
3	Spindle bearing complete	240 798	507	Shim 0.03x11x80	023 286
4	Card racking limit switch	229 396	508	Shim 0.05x11x80	023 287
5	Racking cover plate	230 048	509	Shim 0.03x15x85	023 162
6	Racking strip	241 921	510	Shim 0.05x15x85	023 163
7	Racking strip on the left	240 696	511	Shim 0.1x15x85	023 164
8	Guide strip	206 382	512	Shim 0.2x15x85	023 170
9	Toothed belt 150 S 5M 490	229 281	518	Shim 0.03x15x75	023 395
13	Switching metal plate	240 722	519	Shim 0.05x15x75	023 396
19	Stop screw	221 386	520	Shim 0.1x15x75	023 397
20	Cover plate	232 544	521	Shim 0.2x15x75	023 398
21	Distance bolt	232 543	900	Cap screw M6x12	022 795
500	Cap screw M4x4	022 767	901	Countersunk screw M6x10-12.9	023 183
501	Cap screw M6x16	023 116	902	Cap screw M8x35	020 144
503	Countersunk screw M6x10-12.9	023 183	903	Cap screw M8x25-12.9	020 142

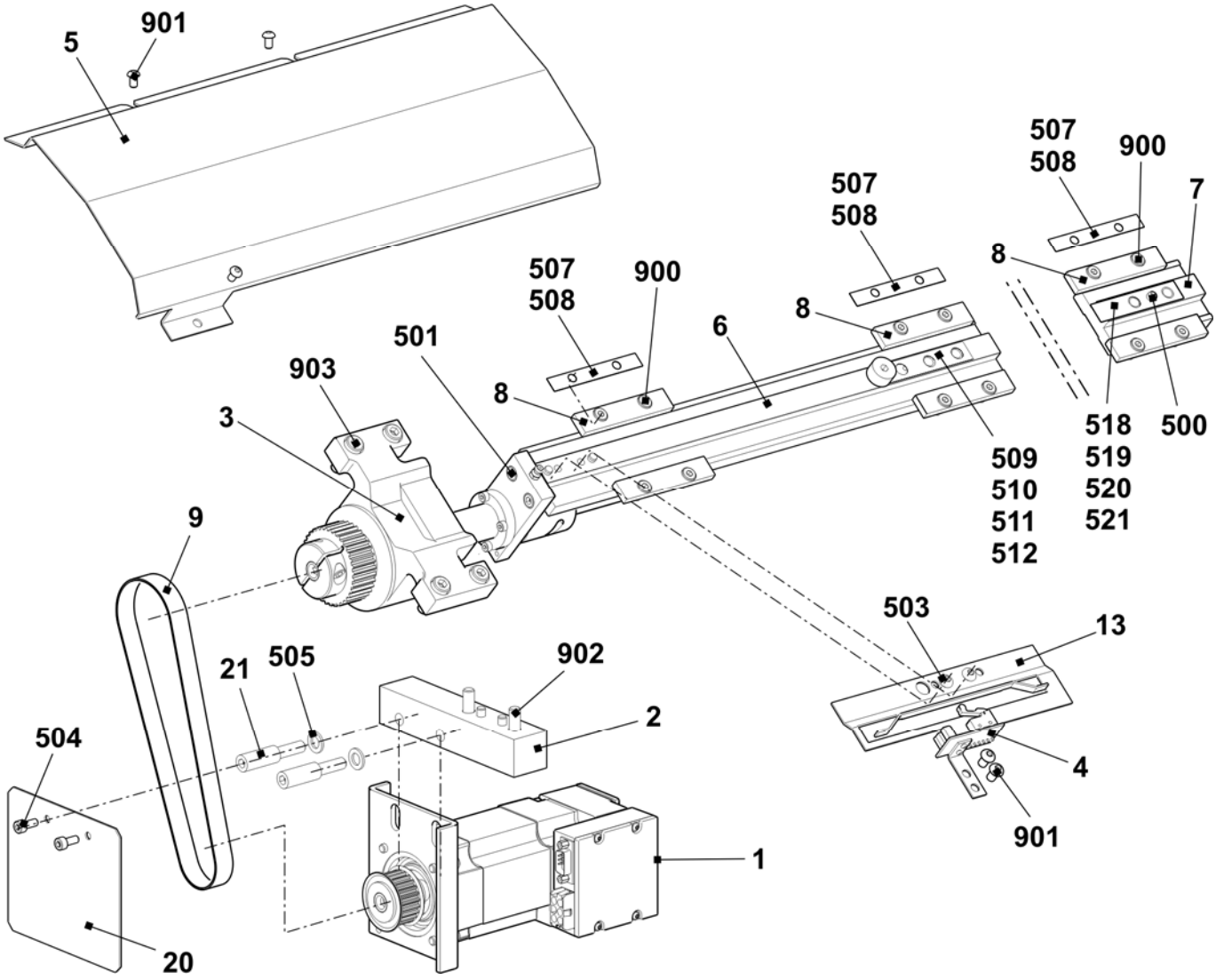

Needle beds

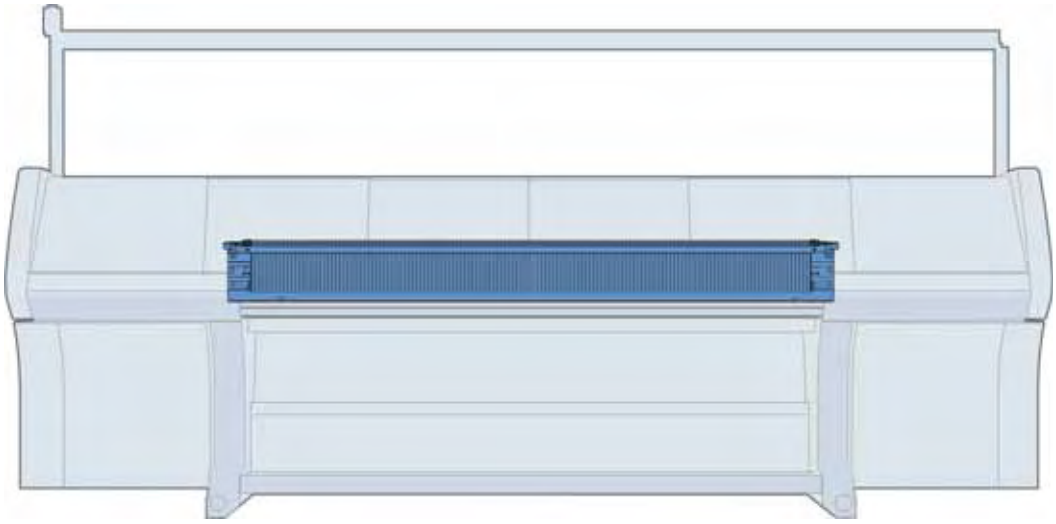

Needle bed E5

Pos	Designation	Ident No		Pos	Designation	Ident No
Σ	**Needle bed complete at the front and rear E5**	**238 217**		16	Needle rail on the left	205 311
2	Spring steel wire E4-5 Ø1.0	237 406		17	Needle rail on the right	205 312
3	Spring steel wire Ø2.0	223 854		18	Needle rail in the middle	237 387
4a	Needle E5-E6 with round hook	205 396		503	Cap screw M5x8-8.8	023 154
4b	Coupling part E4-E8	200 682		505	Cap screw M5x8	023 379
6	Intermediate slider with brake E5-E8	237 323		506	Set screw M6x12-45	022 400
7a	Selection jack E4-E8	200 687		507	Sprung thrust piece B-M10	023 177
7b	Selector spring E4-E8	200 690		509	Shim 0.02x18.5x34	023 194
10	Knock-over bit E5	204 996		510	Shim 0.03x18.5x34	023 195
11	Holding-down jack E5	205 031		511	Shim 0.05x18.5x34	023 196
12	Fixed wire Ø2.8	223 862		512	Shim 0.1x18.5x34	023 197
13	Support	206 352		513	Shim 0.2x18.5x34	023 253

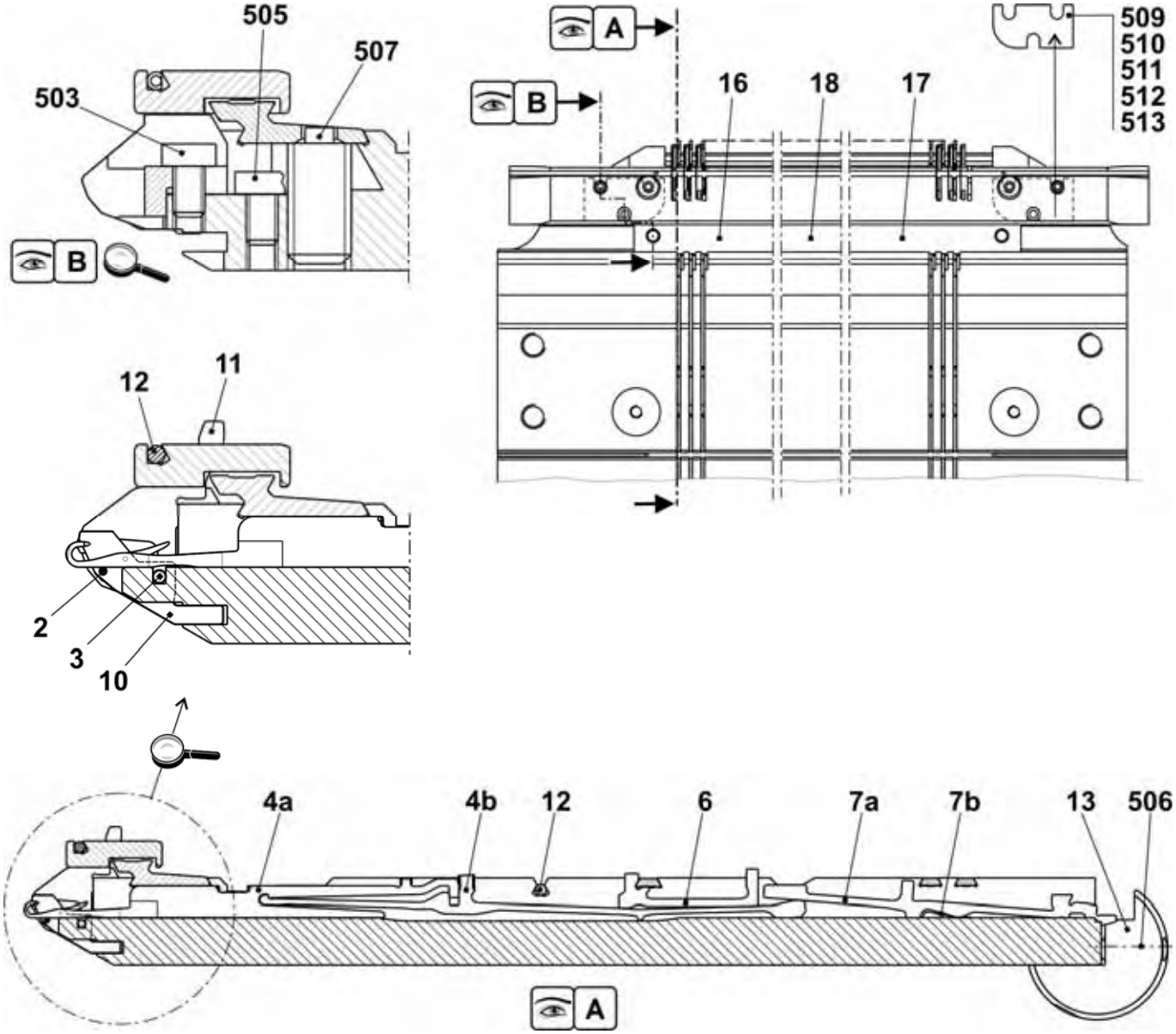

Continuation needle bed E5

Pos	Designation	Ident No	Pos	Designation	Ident No
Σ	**Needle bed complete at the front and rear E5**	**238 217**	501	Cap screw M5x10	022 918
1	Needle bed at the front + rear E5	238 005	502	Cap screw M6x25	020 137
2	Holding-down jack bed at the rear E5	238 027	504	Cap screw M5x22	023 193
3	Holding-down jack bed at the front E5	238 021	30*	Adjusting piece	206 375
4	Limiter on the left E4-E8	205 343	31*	Set screw complete	207 712
5	Limiter on the right E4-E8	205 344	40*	Disk brush	235 612
8	Cover rail at the rear	237 379	41*	Container, plate brush	233 012
9	Cover rail at the front E5	237 377	42*	Disk brush	235 612
10	Cover rail	237 382	520*	Cap screw M5x12	020 032
11	Cover rail	237 383	521*	Adjusting washer P6x12x0.3	023 540

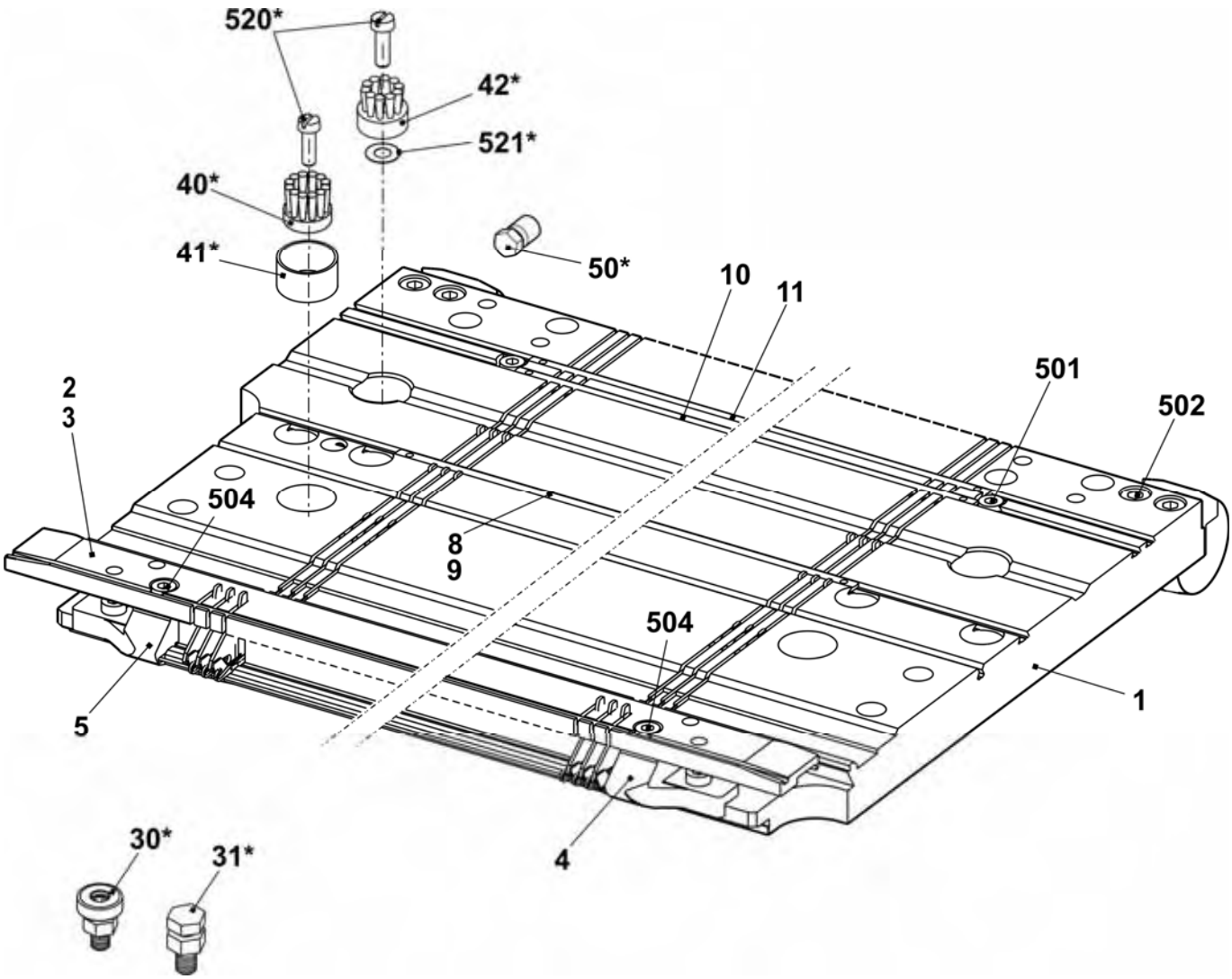

Needle bed E7

Pos	Designation	Ident No		Pos	Designation	Ident No
Σ	**Needle bed complete at the front + rear E7**	**238 218**		16	Needle rail on the left	205 311
2	Spring steel wire E7-8 Ø0.8	227 078		17	Needle rail on the right	205 312
3	Spring steel wire Ø2.0	223 854		18	Needle rail in the middle	237 387
4a	Needle E7 with round hook	205 397		503	Cap screw M5x8-8.8	023 154
4b	Coupling part E4-E8	200 682		505	Cap screw M5x8	023 379
6	Intermediate slider E5-E8	210 176		506	Set screw M6x12-45	022 400
7a	Selection jack E4-E8	200 687		507	Sprung thrust piece B-M10	023 177
7b	Selector spring E4-E8	200 690		509	Shim 0.02x18.5x34	023 194
10	Knock-over bit E7	207 055		510	Shim 0.03x18.5x34	023 195
11	Holding-down jack E7	205 032		511	Shim 0.05x18.5x34	023 196
12	Fixed wire Ø2.8	223 862		512	Shim 0.1x18.5x34	023 197
13	Support	206 352		513	Shim 0.2x18.5x34	023 253

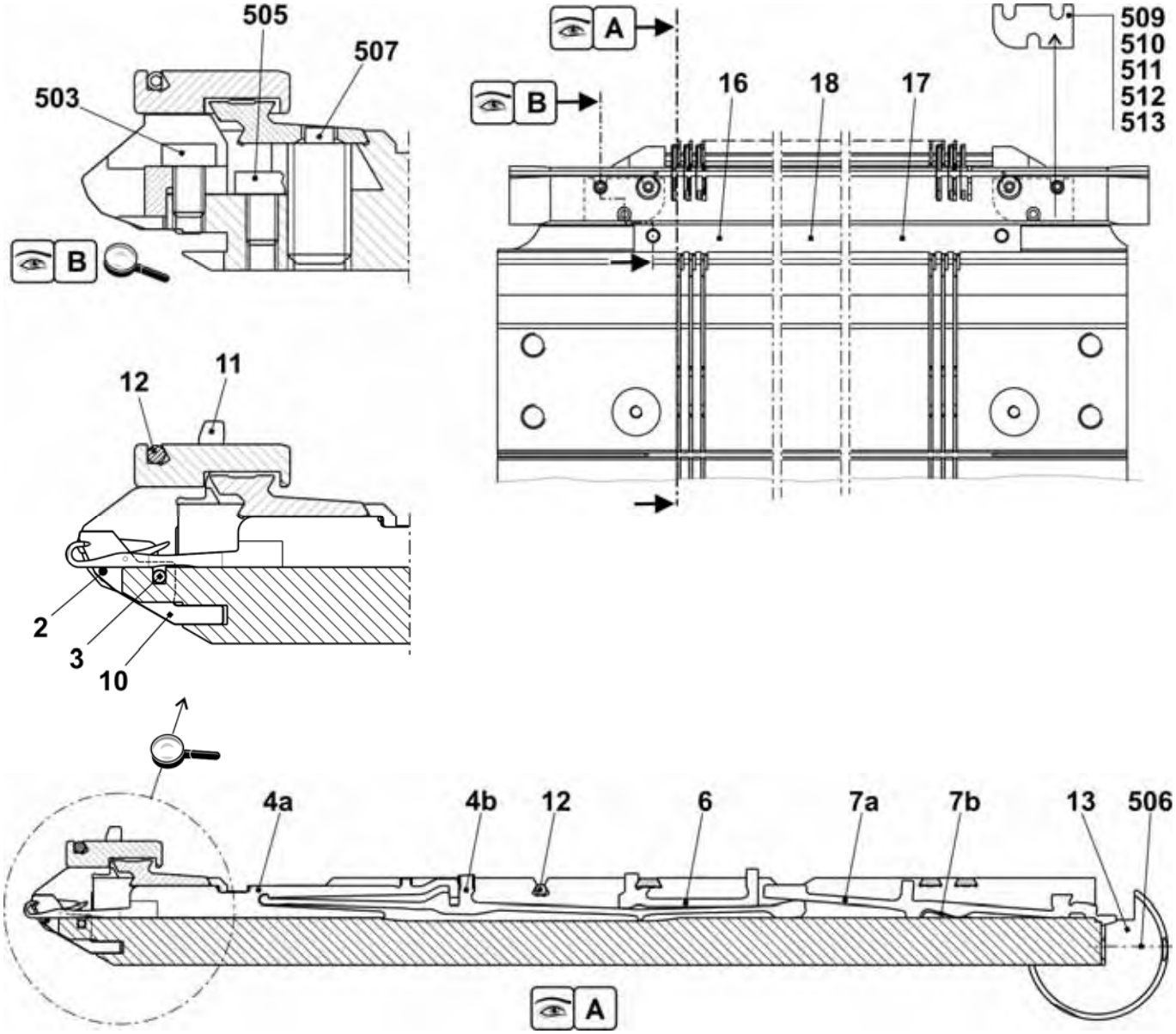

Continuation needle bed E7

Pos	Designation	Ident No	Pos	Designation	Ident No
Σ	**Needle bed complete at the front + rear E7**	**238 218**	501	Cap screw M5x10	022 918
1	Needle bed at the front + rear E7	238 006	502	Cap screw M6x25	020 137
2	Holding-down jack bed at the rear E7	238 028	504	Cap screw M5x22	023 193
3	Holding-down jack bed at the front E7	238 022	30*	Adjusting piece	206 375
4	Limiter on the left E4-E8	205 343	31*	Set screw complete	207 712
5	Limiter on the right E4-E8	205 344	40*	Disk brush	235 612
8	Cover rail at the rear	237 379	41*	Container, plate brush	233 012
9	Cover rail at the front E3,5.2	238 018	42*	Disk brush	235 612
10	Cover rail	237 382	520*	Cap screw M5x12	020 032
11	Cover rail	237 383	521*	Adjusting washer P6x12x0.3	023 540

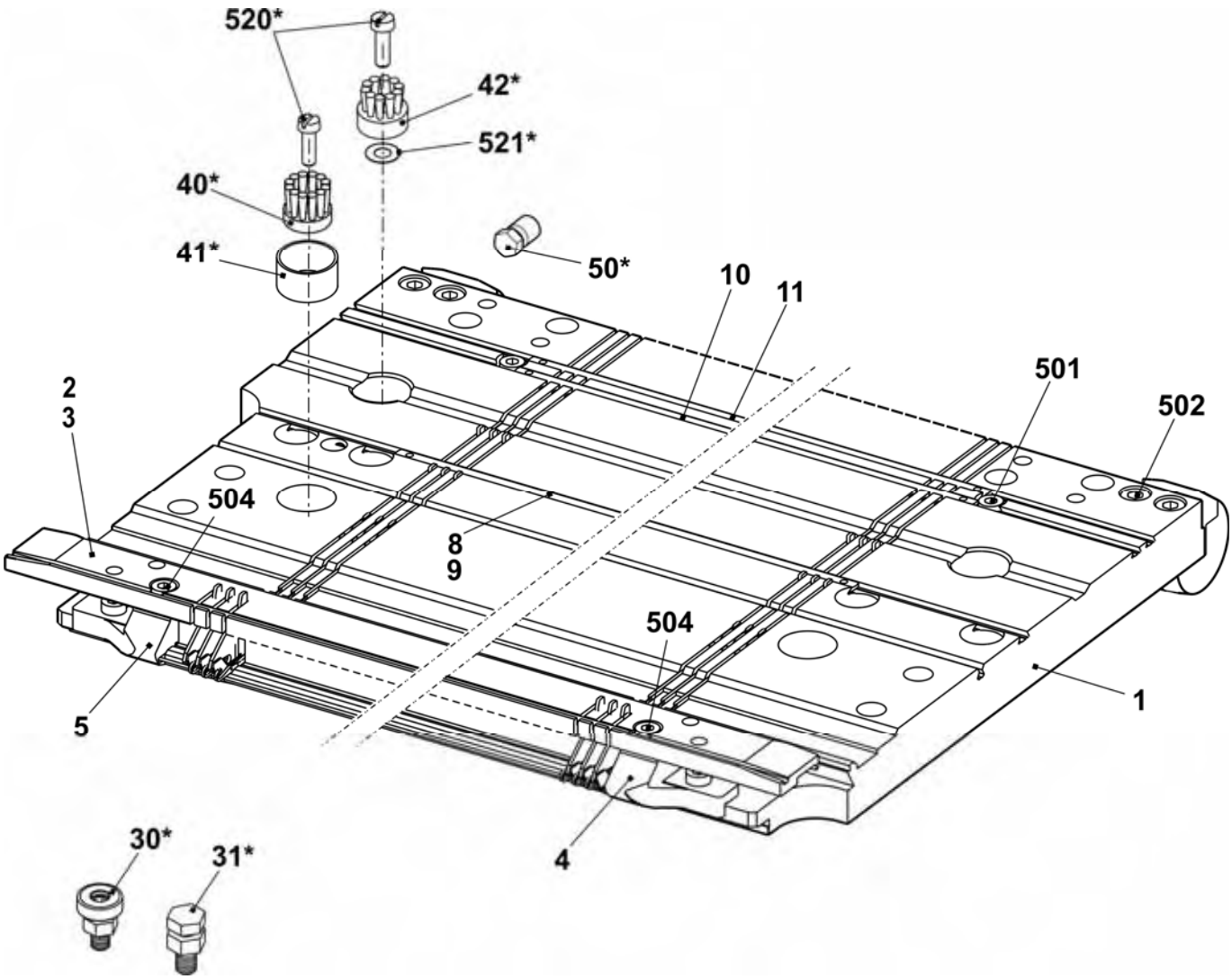

Needle bed E8

Pos	Designation	Ident No	Pos	Designation	Ident No
Σ	**Needle bed complete at the front and rear E8**	**238 219**	16	Needle rail on the left	205 311
2	Spring steel wire E7-8 Ø0.8	227 078	17	Needle rail on the right	205 312
3	Spring steel wire Ø2.0	223 854	18	Needle rail in the middle	237 387
4a	Needle E8 with round hook	208 745	503	Cap screw M5x8-8.8	023 154
4b	Coupling part E4-E8	200 682	505	Cap screw M5x8	023 379
6	Intermediate slider E5-E8	237 323	506	Set screw M6x12-45	022 400
7a	Selection jack E4-E8	200 687	507	Sprung thrust piece B-M10	023 177
7b	Selector spring E4-E8	200 690	509	Shim 0.02x18.5x34	023 194
10	Knock-over bit E8	207 054	510	Shim 0.03x18.5x34	023 195
11	Holding-down jack E8	205 028	511	Shim 0.05x18.5x34	023 196
12	Fixed wire Ø2.8	223 862	512	Shim 0.1x18.5x34	023 197
13	Support	206 352	513	Shim 0.2x18.5x34	023 253

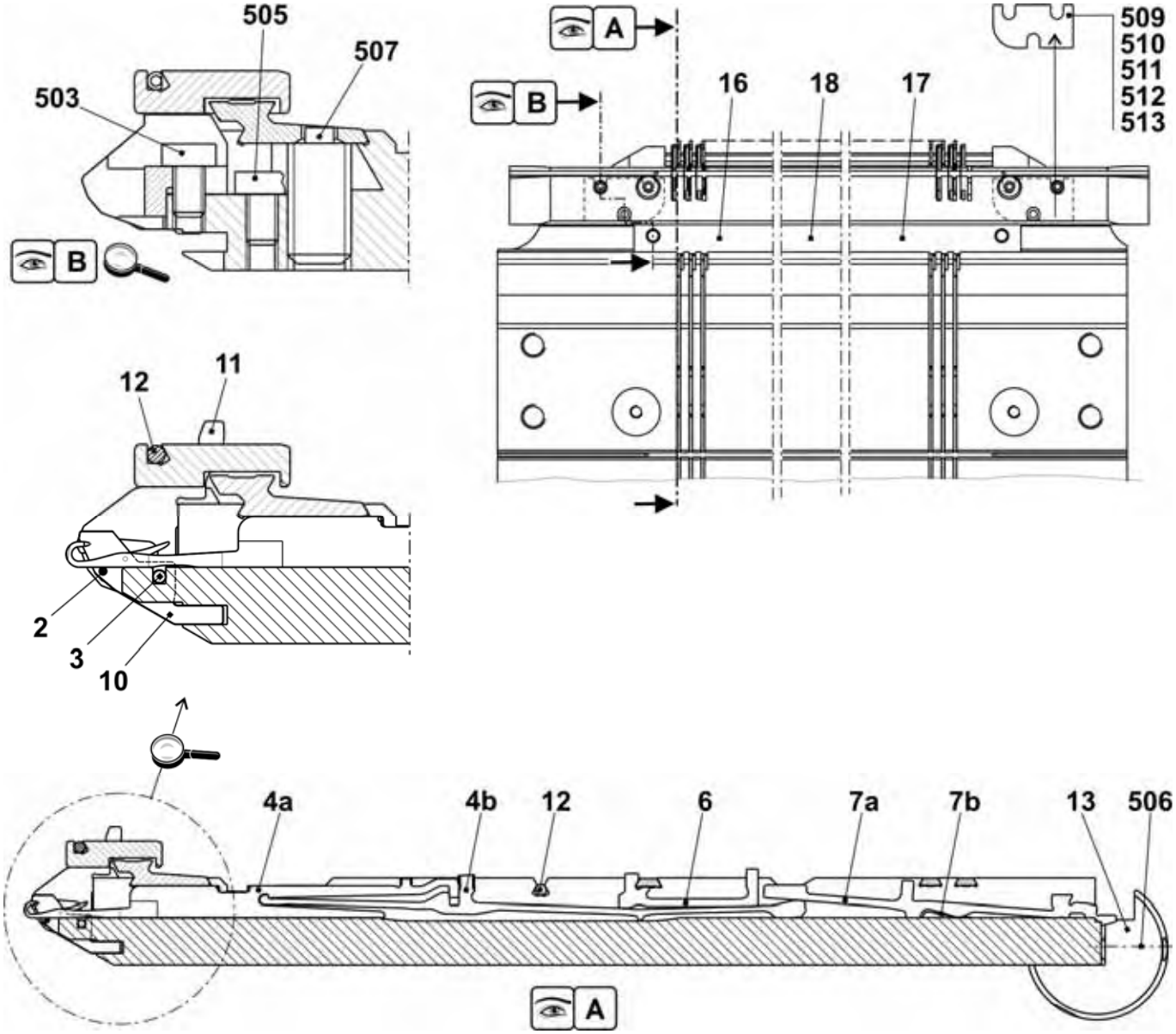

Continuation needle bed E8

Pos	Designation	Ident No	Pos	Designation	Ident No
Σ	**Needle bed complete at the front and rear E8**	**238 219**	501	Cap screw M5x10	022 918
1	Needle bed at the front + rear E8	238 007	502	Cap screw M6x25	020 137
2	Holding-down jack bed at the rear E8	238 029	504	Cap screw M5x22	023 193
3	Holding-down jack bed at the front E8	238 023	30*	Adjusting piece	206 375
4	Limiter on the left E4-E8	205 343	31*	Set screw complete	207 712
5	Limiter on the right E4-E8	205 344	40*	Disk brush	235 612
8	Cover rail at the rear	237 379	41*	Container, plate brush	233 012
9	Cover rail at the front E8	238 015	42*	Disk brush	235 612
10	Cover rail	237 382	520*	Cap screw M5x12	020 032
11	Cover rail	237 383	521*	Adjusting washer P6x12x0.3	023 540

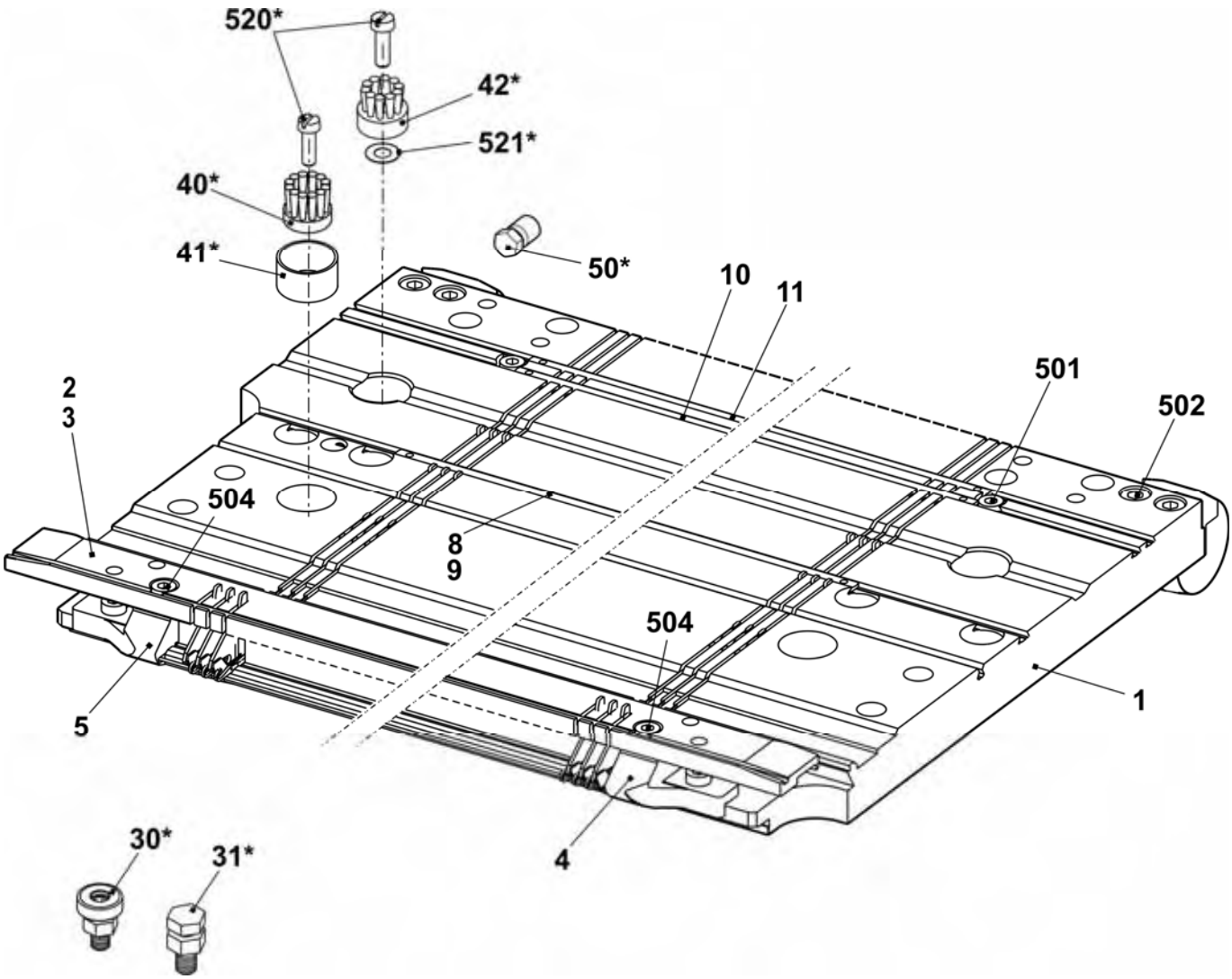

Needle bed E10

Pos	Designation	Ident No		Pos	Designation	Ident No
Σ	**Needle bed complete at the front and rear E10**	**241 680**		16	Needle rail on the left	205 311
2	Spring steel wire E10-14 Ø0.6	223 849		17	Needle rail on the right	205 312
3	Spring steel wire Ø2.0	223 854		18	Needle rail in the middle	237 387
4a	Needle E10 with round hook	205 398		503	Cap screw M5x8-8.8	023 154
4b	Coupling part E10-12	200 683		505	Cap screw M5x8	023 379
6	Intermediate slider with brake E10	237 324		506	Set screw M6x12-45	022 400
7a	Selector spring E10-12	200 691		507	Sprung thrust piece B-M10	023 177
7b	Selection jack E10-12	200 688		509	Shim 0.02x18.5x34	023 194
10	Knock-over bit E10	239 756		510	Shim 0.03x18.5x34	023 195
11	Holding-down jack trick wall E10	239 815		511	Shim 0.05x18.5x34	023 196
12	Fixed wire Ø2.8	223 862		512	Shim 0.1x18.5x34	023 197
13	Support	206 352		513	Shim 0.2x18.5x34	023 253

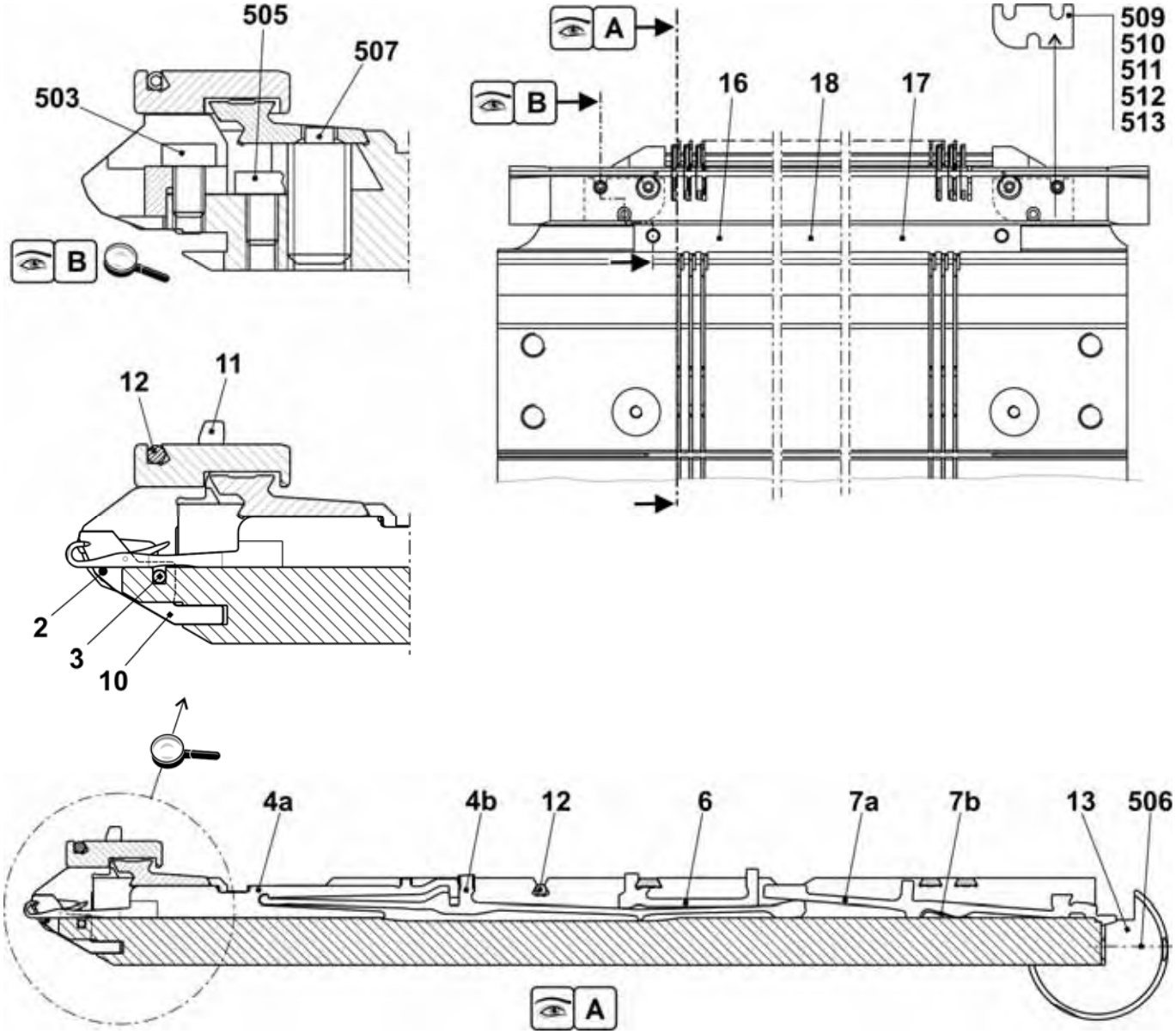

Continuation needle bed E10

Pos	Designation	Ident No	Pos	Designation	Ident No
Σ	**Needle bed complete at the front and rear E10**	**241 680**	501	Cap screw M5x10	022 918
1	Needle bed at the front + rear E10	241 671	502	Cap screw M6x25	020 137
2	Holding-down jack bed at the rear E10	238 030	504	Cap screw M5x22	023 193
3	Holding-down jack bed at the front E10	238 024	30*	Adjusting piece	206 375
4	Limiter on the left E10-14	205 764	31*	Set screw complete	207 712
5	Limiter on the right E10-14	205 765	40*	Disk brush	235 612
8	Cover rail at the rear	237 379	41*	Container, plate brush	233 012
9	Cover rail at the front E5.2	237 506	42*	Disk brush	235 612
10	Cover rail	237 382	520*	Cap screw M5x12	020 032
11	Cover rail	237 383	521*	Adjusting washer P6x12x0.3	023 540

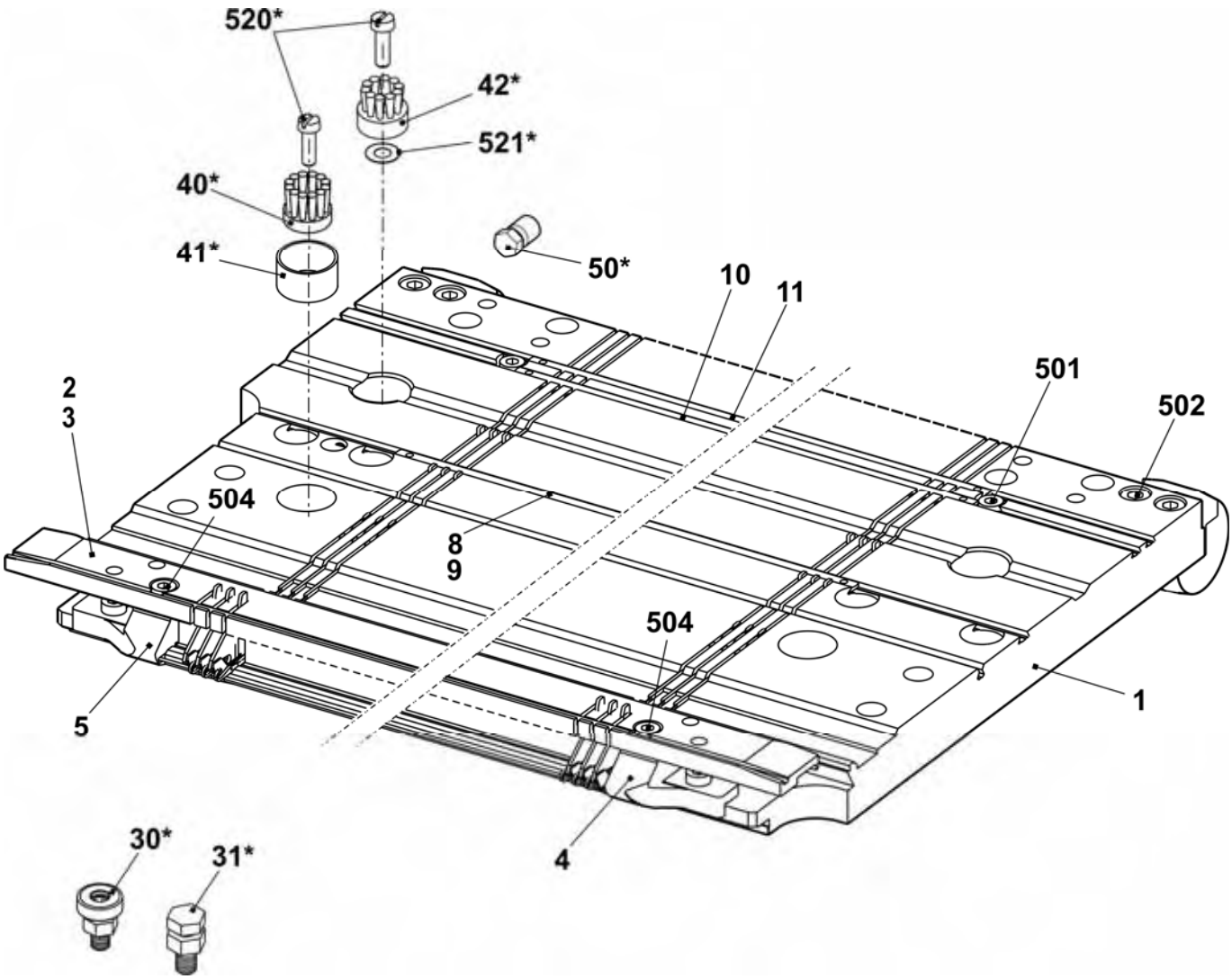

Needle bed E12

Pos	Designation	Ident No		Pos	Designation	Ident No
Σ	**Needle bed complete at the front and rear E12**	**238 210**		23	Needle rail on the left	205 311
4	Main trick wall E12	205 355		24	Needle rail on the right	205 312
6	Fixed wire Ø3.4	223 868		26	Support	206 352
7	Spring steel wire E10-14 Ø0.6	223 849		28	Needle rail in the middle	237 387
9a	Needle E12	204 009		501	Cap screw M5x8-8.8 M	023 154
9b	Coupling part E10-12	200 683		504	Cap screw M5x12-8.8	022 943
11	Intermediate slider with brake E10	237 324		506	Set screw M6x12-45	022 400
12a	Selection jack E10-12	200 688		507	Sprung thrust piece B-M10	023 177
12b	Selector spring E10-12	200 691		508	Shim 0.02x18.5x34	023 194
13	Knock-over bit E12	205 013		509	Shim 0.03x18.5x34	023 195
14	Holding-down jack trick wall E12	227 821		510	Shim 0.05x18.5x34	023 196
21	Fixed wire Ø2.8	223 862		511	Shim 0.1x18.5x34	023 197
22	Spring steel wire Ø1.95	223 852		512	Shim 0.2x18.5x34	023 253

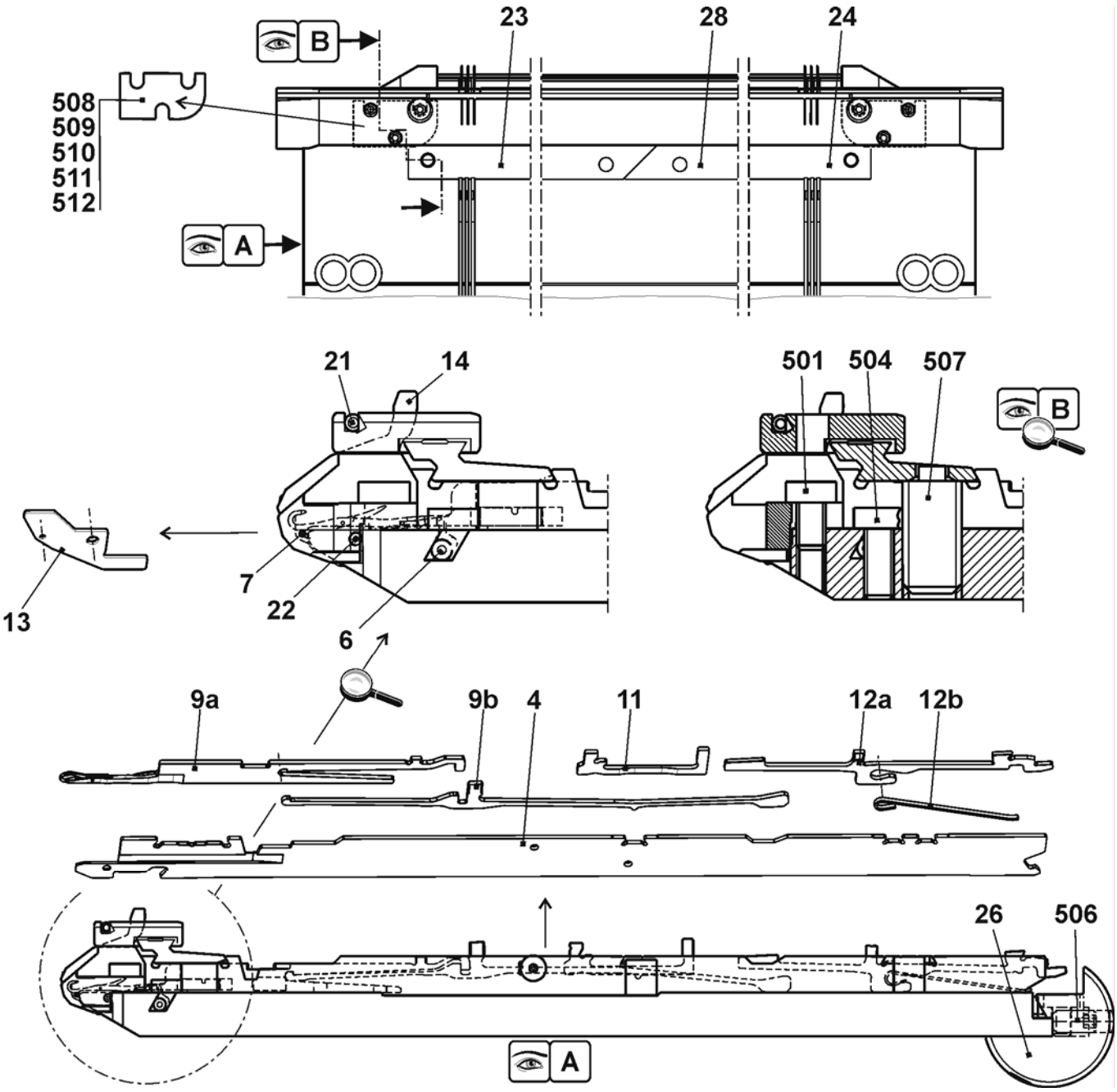

Continuation needle bed E12

Pos	Designation	Ident No	Pos	Designation	Ident No
Σ	**Needle bed complete at the front and rear E12**	**238 210**	27	Stop screw	214 039
1	Needle bed at the front and rear E6.2	237 485	500	Cap screw M6X14	022 658
2	Holding-down jack bed at the front E12	238 025	502	Cap screw M5x8	023 379
3	Holding-down jack bed at the rear E12	238 031	503	Cap screw M5x22	023 193
5	Pressure slide	237 509	505	Set screw M3.5x3-1	020 512
8	Spring steel wire Ø2.0	223 854	30*	Adjusting piece	206 375
15	Limiter on the left E10-14	205 764	31*	Set screw complete	207 712
16	Limiter on the right E10-14	205 765	40*	Disk brush	235 612
17	Cover rail at the rear	237 379	41*	Container disk brush	233 012
18	Cover rail at the front E6.2	237 507	42*	Disk brush	235 612
19	Cover rail	237 382	520*	Cap screw M5x12	020 032
20	Cover rail	237 383	521*	Adjusting washer P6x12x0.3	023 540
25	Bush	206 090			

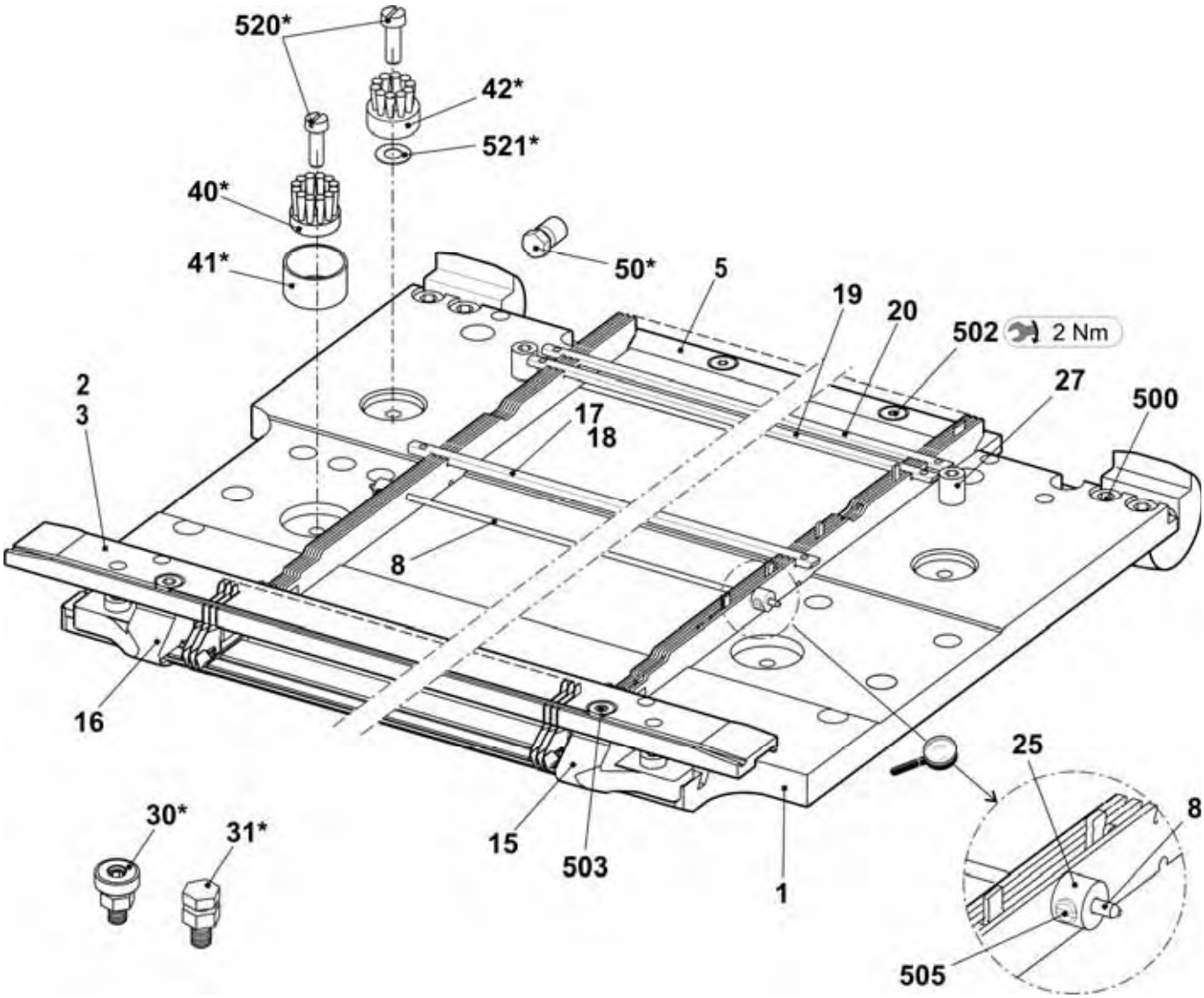

Needle bed E14

Pos	Designation	Ident No		Pos	Designation	Ident No
Σ	**Needle bed complete at the front + rear E14**	**238 211**		23	Needle rail on the left	205 311
4	Main trick wall E14	209 574		24	Needle rail on the right	205 312
6	Fixed wire Ø3.4	223 868		26	Support	206 352
7	Spring steel wire E10-14 Ø0.6	223 849		28	Needle rail in the middle	237 387
9a	Needle E14	209 614		501	Cap screw M5x8-8.8 M	023 154
9b	Coupling part E14	209 633		504	Cap screw M5x12-8.8	022 943
11	Intermediate slider with brake E14	237 373		506	Set screw M6x12-45	022 400
12	Selection jack with spring E14	224 725		507	Sprung thrust piece B-M10	023 177
------				508	Shim 0.02x18.5x34	023 194
13	Knock-over bit E14	209 649		509	Shim 0.03x18.5x34	023 195
14	Holding-down jack trick wall E14	235 262		510	Shim 0.05x18.5x34	023 196
21	Fixed wire Ø2.8	223 862		511	Shim 0.1x18.5x34	023 197
22	Spring steel wire Ø1.95	223 852		512	Shim 0.2x18.5x34	023 253

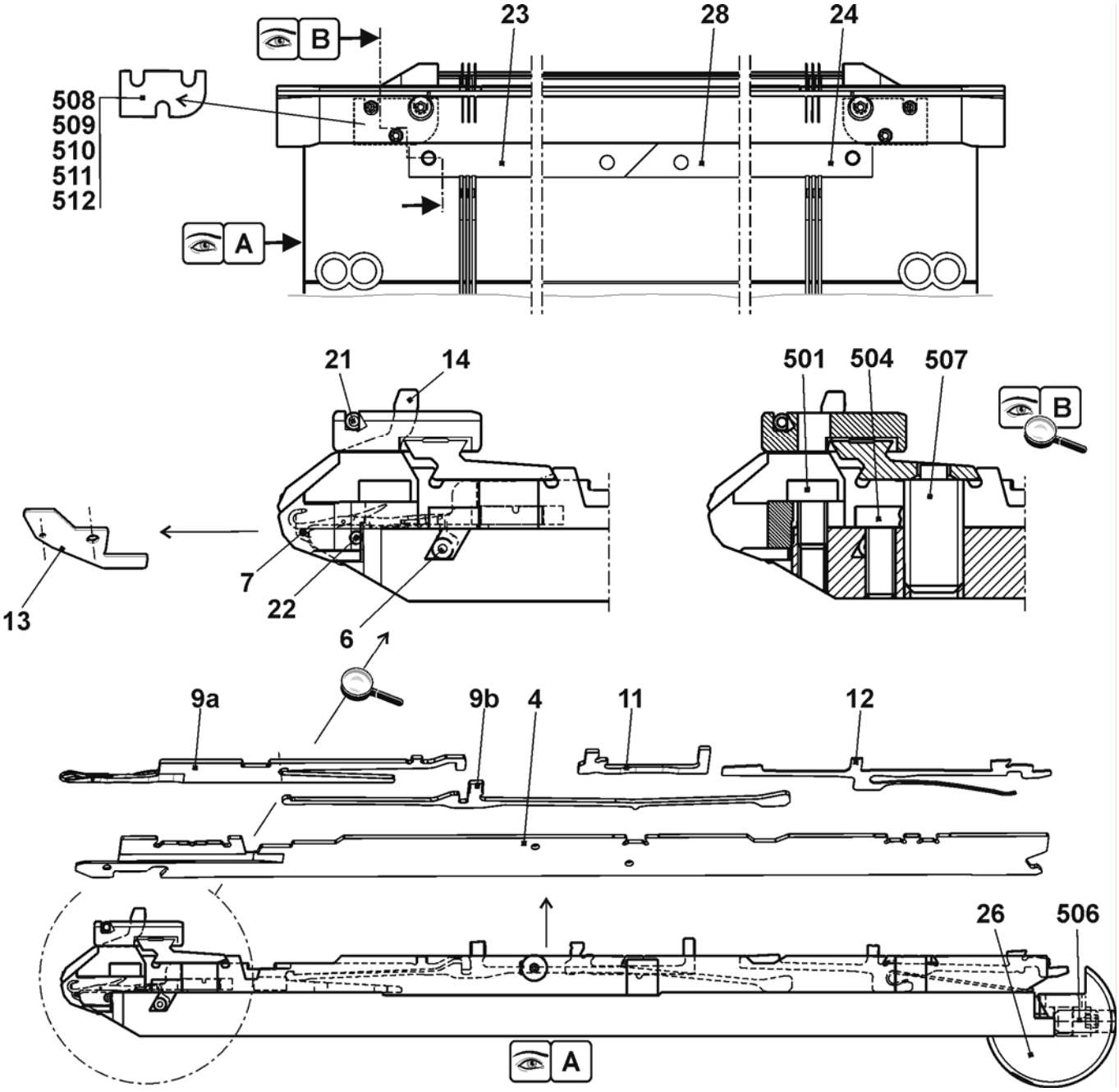

Continuation needle bed E14

Pos	Designation	Ident No		Pos	Designation	Ident No
Σ	**Needle bed complete at the front + rear E14**	**238 211**		27	Stop screw	214 039
1	Needle bed at the front + rear E7.2	237 486		500	Cap screw M6X14	022 658
2	Holding-down jack bed at the front E14	238 026		502	Cap screw M5x8	023 379
3	Holding-down jack bed at the rear E14	238 032		503	Cap screw M5x22	023 193
5	Pressure slide	237 509		505	Set screw M3.5x3-1	020 512
8	Spring steel wire Ø2.0	223 854		30*	Adjusting piece	206 375
15	Limiter on the left E10-14	205 764		31*	Set screw complete	207 712
16	Limiter on the right E10-14	205 765		40*	Disk brush	235 612
17	Cover rail at the rear	237 379		41*	Container disk brush	233 012
18	Cover rail at the front E7.2	237 508		42*	Disk brush	235 612
19	Cover rail	237 382		520*	Cap screw M5x12	020 032
20	Cover rail	237 383		521*	Adjusting washer P6x12x0.3	023 540
25	Bush	206 090				

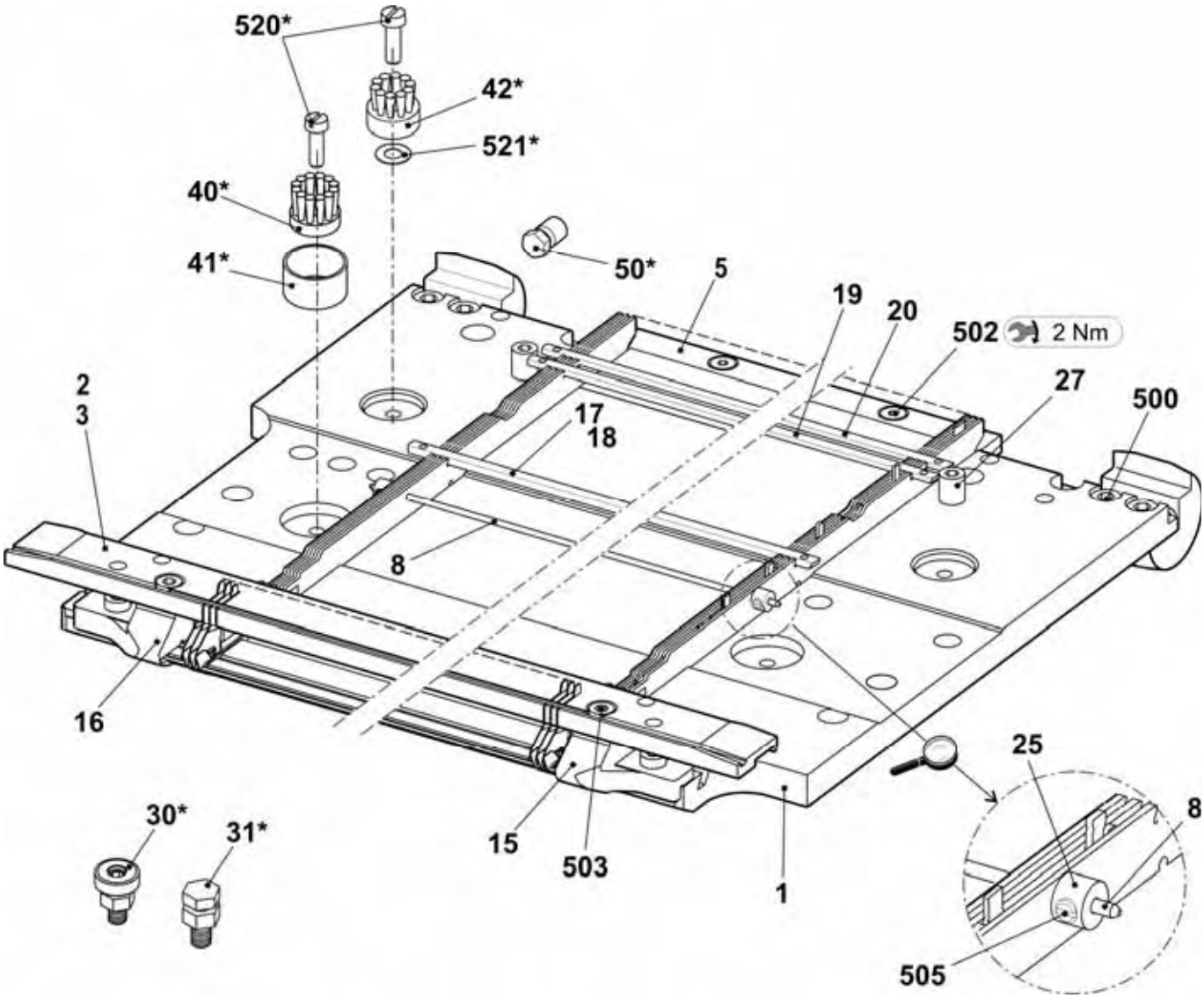

Needle bed E16

Pos	Designation	Ident No	Pos	Designation	Ident No
Σ	**Needle bed complete at the front + rear E16**	**251 114**			
4	Main trick wall E16	245 319	24	Needle rail on the right	205 312
6	Fixed wire Ø3.4	223 868	26	Support	206 352
7	Spring steel wire Ø0.5	238 942	28	Needle rail in the middle	237 387
8	Spring steel wire Ø2	251 085	501	Cap screw M5x8-8.8 M	023 154
9a	Needle E16-18	232 243	504	Cap screw M5x12-8.8	022 943
9b	Coupling part E16-20	220 382	506	Set screw M6x12-45	022 400
11	Intermediate slider with brake E16	237 326	507	Sprung thrust piece B-M10	023 177
12	Selection jack E16-20	222 265	508	Shim 0.02x18.5x34	023 194
13	Knock-over bit E16	222 503	509	Shim 0.03x18.5x34	023 195
14	Holding-down jack E16	222 504	510	Shim 0.05x18.5x34	023 196
21	Fixed wire Ø2.8	238 950	511	Shim 0.1x18.5x34	023 197
23	Needle rail on the left	205 311	512	Shim 0.2x18.5x34	023 253

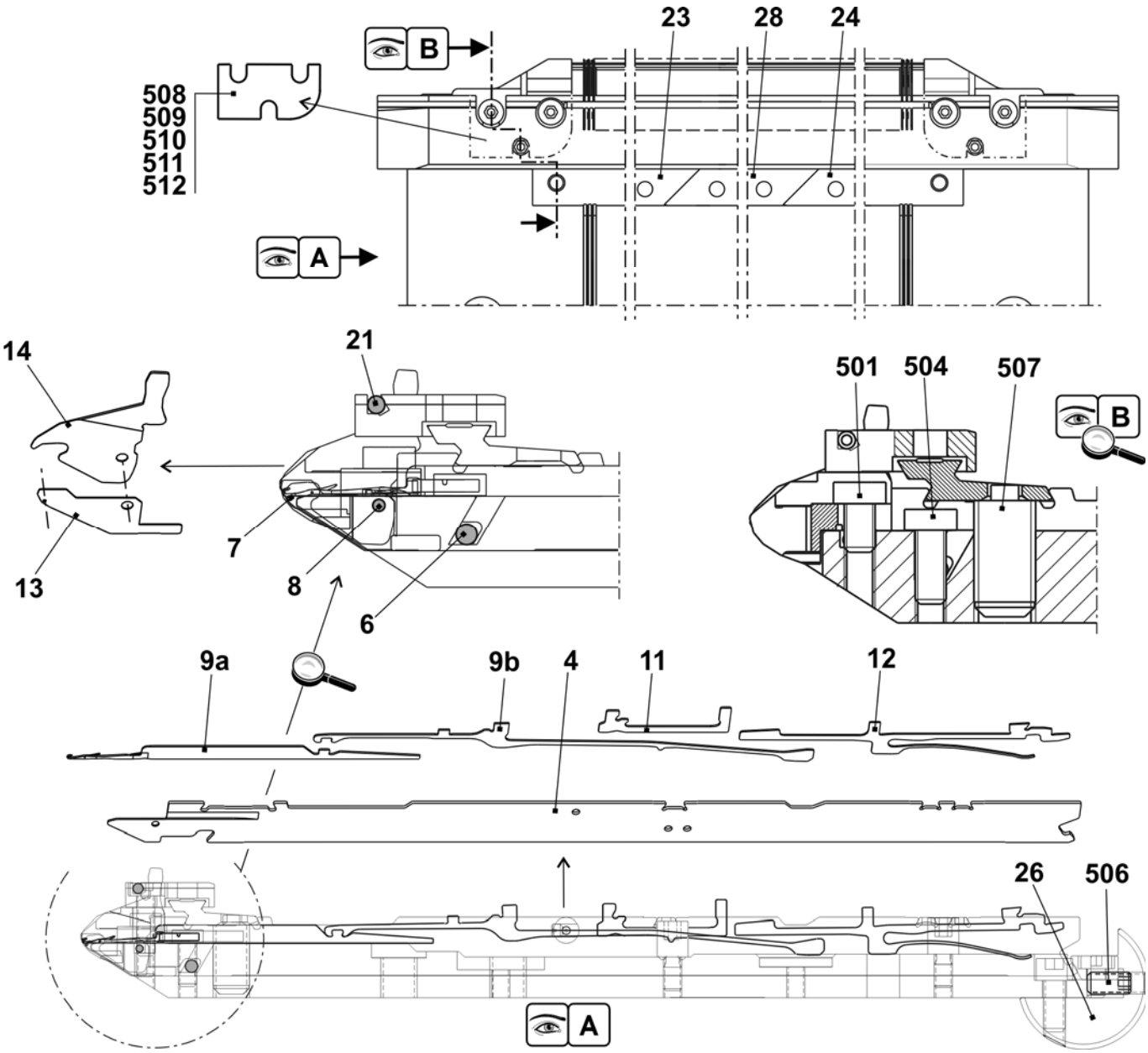

Continuation needle bed E16

Pos	Designation	Ident No		Pos	Designation	Ident No
Σ	**Needle bed complete at the front + rear E16**	**251 114**		27	Stop screw	214 039
1	Needle bed at the front rear E16	251 077		500	Cap screw M6X14	022 658
2	Holding-down jack bed at the front E16	238 917		502	Cap screw M5x8	023 379
3	Holding-down jack bed at the rear E16	238 920		503	Cap screw M5x22	023 193
5	Pressure slide	237 509		505	Set screw M3.5x3-1	020 512
8	Spring steel wire Ø2.0	251 085		30*	Adjusting piece	206 375
15	Limiter on the left E16-E20	220 821		31*	Set screw complete	207 712
16	Limiter on the right E16-E20	220 822		40*	Disk brush	235 612
17	Cover rail at the rear	237 379		41*	Container disk brush	233 012
18	Cover rail at the front E16	238 925		42*	Disk brush	235 612
19	Cover rail	237 382		520*	Cap screw M5x12	020 032
20	Cover rail	237 383		521*	Adjusting washer P6x12x0.3	023 540
25	Bush	206 090				

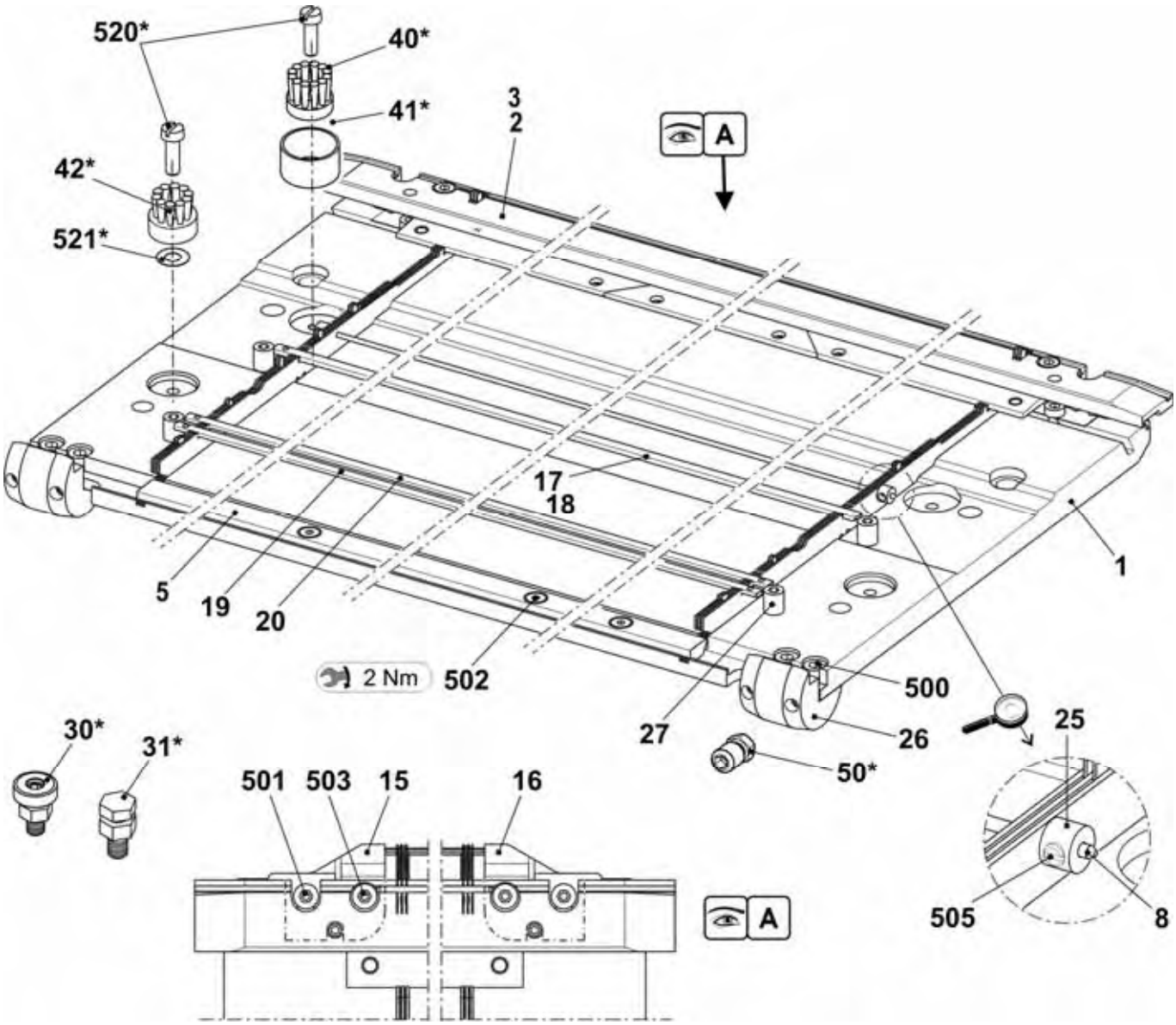

Needle bed E18

Pos	Designation	Ident No	Pos	Designation	Ident No
Σ	**Needle bed complete at the front and rear E18**	**251 115**			
4	Main trick wall E18	251 051	24	Needle rail on the right	205 312
6	Fixed wire Ø3.4	223 868	26	Support	206 352
7	Spring steel wire Ø0.5	238 942	28	Needle rail in the middle	237 387
8	Spring steel wire Ø2	251 085	501	Cap screw M5x8-8.8 M	023 154
9a	Needle E18	239 527	504	Cap screw M5x12-8.8	022 943
9b	Coupling part E16-20	220 382	506	Set screw M6x12-45	022 400
11	Intermediate slider with brake E16	237 326	507	Sprung thrust piece B-M10	023 177
12	Selection jack E16-20	222 265	508	Shim 0.02x18.5x34	023 194
13	Knock-over bit E18	220 764	509	Shim 0.03x18.5x34	023 195
14	Holding-down jack E18	220 770	510	Shim 0.05x18.5x34	023 196
21	Fixed wire Ø2.8	238 950	511	Shim 0.1x18.5x34	023 197
23	Needle rail on the left	205 311	512	Shim 0.2x18.5x34	023 253

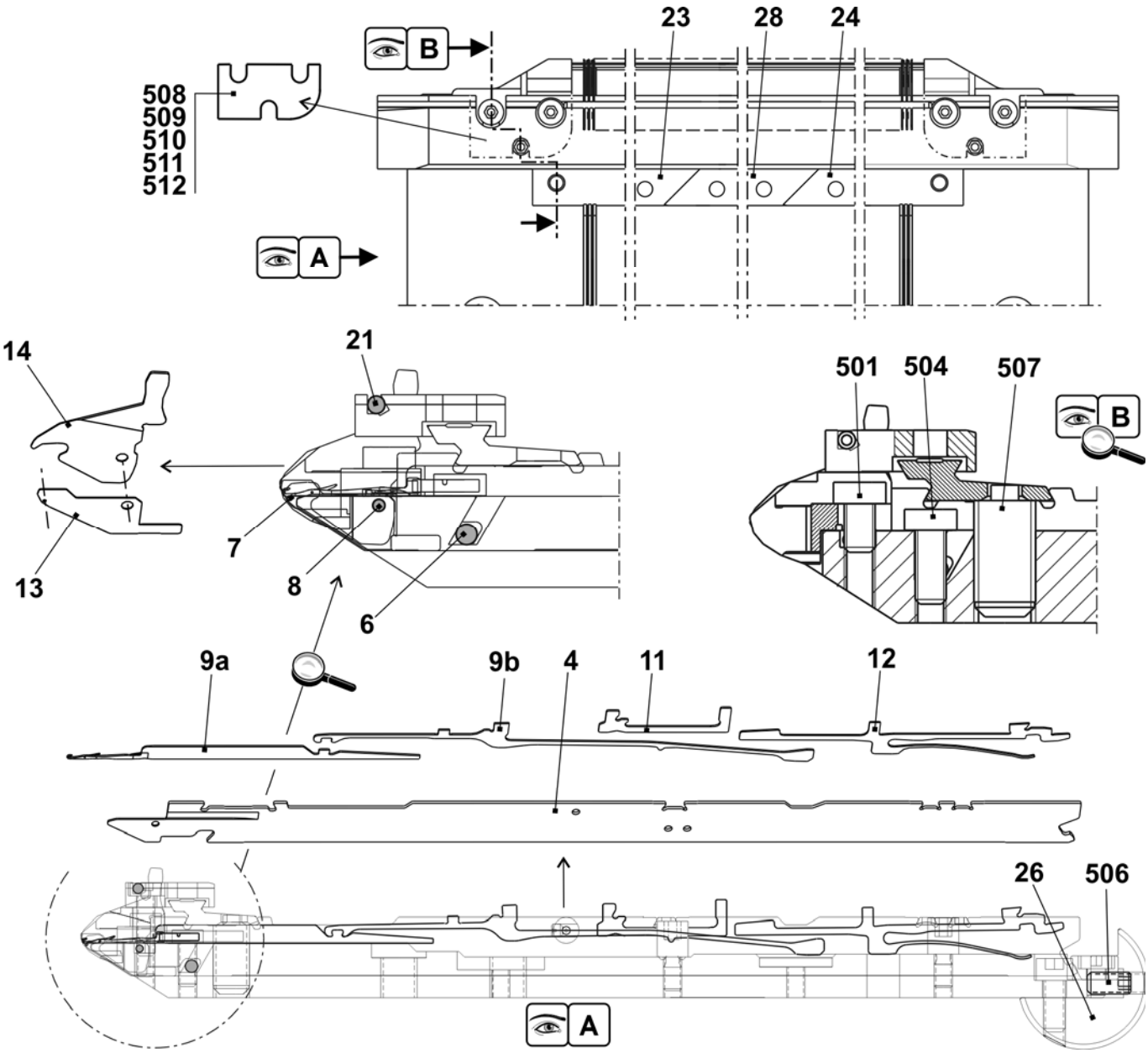

Continuation needle bed E18

Pos	Designation	Ident No		Pos	Designation	Ident No
Σ	**Needle bed complete at the front and rear E18**	**251 115**				
1	Needle bed at the front + rear E18	250 078		27	Stop screw	214 039
2	Holding-down jack bed at the front E18	238 918		500	Cap screw M6X14	022 658
3	Holding-down jack bed at the rear E18	238 921		502	Cap screw M5x8	023 379
5	Pressure slide	237 509		503	Cap screw M5x22	023 193
8	Spring steel wire Ø2.0	251 085		505	Set screw M3.5x3-1	020 512
15	Limiter on the left E16-E20	220 821		30*	Adjusting piece	206 375
16	Limiter on the right E16-E20	220 822		31*	Set screw complete	207 712
17	Cover rail at the rear	237 379		40*	Disk brush	235 612
18	Cover rail at the front E9.2	238 020		41*	Container disk brush	233 012
19	Cover rail	237 382		42*	Disk brush	235 612
20	Cover rail	237 383		520*	Cap screw M5x12	020 032
25	Bush	206 090		521*	Adjusting washer P6x12x0.3	023 540

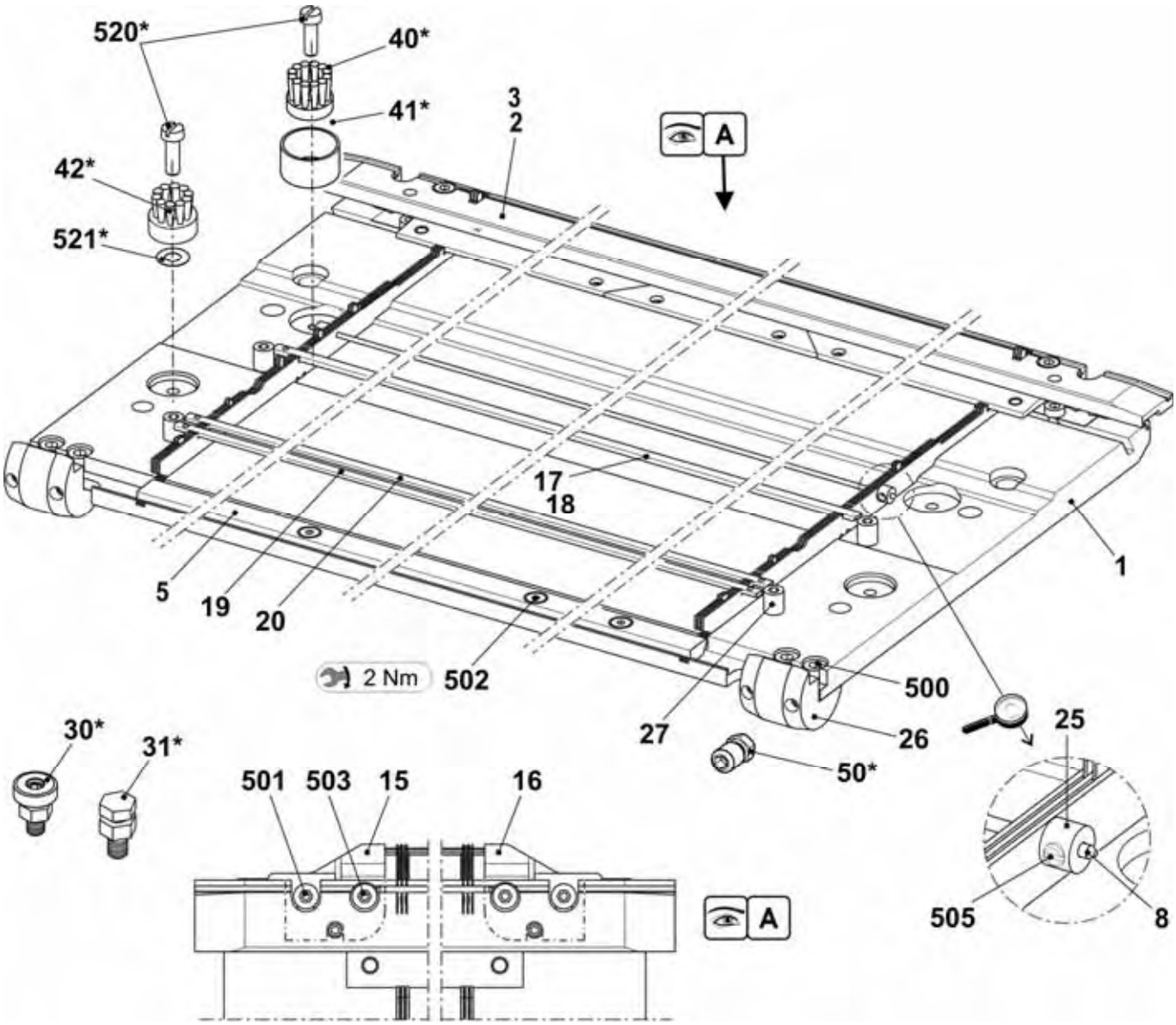

Needle bed E5m.4

Pos	Designation	Ident No	Pos	Designation	Ident No
Σ	**Needle bed complete at the front + rear E5m.7**	**238 242**	16	Needle rail on the left	205 311
2	Spring steel wire E4-5 Ø1.0	237 406	17	Needle rail on the right	205 312
3	Spring steel wire Ø2.0	223 854	18	Needle rail in the middle	237 387
4a	Needle E2,5.2-3.5.2	232 581	503	Cap screw M5x8-8.8	023 154
4b	Coupling part E4-E8	200 682	505	Cap screw M5x8	023 379
6	Intermediate slider with brake E5-E8	237 323	506	Set screw M6x12-45	022 400
7a	Selection jack E4-E8	200 687	507	Sprung thrust piece B-M10	023 177
7b	Selector spring E4-E8	200 690	509	Shim 0.02x18.5x34	023 194
10	Knock-over bit E5	204 996	510	Shim 0.03x18.5x34	023 195
11	Holding-down jack E5	205 031	511	Shim 0.05x18.5x34	023 196
12	Fixed wire Ø2.8	223 862	512	Shim 0.1x18.5x34	023 197
13	Support	206 352	513	Shim 0.2x18.5x34	023 253

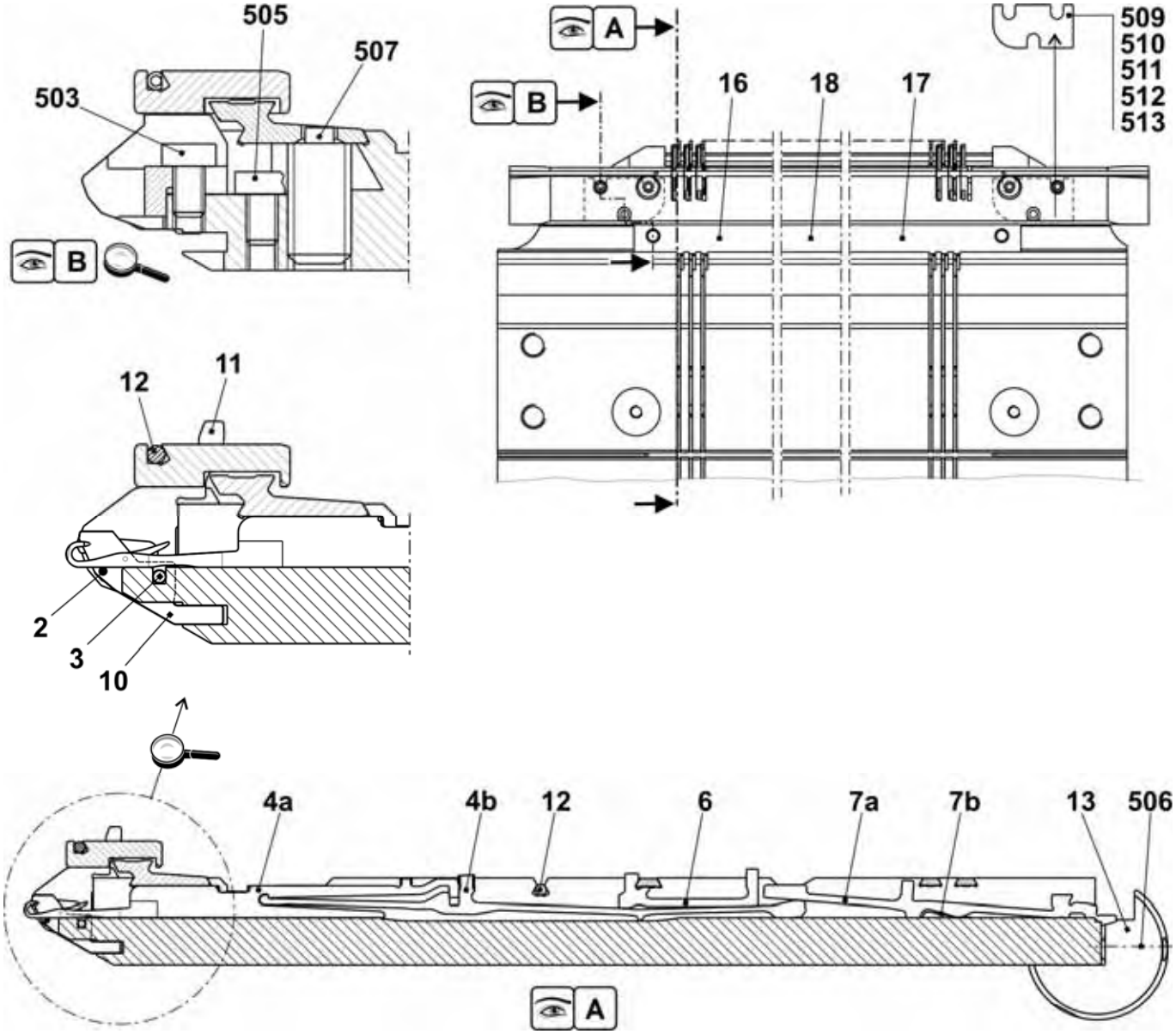

Continuation needle bed E5m.4

Pos	Designation	Ident No	Pos	Designation	Ident No
Σ	**Needle bed complete at the front + rear E5m.4**	**238 242**	501	Cap screw M5x10	022 918
1	Needle bed at the front + rear E5	238 005	502	Cap screw M6x25	020 137
2	Holding-down jack bed at the rear E5	238 027	504	Cap screw M5x22	023 193
3	Holding-down jack bed at the front E5	238 021	30*	Adjusting piece	206 375
4	Limiter on the left E4-E8	205 343	31*	Set screw complete	207 712
5	Limiter on the right E4-E8	205 344	40*	Disk brush	235 612
8	Cover rail at the rear	237 379	41*	Container, plate brush	233 012
9	Cover rail at the front E5	237 377	42*	Disk brush	235 612
10	Cover rail	237 382	520*	Cap screw M5x12	020 032
11	Cover rail	237 383	521*	Adjusting washer P6x12x0.3	023 540

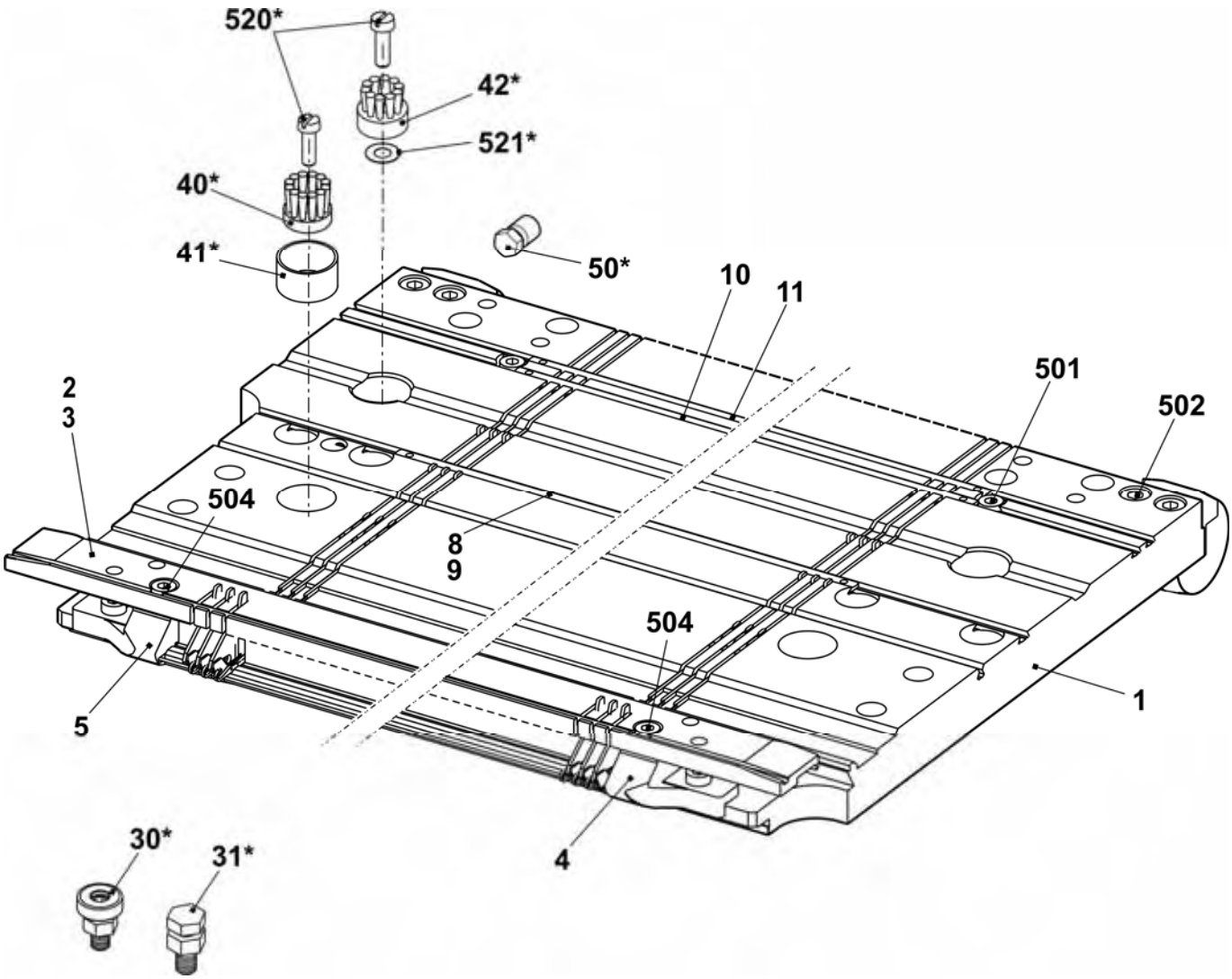

Needle bed E7m.5

Pos	*Designation*	*Ident No*	*Pos*	*Designation*	*Ident No*
Σ	**Needle bed complete at the front + rear E7m.5**	**238 243**	16	Needle rail on the left	205 311
2	Spring steel wire E7-8 Ø0.8	227 078	17	Needle rail on the right	205 312
3	Spring steel wire Ø2.0	223 854	18	Needle rail in the middle	237 387
4a	Needle E5-6 with round hook	205 396	503	Cap screw M5x8-8.8	023 154
4b	Coupling part E4-E8	200 682	505	Cap screw M5x8	023 379
6	Intermediate slider with brake E5-E8	237 323	506	Set screw M6x12-45	022 400
7a	Selection jack E4-E8	200 687	507	Sprung thrust piece B-M10	023 177
7b	Selector spring E4-E8	200 690	509	Shim 0.02x18.5x34	023 194
10	Knock-over bit E7	207 055	510	Shim 0.03x18.5x34	023 195
11	Holding-down jack E7	205 032	511	Shim 0.05x18.5x34	023 196
12	Fixed wire Ø2.8	223 862	512	Shim 0.1x18.5x34	023 197
13	Support	206 352	513	Shim 0.2x18.5x34	023 253

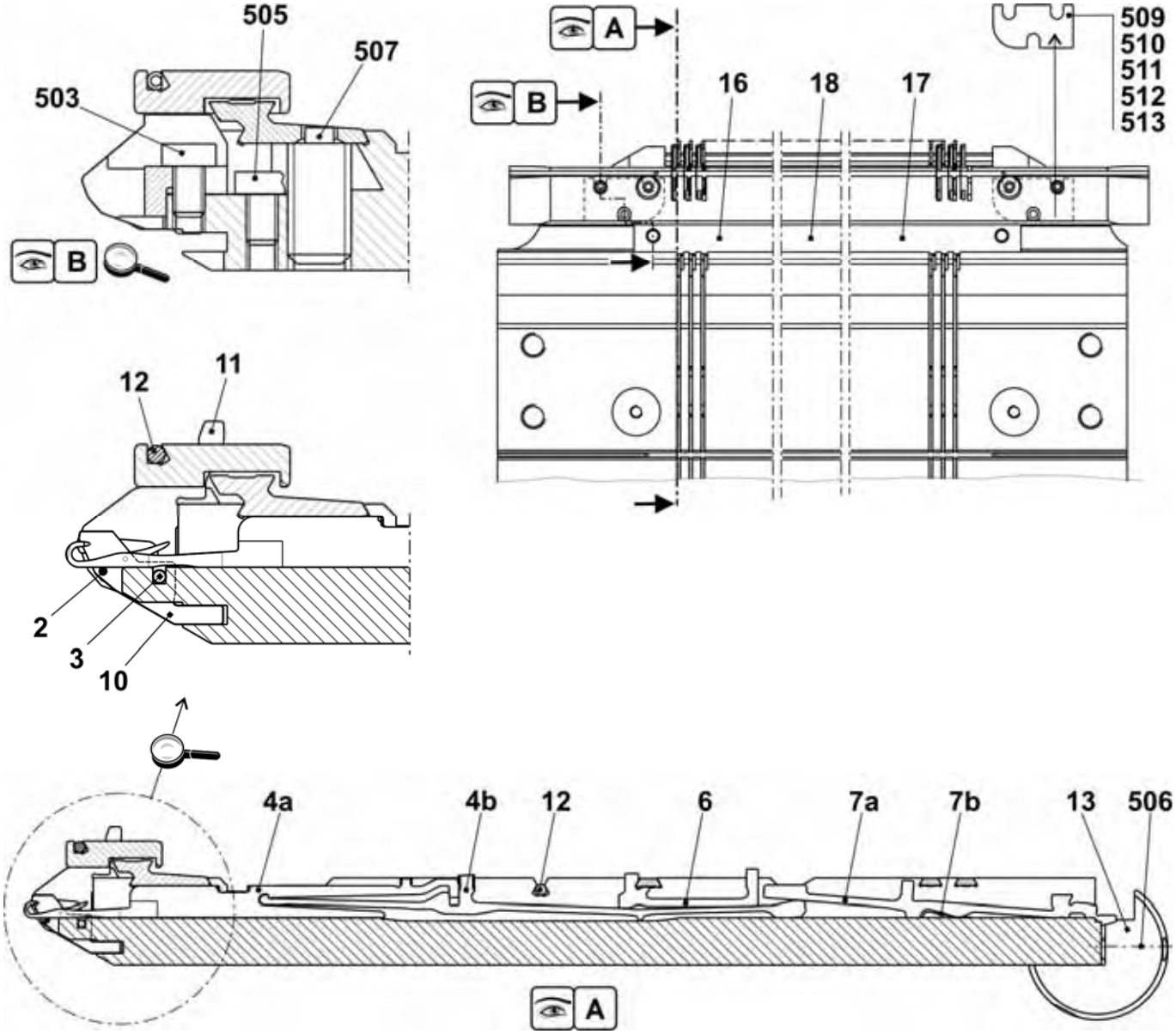

Continuation needle bed E7m.5

Pos	Designation	Ident No		Pos	Designation	Ident No
Σ	**Needle bed complete at the front + rear E7m.5**	**238 243**		501	Cap screw M5x10	022 918
1	Needle bed at the front + rear E7	238 006		502	Cap screw M6x25	020 137
2	Holding-down jack bed at the rear E7	238 028		504	Cap screw M5x22	023 193
3	Holding-down jack bed at the front E7	238 022		30*	Adjusting piece	206 375
4	Limiter on the left E4-E8	205 343		31*	Set screw complete	207 712
5	Limiter on the right E4-E8	205 344		40*	Disk brush	235 612
8	Cover rail at the rear	237 379		41*	Container, plate brush	233 012
9	Cover rail at the front E3,5.2	238 018		42*	Disk brush	235 612
10	Cover rail	237 382		520*	Cap screw M5x12	020 032
11	Cover rail	237 383		521*	Adjusting washer P6x12x0.3	023 540

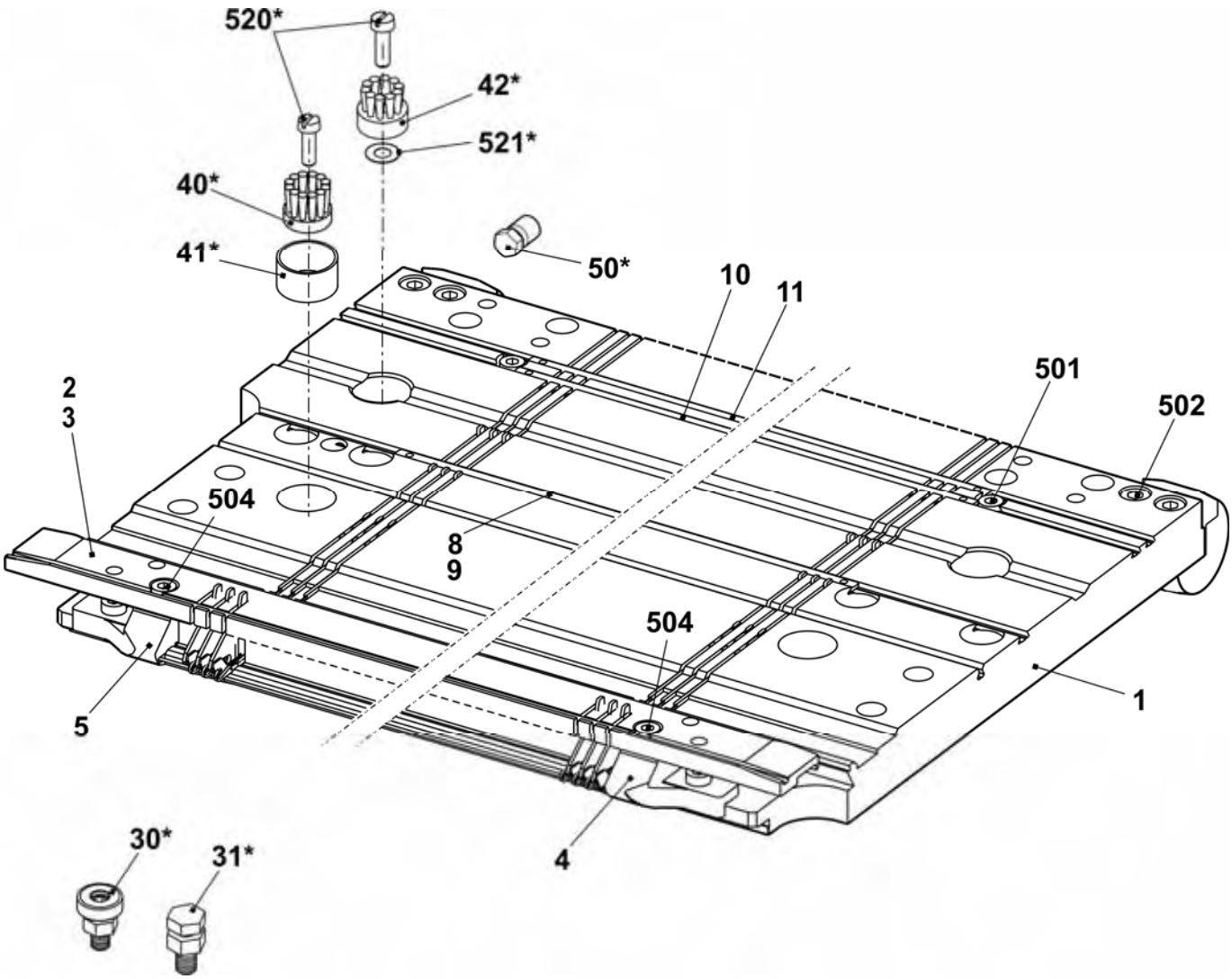

Needle bed E7m.8

Pos	Designation	Ident No	Pos	Designation	Ident No
Σ	**Needle bed complete at the front + rear E7**	**238 244**	16	Needle rail on the left	205 311
2	Spring steel wire E7-8 Ø0.8	227 078	17	Needle rail on the right	205 312
3	Spring steel wire Ø2.0	223 854	18	Needle rail in the middle	237 387
4a	Needle E8 with round hook	208 745	503	Cap screw M5x8-8.8	023 154
4b	Coupling part E4-E8	200 682	505	Cap screw M5x8	023 379
6	Intermediate slider with brake E5-E8	237 323	506	Set screw M6x12-45	022 400
7a	Selection jack E4-E8	200 687	507	Sprung thrust piece B-M10	023 177
7b	Selector spring E4-E8	200 690	509	Shim 0.02x18.5x34	023 194
10	Knock-over bit E7	207 055	510	Shim 0.03x18.5x34	023 195
11	Holding-down jack E7	205 032	511	Shim 0.05x18.5x34	023 196
12	Fixed wire Ø2.8	223 862	512	Shim 0.1x18.5x34	023 197
13	Support	206 352	513	Shim 0.2x18.5x34	023 253

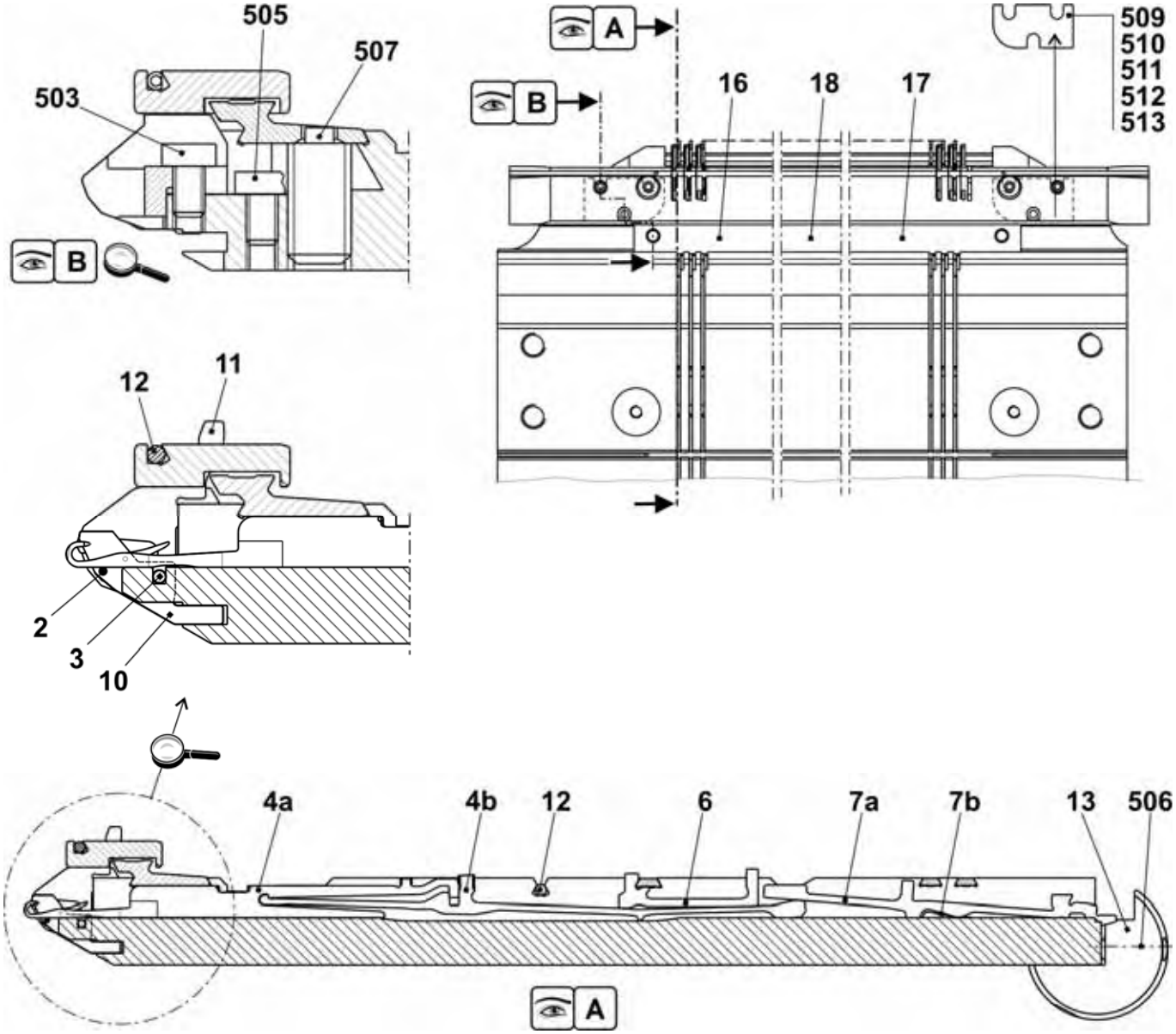

Continuation needle bed E7m.8

Pos	Designation	Ident No		Pos	Designation	Ident No
Σ	**Needle bed complete at the front + rear E7m.8**	**238 244**		501	Cap screw M5x10	022 918
1	Needle bed at the front + rear E7	238 006		502	Cap screw M6x25	020 137
2	Holding-down jack bed at the rear E7	238 028		504	Cap screw M5x22	023 193
3	Holding-down jack bed at the front E7	238 022		30*	Adjusting piece	206 375
4	Limiter on the left E4-E8	205 343		31*	Set screw complete	207 712
5	Limiter on the right E4-E8	205 344		40*	Disk brush	235 612
8	Cover rail at the rear	237 379		41*	Container, plate brush	233 012
9	Cover rail at the front E3,5.2	238 018		42*	Disk brush	235 612
10	Cover rail	237 382		520*	Cap screw M5x12	020 032
11	Cover rail	237 383		521*	Adjusting washer P6x12x0.3	023 540

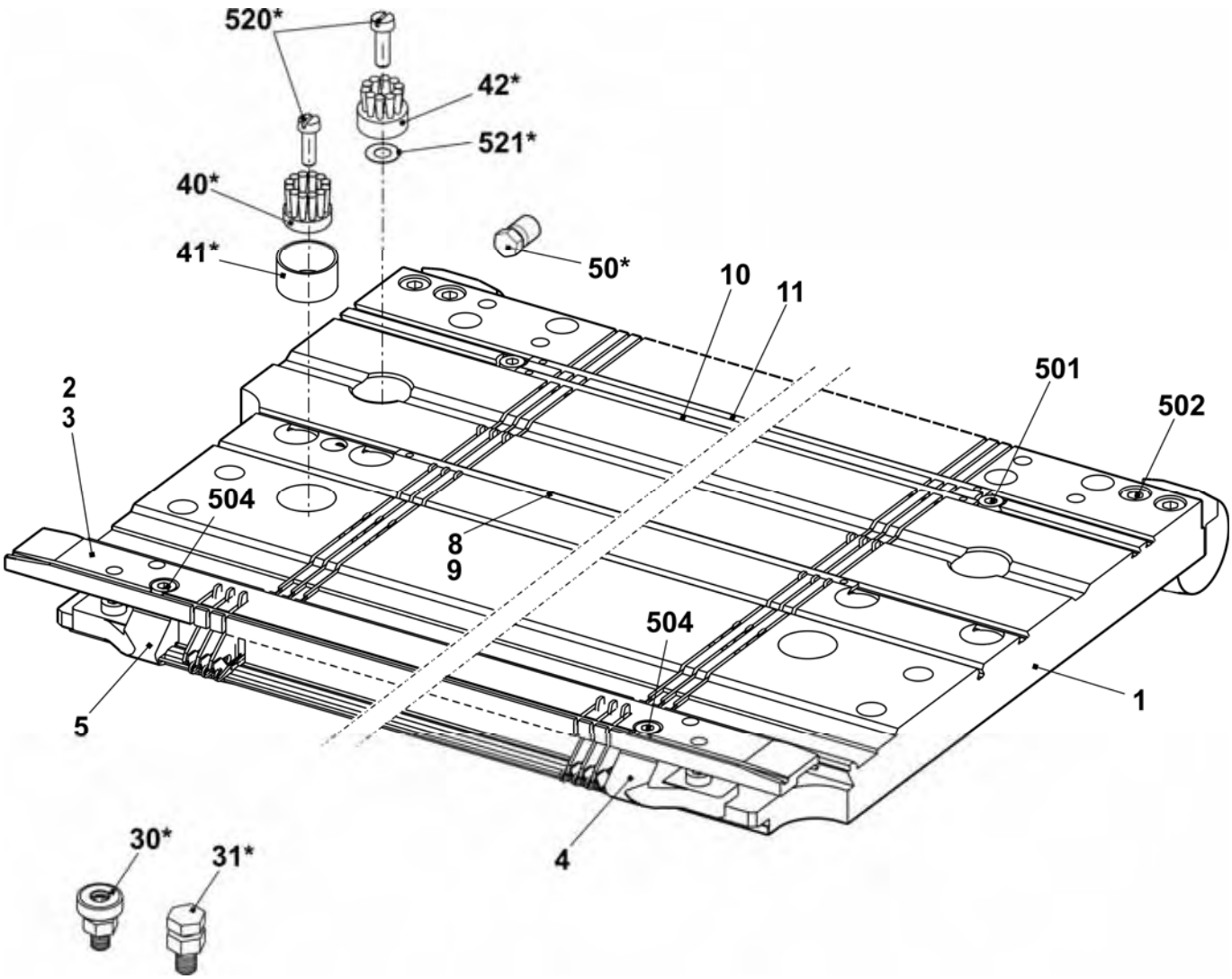

Needle bed E8m.7

Pos	Designation	Ident No		Pos	Designation	Ident No
Σ	**Needle bed complete at the front + rear E8m.7**	**238 245**		16	Needle rail on the left	205 311
2	Spring steel wire E7-8 Ø0.8	227 078		17	Needle rail on the right	205 312
3	Spring steel wire Ø2.0	223 854		18	Needle rail in the middle	237 387
4a	Needle E7 with round hook	205 397		503	Cap screw M5x8-8.8	023 154
4b	Coupling part E4-E8	200 682		505	Cap screw M5x8	023 379
6	Intermediate slider with brake E5-E8	237 323		506	Set screw M6x12-45	022 400
7a	Selection jack E4-E8	200 687		507	Sprung thrust piece B-M10	023 177
7b	Selector spring E4-E8	200 690		509	Shim 0.02x18.5x34	023 194
10	Knock-over bit E8	207 054		510	Shim 0.03x18.5x34	023 195
11	Holding-down jack E8	205 028		511	Shim 0.05x18.5x34	023 196
12	Fixed wire Ø2.8	223 862		512	Shim 0.1x18.5x34	023 197
13	Support	206 352		513	Shim 0.2x18.5x34	023 253

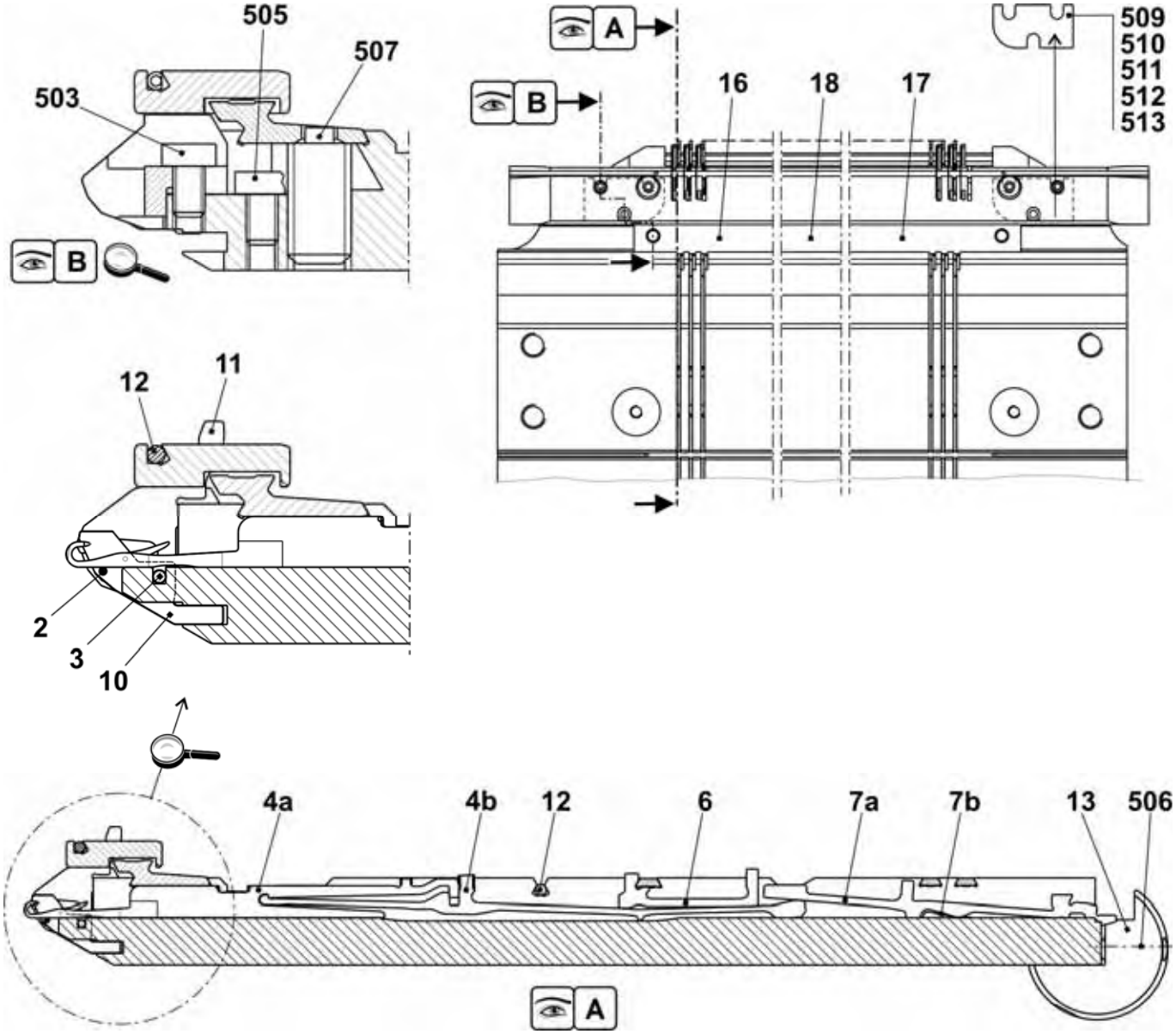

Continuation needle bed E8m.7

Pos	Designation	Ident No	Pos	Designation	Ident No
Σ	**Needle bed complete at the front + rear E8m.7**	**238 245**	501	Cap screw M5x10	022 918
1	Needle bed at the front + rear E8	238 007	502	Cap screw M6x25	020 137
2	Holding-down jack bed at the rear E8	238 029	504	Cap screw M5x22	023 193
3	Holding-down jack bed at the front E8	238 023	30*	Adjusting piece	206 375
4	Limiter on the left E4-E8	205 343	31*	Set screw complete	207 712
5	Limiter on the right E4-E8	205 344	40*	Disk brush	235 612
8	Cover rail at the rear	237 379	41*	Container, plate brush	233 012
9	Cover rail at the front E8	238 015	42*	Disk brush	235 612
10	Cover rail	237 382	520*	Cap screw M5x12	020 032
11	Cover rail	237 383	521*	Adjusting washer P6x12x0.3	023 540

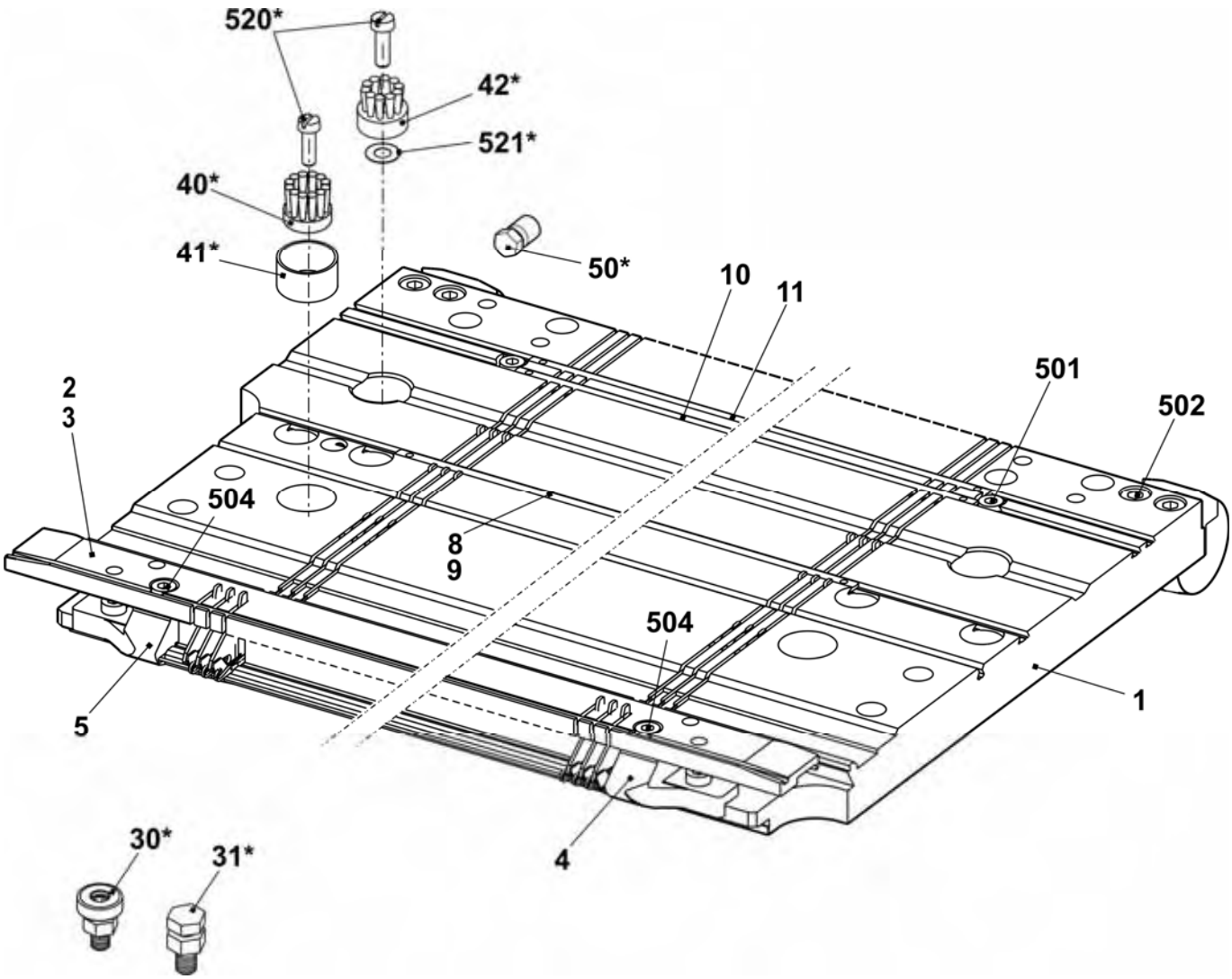

Needle bed E10m.12

Pos	*Designation*	*Ident No*		*Pos*	*Designation*	*Ident No*
Σ	**Needle bed complete at the front + rear E10m.12**	**241 681**		16	Needle rail on the left	205 311
2	Spring steel wire E10-14 Ø0.6	223 849		17	Needle rail on the right	205 312
3	Spring steel wire Ø2.0	223 854		18	Needle rail in the middle	237 387
4a	Needle E12	204 009		503	Cap screw M5x8-8.8	023 154
4b	Coupling part E10-12	200 683		505	Cap screw M5x8	023 379
6	Intermediate slider with brake E10	237 324		506	Set screw M6x12-45	022 400
7a	Selector spring E10-12	200 691		507	Sprung thrust piece B-M10	023 177
7b	Selection jack E10-12	200 688		509	Shim 0.02x18.5x34	023 194
10	Knock-over bit E10	239 756		510	Shim 0.03x18.5x34	023 195
11	Holding-down jack trick wall E10	239 815		511	Shim 0.05x18.5x34	023 196
12	Fixed wire Ø2.8	223 862		512	Shim 0.1x18.5x34	023 197
13	Support	206 352		513	Shim 0.2x18.5x34	023 253

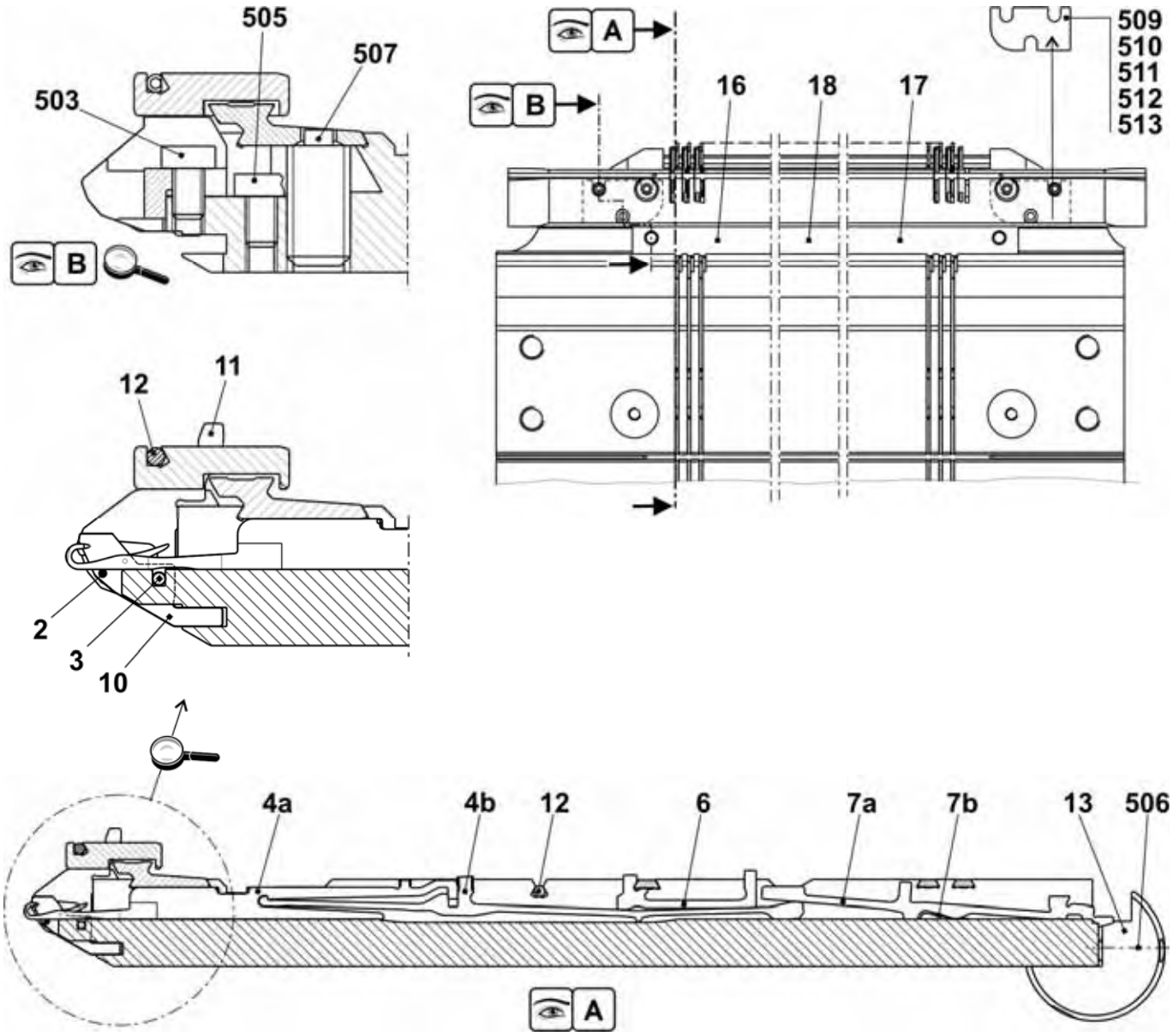

Continuation needle bed E10m.12

Pos	Designation	Ident No	Pos	Designation	Ident No
Σ	**Needle bed complete at the front + rear E10m.12**	**241 681**	501	Cap screw M5x10	022 918
1	Needle bed at the front + rear E10	241 671	502	Cap screw M6x25	020 137
2	Holding-down jack bed at the rear E10	238 030	504	Cap screw M5x22	023 193
3	Holding-down jack bed at the front E10	238 024	30*	Adjusting piece	206 375
4	Limiter on the left E10-14	205 764	31*	Set screw complete	207 712
5	Limiter on the right E10-14	205 765	40*	Disk brush	235 612
8	Cover rail at the rear	237 379	41*	Container, plate brush	233 012
9	Cover rail at the front E5.2	237 506	42*	Disk brush	235 612
10	Cover rail	237 382	520*	Cap screw M5x12	020 032
11	Cover rail	237 383	521*	Adjusting washer P6x12x0.3	023 540

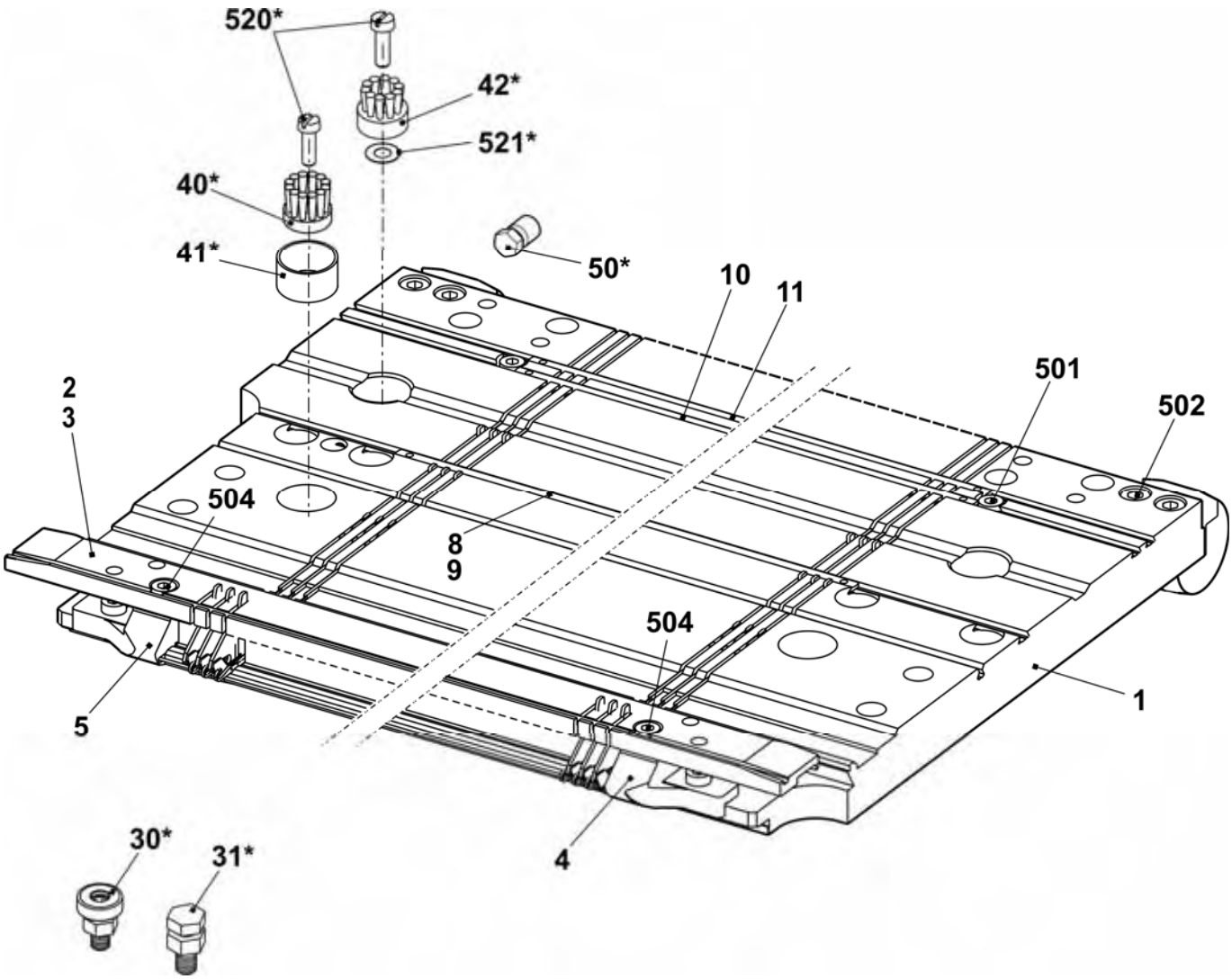

Needle bed E6.2 (12m.10)

Pos	*Designation*	*Ident No*		*Pos*	*Designation*	*Ident No*
Σ	**Needle bed complete at the front + rear E12m.10**	**238 247**		23	Needle rail on the left	205 311
4	Main trick wall E12	205 355		24	Needle rail on the right	205 312
6	Fixed wire Ø3.4	223 868		26	Support	206 352
7	Spring steel wire E10-14 Ø0.6	223 849		28	Needle rail in the middle	237 387
9a	Needle E10 with round hook	205 398		501	Cap screw M5x8-8.8 M	023 154
9b	Coupling part E10-12	200 683		504	Cap screw M5x12-8.8	022 943
11	Intermediate slider with brake E10	237 324		506	Set screw M6x12-45	022 400
12a	Selection jack E10-12	200 688		507	Sprung thrust piece B-M10	023 177
12b	Selector spring E10-12	200 691		508	Shim 0.02x18.5x34	023 194
13	Knock-over bit E12	205 013		509	Shim 0.03x18.5x34	023 195
14	Holding-down jack trick wall E12	227 821		510	Shim 0.05x18.5x34	023 196
21	Fixed wire Ø2.8	223 862		511	Shim 0.1x18.5x34	023 197
22	Spring steel wire Ø1.95	223 852		512	Shim 0.2x18.5x34	023 253

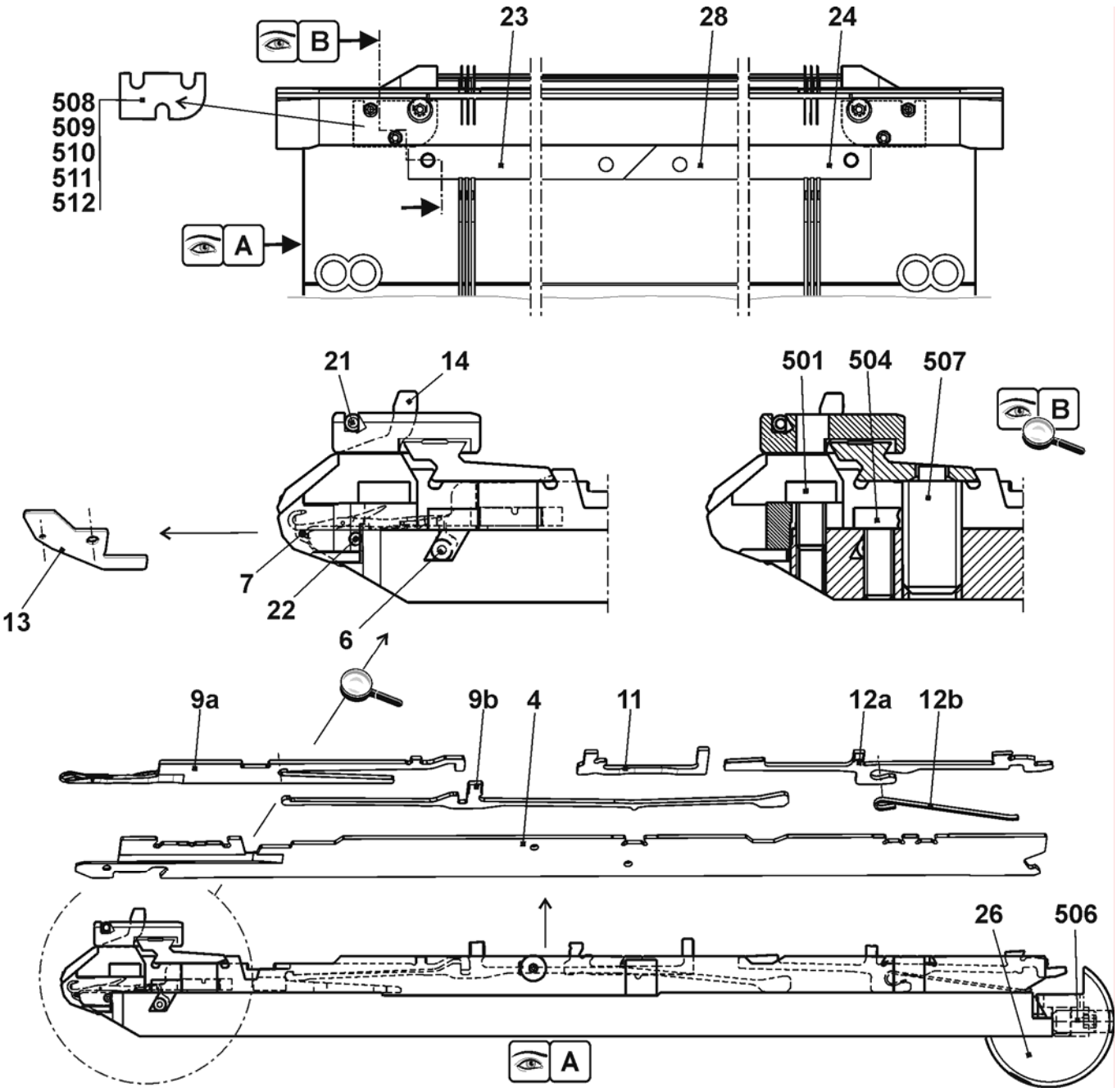

Continuation needle bed E6.2(12m.10)

Pos	Designation	Ident No		Pos	Designation	Ident No
Σ	**Needle bed complete at the front + rear E12m.10**	**238 247**		27	Stop screw	214 039
1	Needle bed at the front and rear E6.2	237 485		500	Cap screw M6X14	022 658
2	Holding-down jack bed at the front E12	238 025		502	Cap screw M5x8	023 379
3	Holding-down jack bed at the rear E12	238 031		503	Cap screw M5x22	023 193
5	Pressure slide	237 509		505	Set screw M3.5x3-1	020 512
8	Spring steel wire Ø2.0	223 854		30*	Adjusting piece	206 375
15	Limiter on the left E10-14	205 764		31*	Set screw complete	207 712
16	Limiter on the right E10-14	205 765		40*	Disk brush	235 612
17	Cover rail at the rear	237 379		41*	Container disk brush	233 012
18	Cover rail at the front E6.2	237 507		42*	Disk brush	235 612
19	Cover rail	237 382		520*	Cap screw M5x12	020 032
20	Cover rail	237 383		521*	Adjusting washer P6x12x0.3	023 540
25	Bush	206 090				

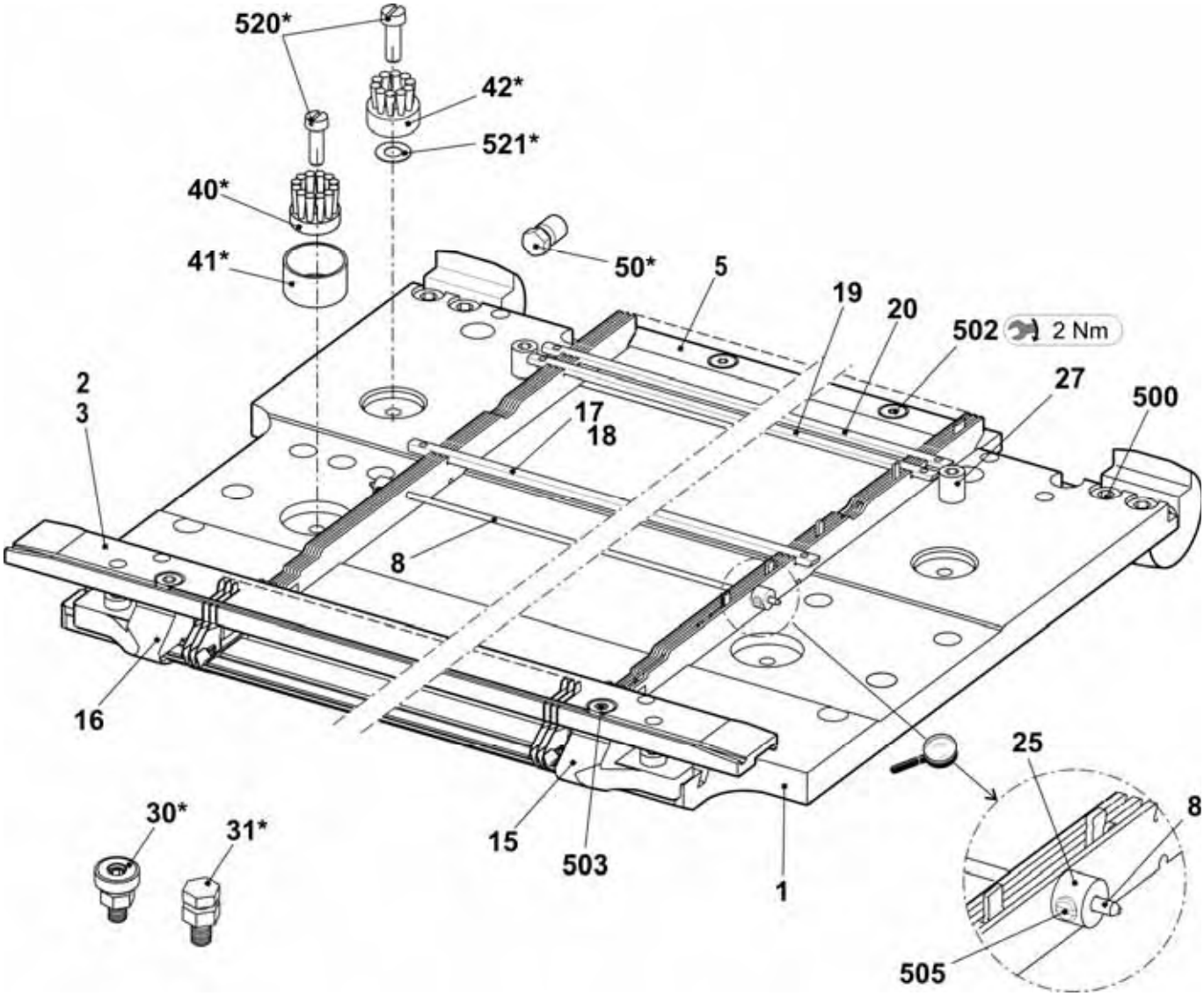

Needle bed E2,5.2 k&w

Pos	*Designation*	*Ident No*		*Pos*	*Designation*	*Ident No*
Σ	**Needle bed complete at the front + rear E2,5.2**	**238 220**		16	Needle rail on the left	205 311
2	Spring steel wire E4-5 Ø1.0	237 406		17	Needle rail on the right	205 312
3	Spring steel wire Ø2.0	223 854		18	Needle rail in the middle	237 387
4a	Needle E2,5.2-3.5.2	232 581		503	Cap screw M5x8-8.8	023 154
4b	Coupling part E4-E8	200 682		505	Cap screw M5x8	023 379
6	Intermediate slider with brake E5-E8	237 323		506	Set screw M6x12-45	022 400
7a	Selection jack E4-E8	200 687		507	Sprung thrust piece B-M10	023 177
7b	Selector spring E4-E8	200 690		509	Shim 0.02x18.5x34	023 194
10	Knock-over bit E5	204 996		510	Shim 0.03x18.5x34	023 195
11	Holding-down jack E5	205 031		511	Shim 0.05x18.5x34	023 196
12	Fixed wire Ø2.8	223 862		512	Shim 0.1x18.5x34	023 197
13	Support	206 352		513	Shim 0.2x18.5x34	023 253

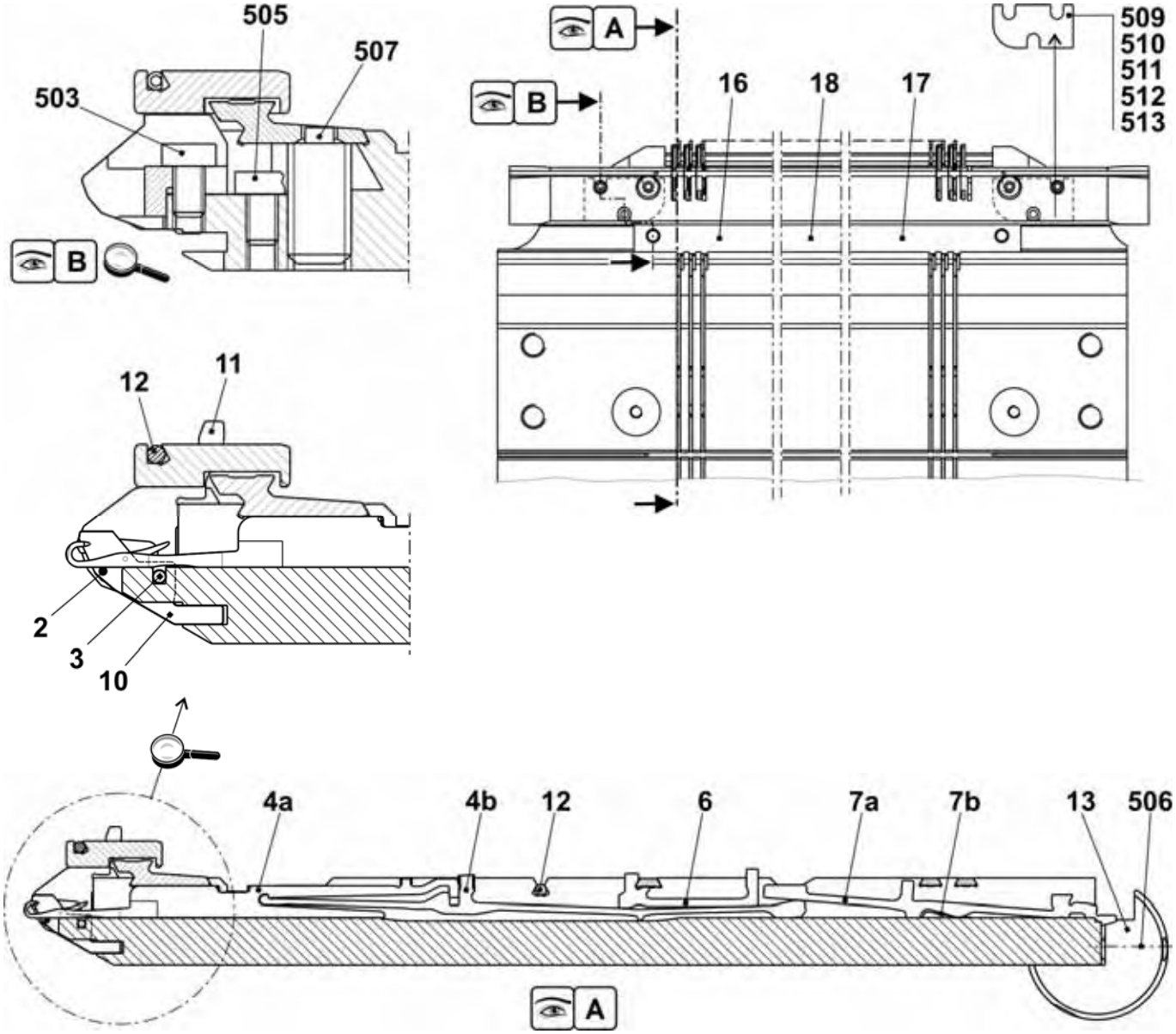

Continuation needle bed E2,5.2 k&w

Pos	Designation	Ident No		Pos	Designation	Ident No
Σ	**Needle bed complete at the front + rear E2,5.2**	**238 220**		501	Cap screw M5x10	022 918
1	Needle bed at the front + rear E5	238 005		502	Cap screw M6x25	020 137
2	Holding-down jack bed at the rear E2,5.2 KW	237 497		504	Cap screw M5x22	023 193
3	Holding-down jack bed at the front E2,5.2 KW	237 489		30*	Adjusting piece	206 375
4	Limiter on the left E4-E8	205 343		31*	Set screw complete	207 712
5	Limiter on the right E4-E8	205 344		40*	Disk brush	235 612
8	Cover rail at the rear	237 379		41*	Container, plate brush	233 012
9	Cover rail at the front	237 377		42*	Disk brush	235 612
10	Cover rail	237 382		520*	Cap screw M5x12	020 032
11	Cover rail	237 383		521*	Adjusting washer P6x12x0.3	023 540

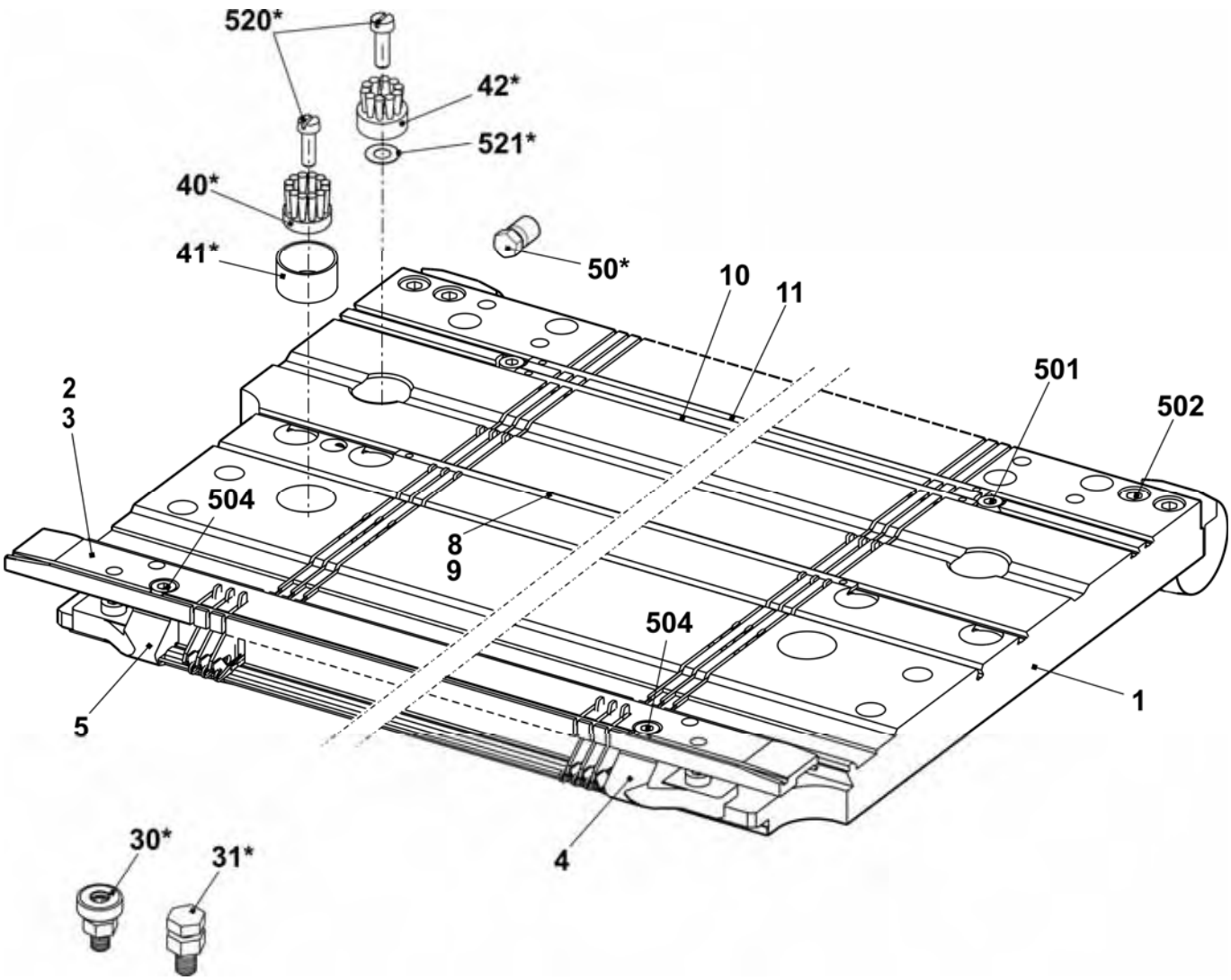

Needle bed E3,5.2 k&w

Pos	*Designation*	*Ident No*		*Pos*	*Designation*	*Ident No*
Σ	**Needle bed complete at the front + rear E3,5.2**	**238 221**		16	Needle rail on the left	205 311
2	Spring steel wire E4-5 Ø1.0	237 406		17	Needle rail on the right	205 312
3	Spring steel wire Ø2.0	223 854		18	Needle rail in the middle	237 387
4a	Needle E2,5.2-3.5.2	232 581		503	Cap screw M5x8-8.8	023 154
4b	Coupling part E4-E8	200 682		505	Cap screw M5x8	023 379
6	Intermediate slider with brake E5-E8	237 323		506	Set screw M6x12-45	022 400
7a	Selection jack E4-E8	200 687		507	Sprung thrust piece B-M10	023 177
7b	Selector spring E4-E8	200 690		509	Shim 0.02x18.5x34	023 194
10	Knock-over bit E3,5.2	229 034		510	Shim 0.03x18.5x34	023 195
11	Holding-down jack breast	229 032		511	Shim 0.05x18.5x34	023 196
12	Fixed wire Ø2.8	223 862		512	Shim 0.1x18.5x34	023 197
13	Support	206 352		513	Shim 0.2x18.5x34	023 253

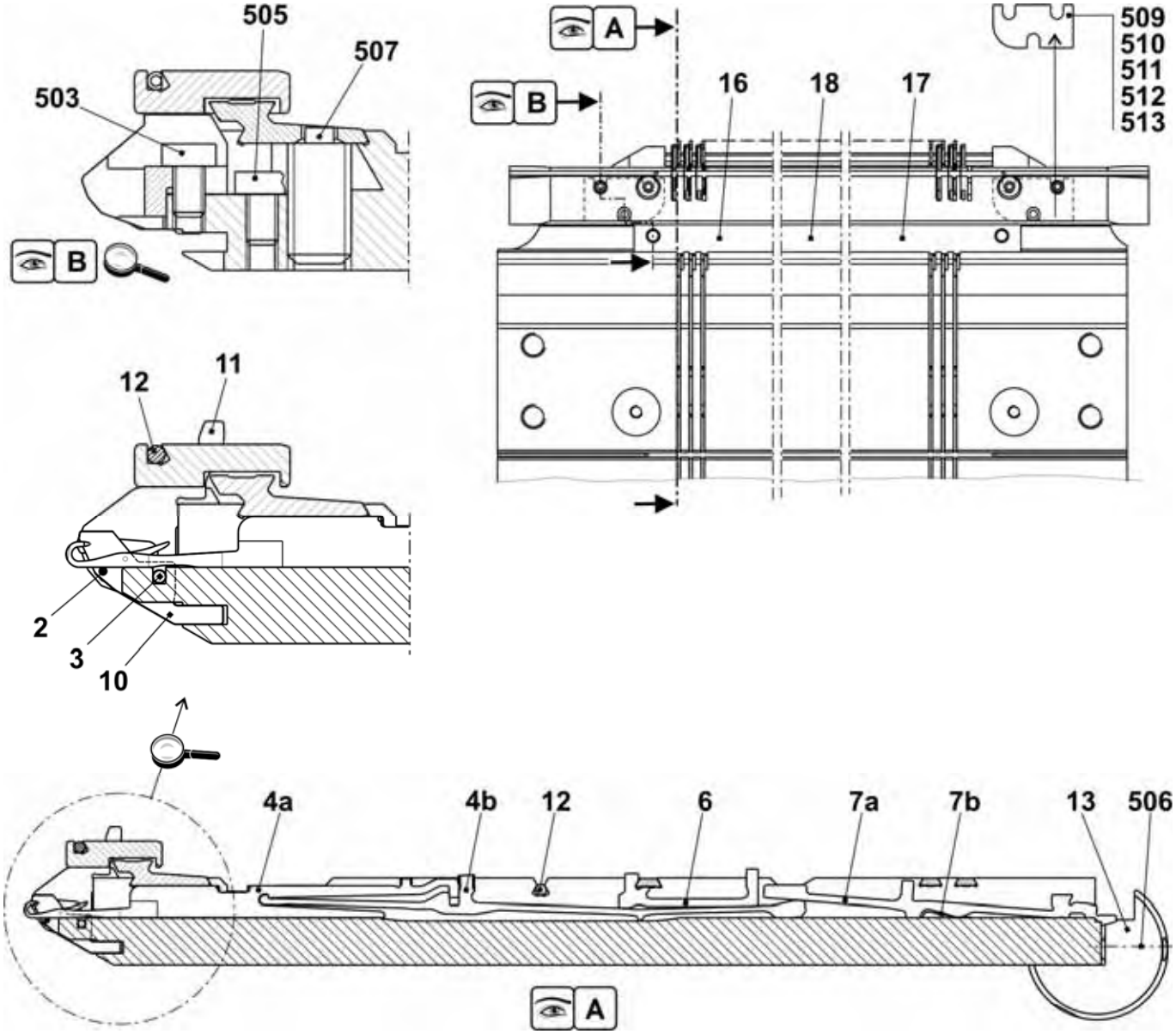

Continuation needle bed E3,5.2 k&w

Pos	Designation	Ident No	Pos	Designation	Ident No
Σ	**Needle bed complete at the front + rear E3,5.2**	**238 221**	501	Cap screw M5x10	022 918
1	Needle bed at the front + rear E7	238 006	502	Cap screw M6x25	020 137
2	Holding-down jack bed at the rear E3,5.2	237 498	504	Cap screw M5x22	023 193
3	Holding-down jack bed at the front E3,5.2	237 490	30*	Adjusting piece	206 375
4	Limiter on the left E4-E8	205 343	31*	Set screw complete	207 712
5	Limiter on the right E4-E8	205 344	40*	Disk brush	235 612
8	Cover rail at the rear	237 379	41*	Container, plate brush	233 012
9	Cover rail at the front E3,5.2	238 018	42*	Disk brush	235 612
10	Cover rail	237 382	520*	Cap screw M5x12	020 032
11	Cover rail	237 383	521*	Adjusting washer P6x12x0.3	023 540

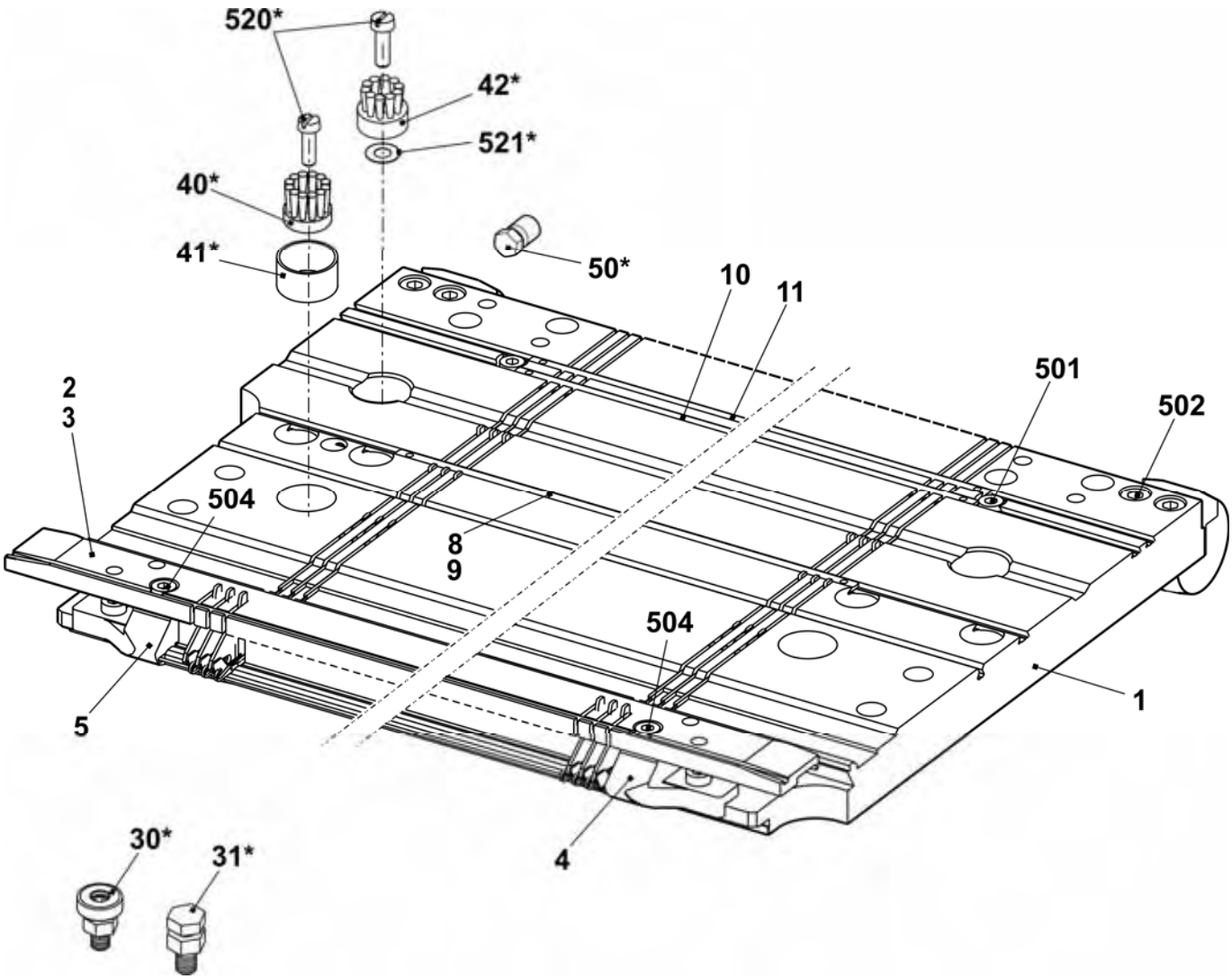

Needle bed E5.2 k&w

Pos	*Designation*	*Ident No*		*Pos*	*Designation*	*Ident No*
Σ	**Needle bed complete at the front + rear E5.2**	**237 513**		23	Needle rail on the left	205 311
4	Main trick wall E5.2	219 171		24	Needle rail on the right	205 312
6	Fixed wire Ø3.4	223 868		26	Support	206 352
7	Spring steel wire E4-5 Ø1.0	237 406		28	Needle rail in the middle	237 387
9a	Needle E5.2 vosa special 110.118-86	219 181		501	Cap screw M5x8-8.8 M	023 154
9b	Coupling part E5.2	219 188		504	Cap screw M5x12-8.8	022 943
11	Intermediate slider with brake E5.2	236 030		506	Set screw M6x12-45	022 400
12a	Selection jack E5.2	219 214		507	Sprung thrust piece B-M10	023 177
12b	Selector spring E5.2	219 265		508	Shim 0.02x18.5x34	023 194
13	Knock-over bit E5.2	221 367		509	Shim 0.03x18.5x34	023 195
14	Holding-down jack breast E5.2	229 832		510	Shim 0.05x18.5x34	023 196
21	Fixed wire Ø2.8	223 862		511	Shim 0.1x18.5x34	023 197
22	Spring steel wire Ø1.95	223 852		512	Shim 0.2x18.5x34	023 253

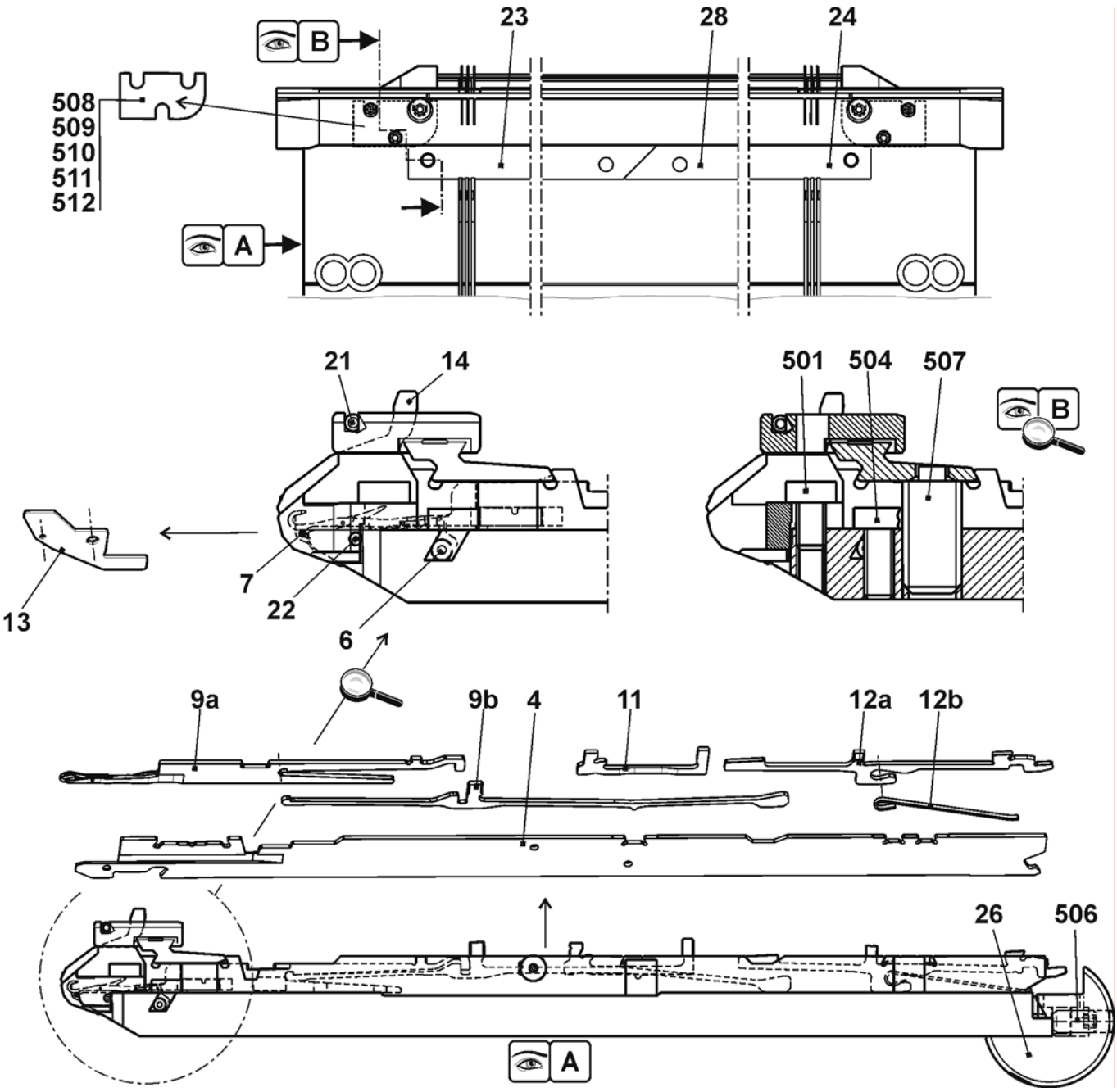

Continuation needle bed E5.2 k&w

Pos	*Designation*	*Ident No*	*Pos*	*Designation*	*Ident No*
Σ	**Needle bed complete at the front + rear E5.2**	**237 513**	27	Stop screw	214 039
1	Needle bed at the front + rear E5.2	237 484	500	Cap screw M6X14	022 658
2	Holding-down jack bed at the front E5.2	237 491	502	Cap screw M5x8	023 379
3	Holding-down jack bed at the rear E5.2	237 499	503	Cap screw M5x22	023 193
5	Pressure slide	237 509	505	Set screw M3.5x3-1	020 512
8	Spring steel wire Ø2.0	223 854	30*	Adjusting piece	206 375
15	Limiter on the left E4-E8	205 343	31*	Set screw complete	207 712
16	Limiter on the right E4-E8	205 344	40*	Disk brush	235 612
17	Cover rail at the rear	237 379	41*	Container disk brush	233 012
18	Cover rail at the front E5.2	237 506	42*	Disk brush	235 612
19	Cover rail	237 382	520*	Cap screw M5x12	020 032
20	Cover rail	237 383	521*	Adjusting washer P6x12x0.3	023 540
25	Bush	206 090			

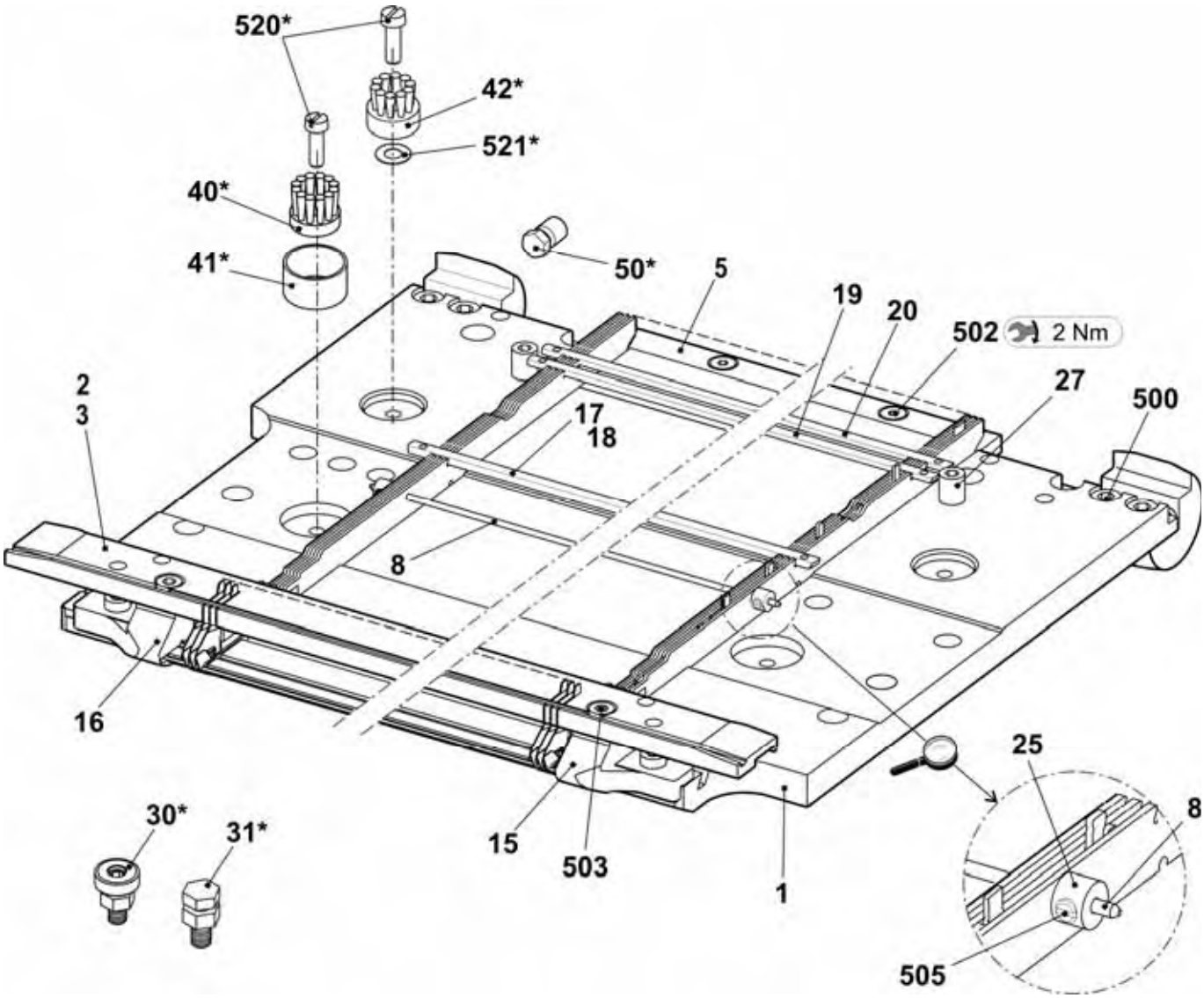

Needle bed E6.2 k&w

Pos	*Designation*	*Ident No*		*Pos*	*Designation*	*Ident No*
Σ	**Needle bed complete at the front + rear E6.2**	**237 514**		23	Needle rail on the left	205 311
4	Main trick wall E12	205 355		24	Needle rail on the right	205 312
6	Fixed wire Ø3.4	223 868		26	Support	206 352
7	Spring steel wire E10-14 Ø0.6	223 849		28	Needle rail in the middle	237 387
9a	Needle E6.2	207 349		501	Cap screw M5x8-8.8 M	023 154
9b	Coupling part E10-12	200 683		504	Cap screw M5x12-8.8	022 943
11	Intermediate slider with brake E10	237 324		506	Set screw M6x12-45	022 400
12a	Selection jack E10-12	200 688		507	Sprung thrust piece B-M10	023 177
12b	Selector spring E10-12	200 691		508	Shim 0.02x18.5x34	023 194
13	Knock-over bit E6.2	237 863		509	Shim 0.03x18.5x34	023 195
14	Holding-down jack E6.2	237 852		510	Shim 0.05x18.5x34	023 196
21	Fixed wire Ø2.8	223 862		511	Shim 0.1x18.5x34	023 197
22	Spring steel wire Ø1.95	223 852		512	Shim 0.2x18.5x34	023 253

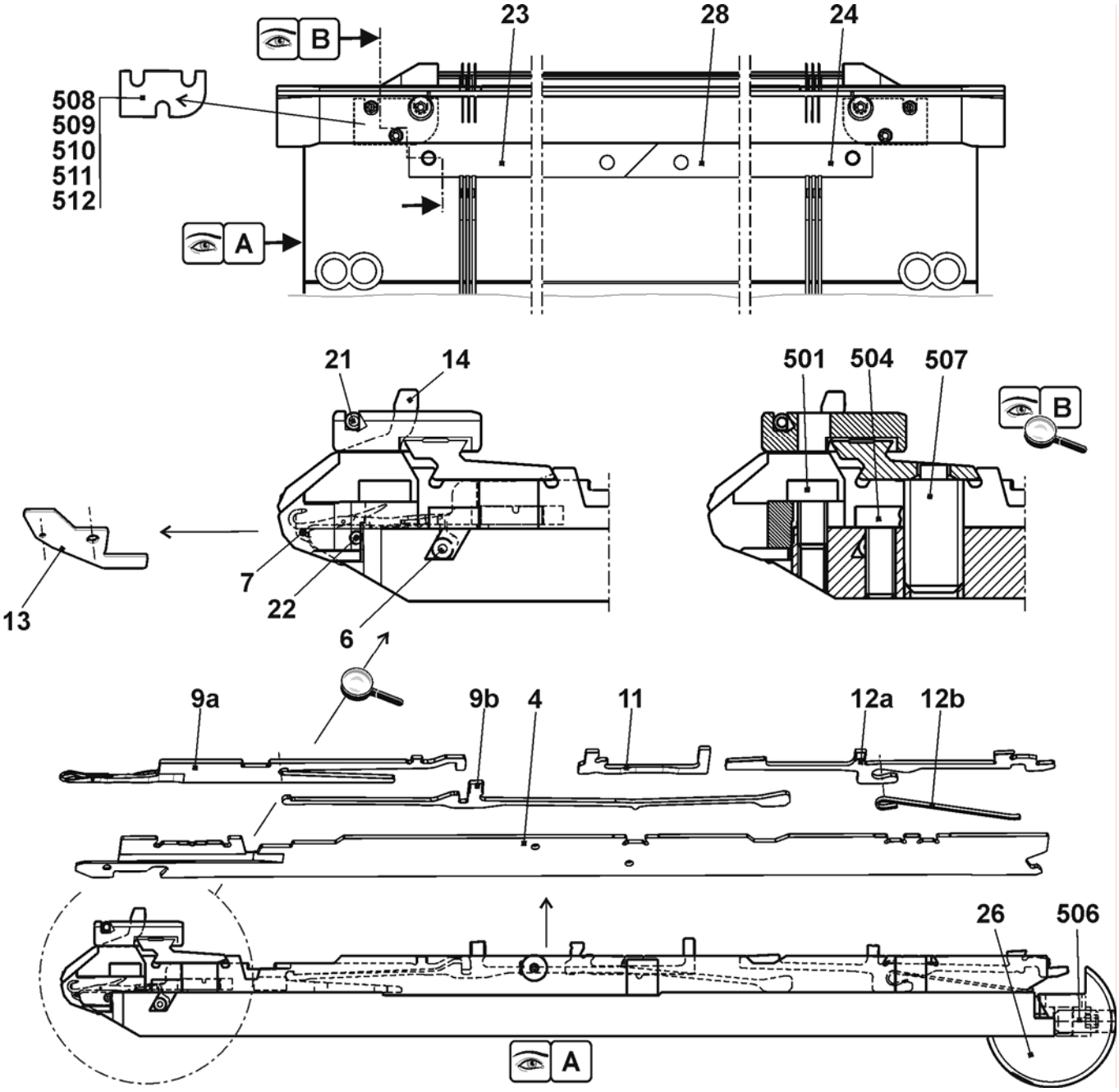

Continuation needle bed E6.2 k&w

Pos	Designation	Ident No		Pos	Designation	Ident No
Σ	**Needle bed complete at the front + rear E6.2**	**237 514**		27	Stop screw	214 039
1	Needle bed at the front and rear E6.2	237 485		500	Cap screw M6X14	022 658
2	Holding-down jack bed at the front E6.2	237 492		502	Cap screw M5x8	023 379
3	Holding-down jack bed at the rear E6.2	237 500		503	Cap screw M5x22	023 193
5	Pressure slide	237 509		505	Set screw M3.5x3-1	020 512
8	Spring steel wire Ø2.0	223 854		30*	Adjusting piece	206 375
15	Limiter on the left E10-14	205 764		31*	Set screw complete	207 712
16	Limiter on the right E10-14	205 765		40*	Disk brush	235 612
17	Cover rail at the rear	237 379		41*	Container disk brush	233 012
18	Cover rail at the front E6.2	237 507		42*	Disk brush	235 612
19	Cover rail	237 382		520*	Cap screw M5x12	020 032
20	Cover rail	237 383		521*	Adjusting washer P6x12x0.3	023 540
25	Bush	206 090				

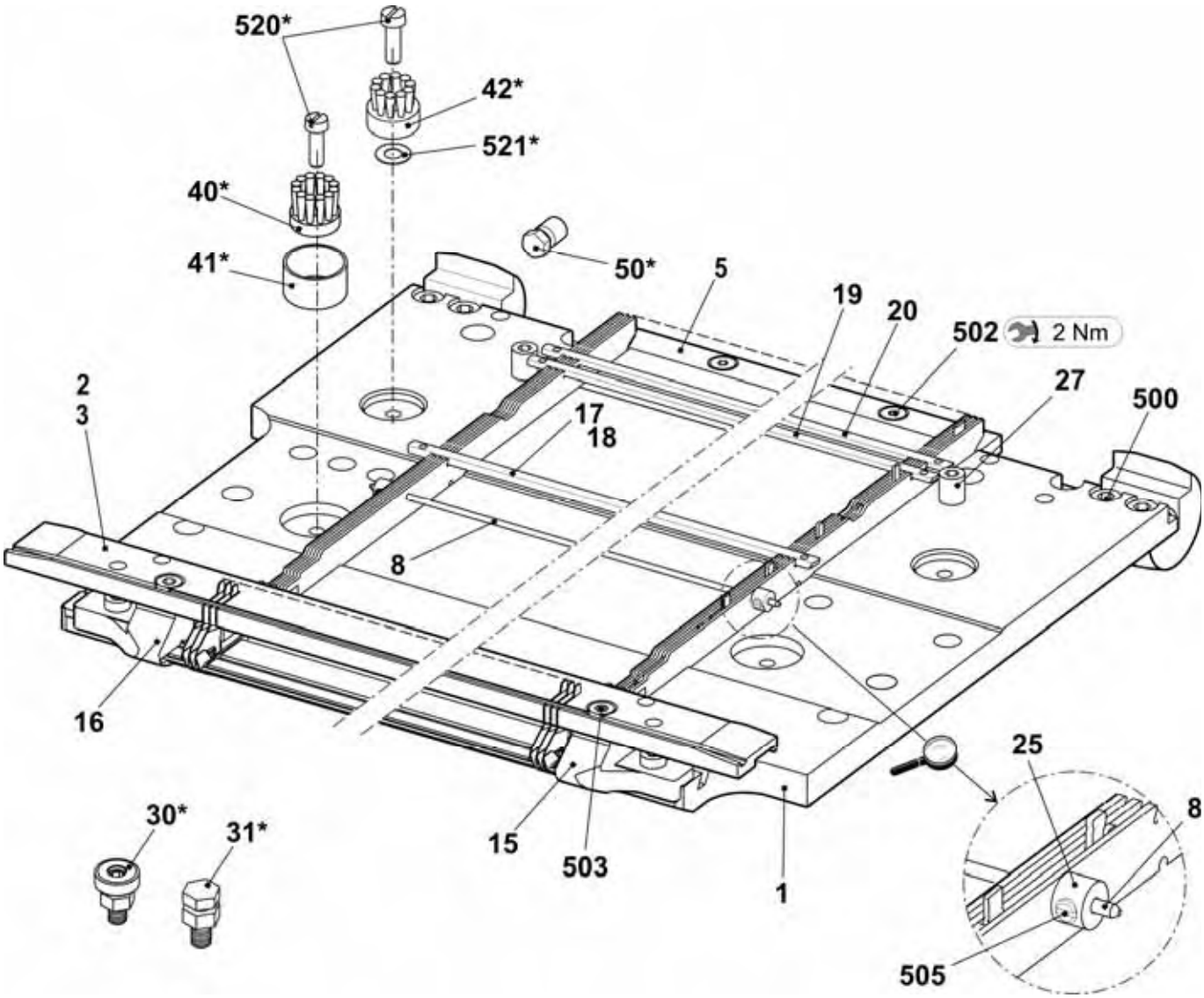

Needle bed E7.2 k&w

Pos	*Designation*	*Ident No*		*Pos*	*Designation*	*Ident No*
Σ	**Needle bed complete at the front + rear E7.2**	**237 515**		23	Needle rail on the left	205 311
4	Main trick wall E14	209 574		24	Needle rail on the right	205 312
6	Fixed wire Ø3.4	223 868		26	Support	206 352
7	Spring steel wire E10-14 Ø0.6	223 849		28	Needle rail in the middle	237 387
9a	Needle E7.2 vosa special 112.70-62	225 230		501	Cap screw M5x8-8.8 M	023 154
9b	Coupling part E14	209 633		504	Cap screw M5x12-8.8	022 943
11	Intermediate slider with brake E14	237 373		506	Set screw M6x12-45	022 400
12	Selection jack with spring E14	224 725		507	Sprung thrust piece B-M10	023 177
---	----	---		508	Shim 0.02x18.5x34	023 194
13	Knock-over bit E7.2	234 903		509	Shim 0.03x18.5x34	023 195
14	Holding-down jack E7.2	236 954		510	Shim 0.05x18.5x34	023 196
21	Fixed wire Ø2.8	223 862		511	Shim 0.1x18.5x34	023 197
22	Spring steel wire Ø1.95	223 852		512	Shim 0.2x18.5x34	023 253

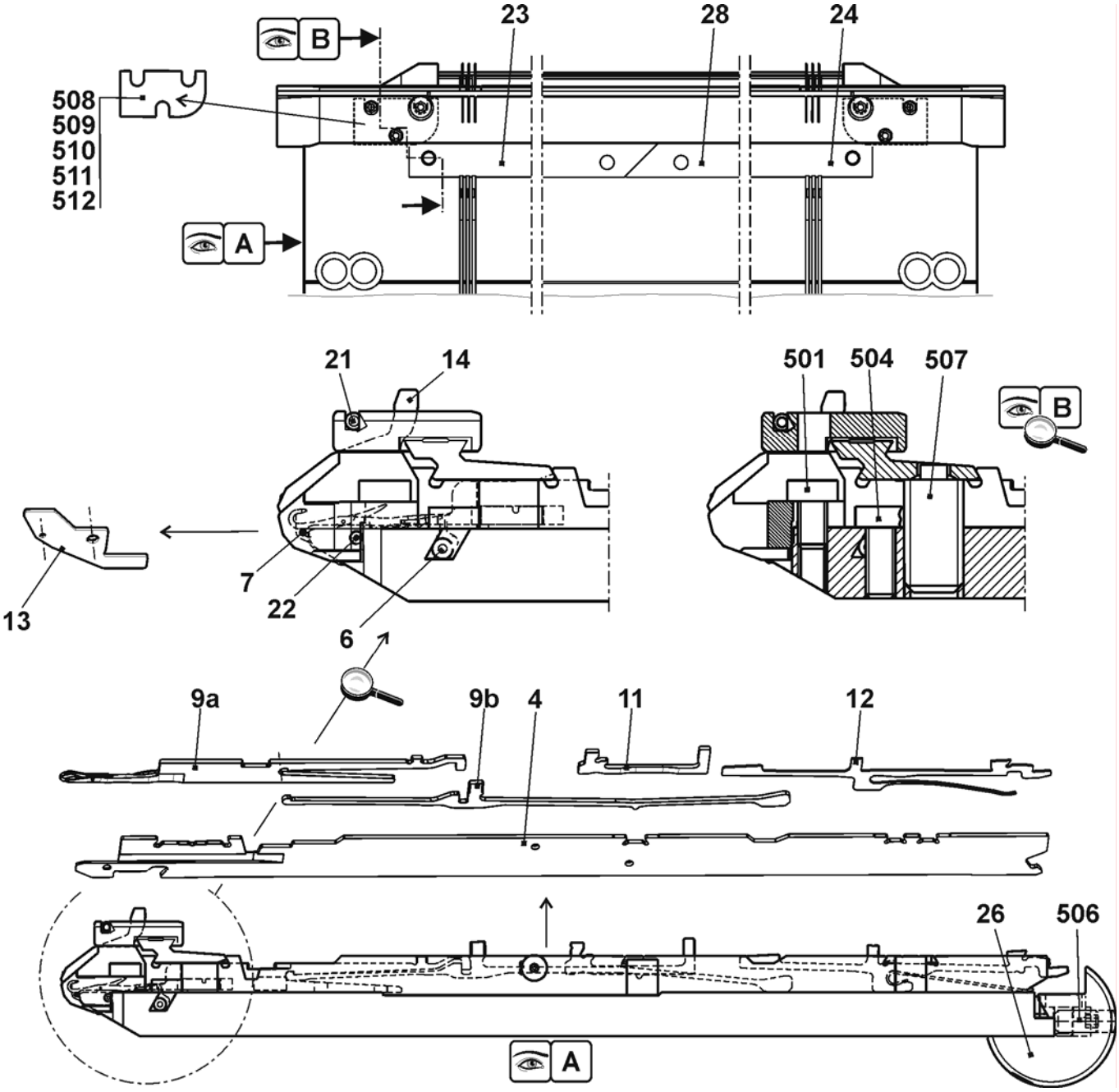

Continuation needle bed E7.2 k&w

Pos	Designation	Ident No		Pos	Designation	Ident No
Σ	**Needle bed complete at the front + rear E7.2**	**237 515**		27	Stop screw	214 039
1	Needle bed at the front + rear E7.2	237 486		500	Cap screw M6X14	022 658
2	Holding-down jack bed at the front E7.2	237 493		502	Cap screw M5x8	023 379
3	Holding-down jack bed at the rear E7.2	237 501		503	Cap screw M5x22	023 193
5	Pressure slide	237 509		505	Set screw M3.5x3-1	020 512
8	Spring steel wire Ø2.0	223 854		30*	Adjusting piece	206 375
15	Limiter on the left E10-14	205 764		31*	Set screw complete	207 712
16	Limiter on the right E10-14	205 765		40*	Disk brush	235 612
17	Cover rail at the rear	237 379		41*	Container disk brush	233 012
18	Cover rail at the front E7.2	237 508		42*	Disk brush	235 612
19	Cover rail	237 382		520*	Cap screw M5x12	020 032
20	Cover rail	237 383		521*	Adjusting washer P6x12x0.3	023 540
25	Bush	206 090				

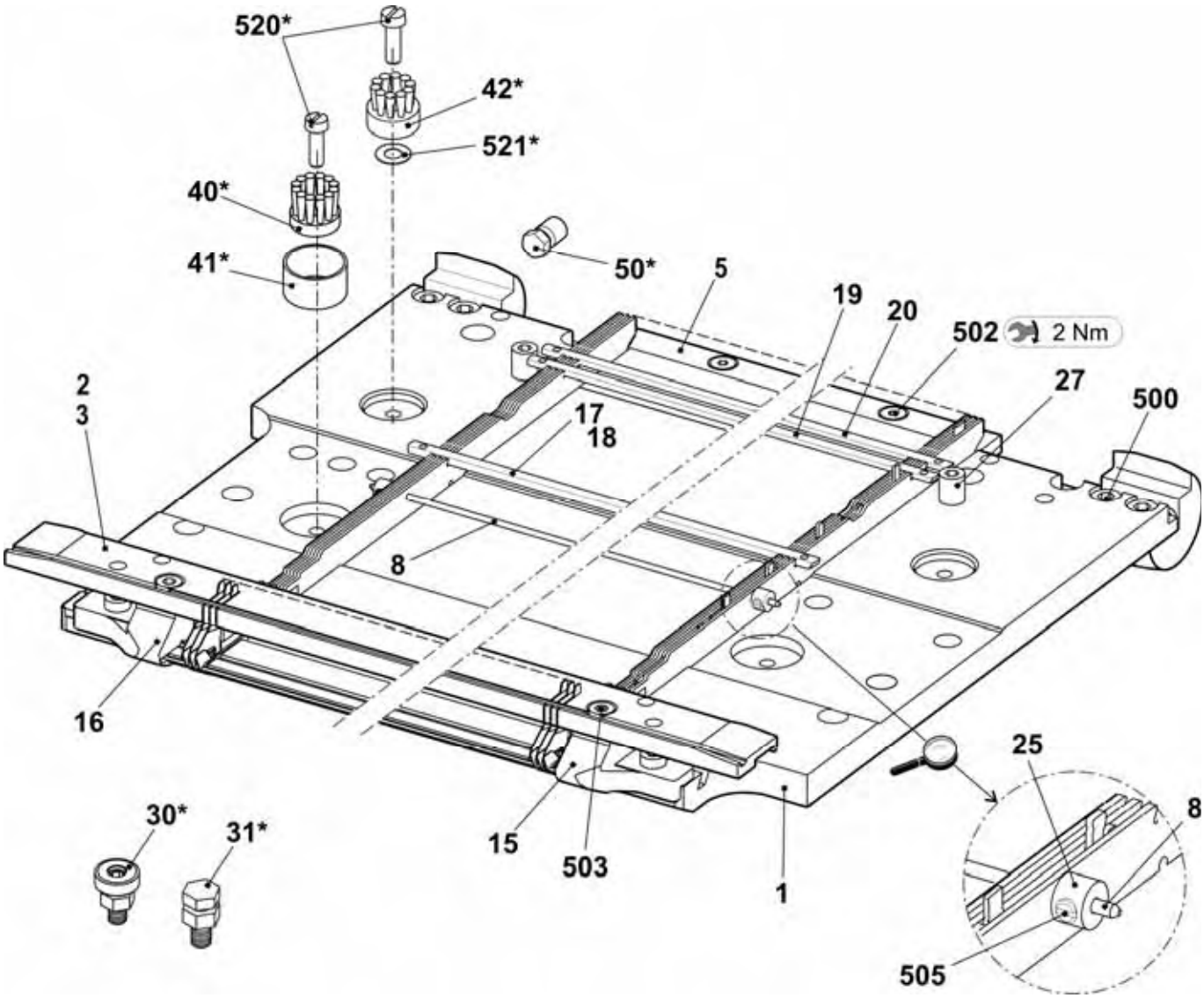

Needle bed E2,5.2 mg

Pos	*Designation*	*Ident No*		*Pos*	*Designation*	*Ident No*
Σ	**Needle bed complete at the front + rear E2,5.2**	**239 227**		16	Needle rail on the left	205 311
2	Spring steel wire E4-5 Ø1.0	237 406		17	Needle rail on the right	205 312
3	Spring steel wire Ø2.0	223 854		18	Needle rail in the middle	237 387
4a	Needle E2,5.2-3.5.2	232 581		503	Cap screw M5x8-8.8	023 154
4b	Coupling part E4-E8	200 682		505	Cap screw M5x8	023 379
6	Intermediate slider with brake E5-E8	237 323		506	Set screw M6x12-45	022 400
7a	Selection jack E4-E8	200 687		507	Sprung thrust piece B-M10	023 177
7b	Selector spring E4-E8	200 690		509	Shim 0.02x18.5x34	023 194
10	Knock-over bit E5	204 996		510	Shim 0.03x18.5x34	023 195
11	Holding-down jack E5	205 031		511	Shim 0.05x18.5x34	023 196
12	Fixed wire Ø2.8	223 862		512	Shim 0.1x18.5x34	023 197
13	Support	206 352		513	Shim 0.2x18.5x34	023 253

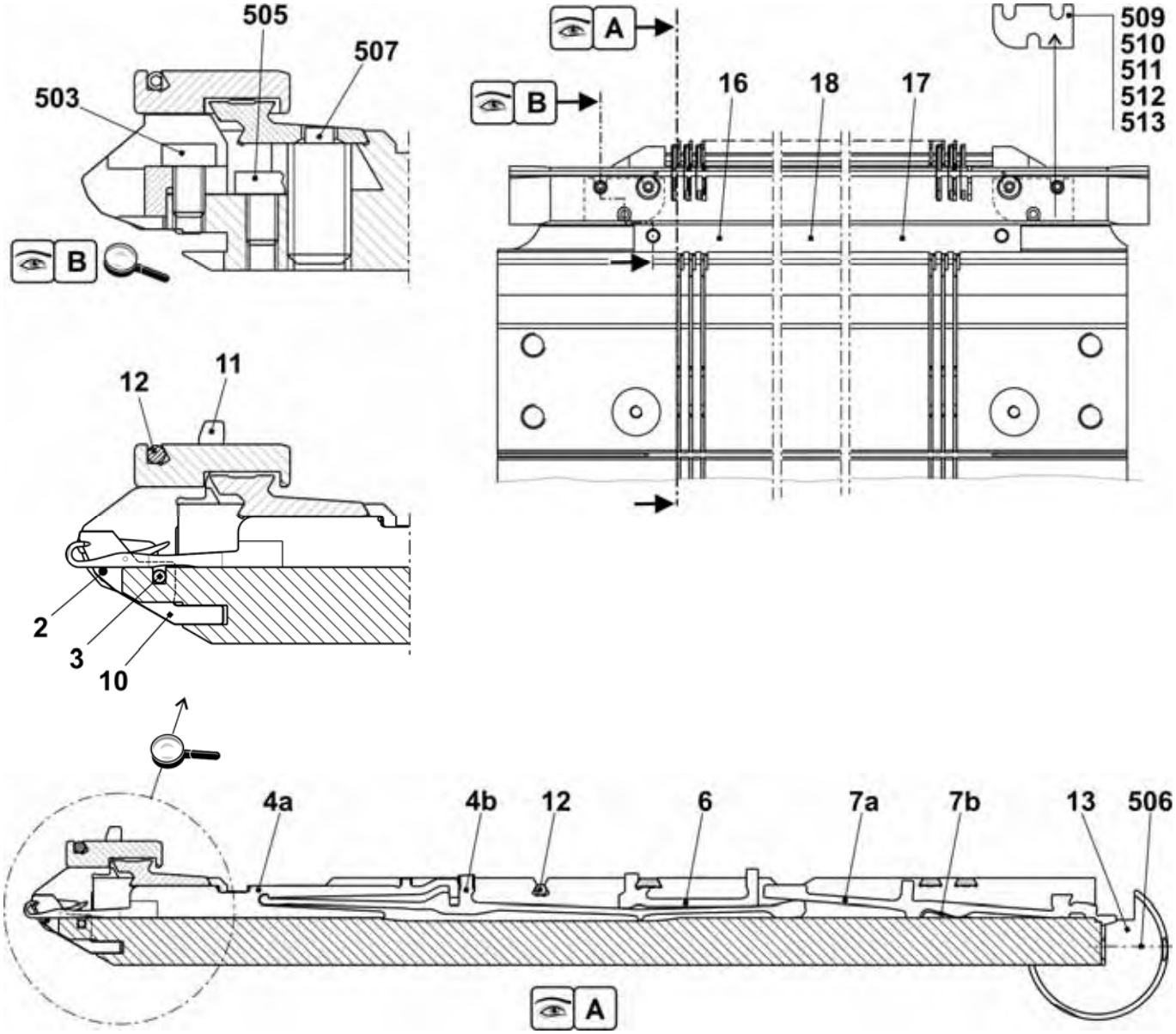

Continuation needle bed E2,5.2 mg

Pos	Designation	Ident No	Pos	Designation	Ident No
Σ	**Needle bed complete at the front + rear E2,5.2**	**239 227**	501	Cap screw M5x10	022 918
1	Needle bed at the front + rear E5	238 005	502	Cap screw M6x25	020 137
2	Holding-down jack bed at the rear E2,5.2 MG	240 012	504	Cap screw M5x22	023 193
3	Holding-down jack bed at the front E2,5.2 MG	240 011	30*	Adjusting piece	206 375
4	Limiter on the left E4-E8	205 343	31*	Set screw complete	207 712
5	Limiter on the right E4-E8	205 344	40*	Disk brush	235 612
8	Cover rail at the rear	237 379	41*	Container, plate brush	233 012
9	Cover rail at the front E5	237 377	42*	Disk brush	235 612
10	Cover rail	237 382	520*	Cap screw M5x12	020 032
11	Cover rail	237 383	521*	Adjusting washer P6x12x0.3	023 540

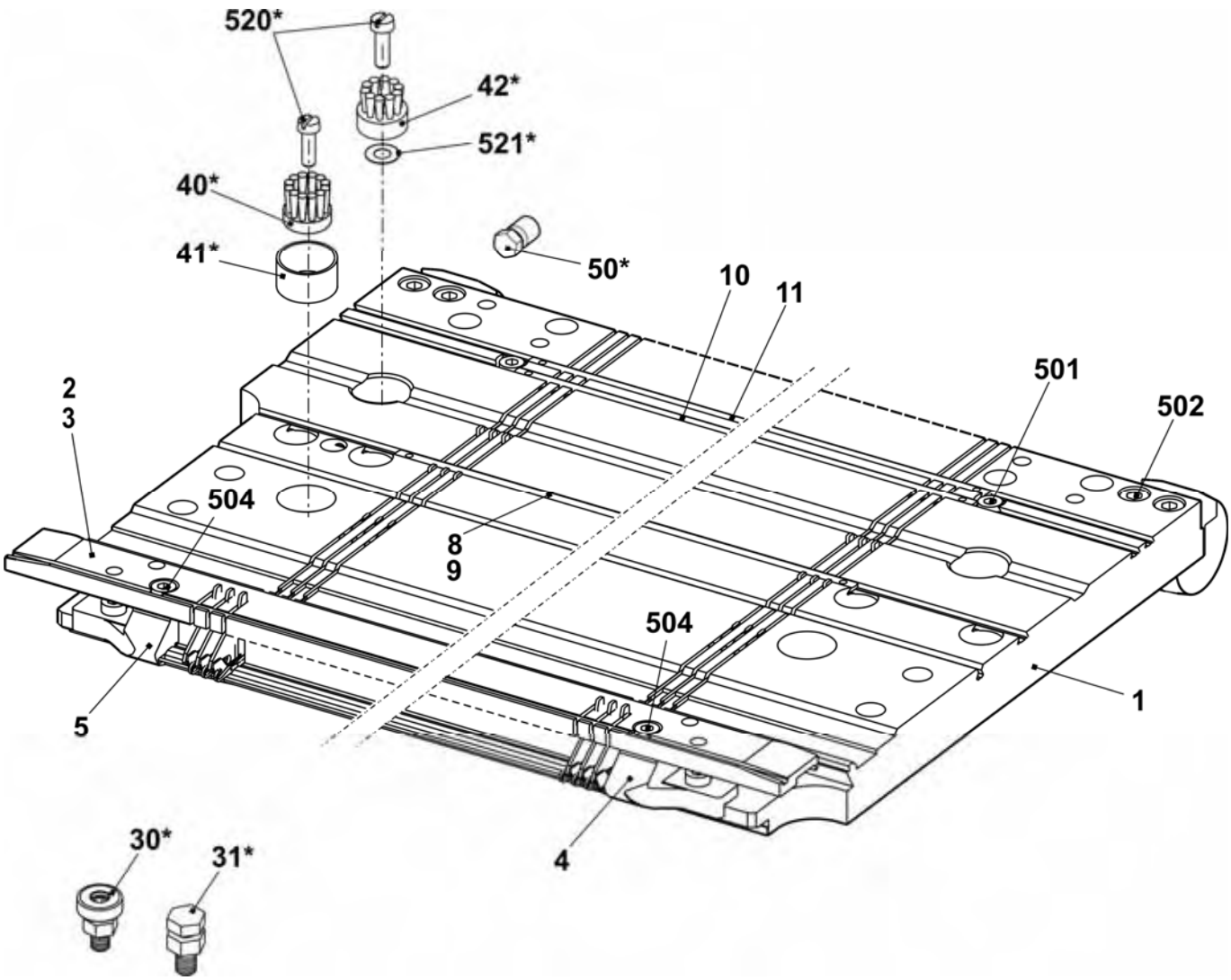

Needle bed E3,5.2 mg

Pos	*Designation*	*Ident No*		*Pos*	*Designation*	*Ident No*
Σ	**Needle bed complete at the front + rear E3,5.2**	**239 228**		16	Needle rail on the left	205 311
2	Spring steel wire E4-5 Ø1.0	237 406		17	Needle rail on the right	205 312
3	Spring steel wire Ø2.0	223 854		18	Needle rail in the middle	237 387
4a	Needle E2,5.2-3.5.2	232 581		503	Cap screw M5x8-8.8	023 154
4b	Coupling part E4-E8	200 682		505	Cap screw M5x8	023 379
6	Intermediate slider with brake E5-E8	237 323		506	Set screw M6x12-45	022 400
7a	Selection jack E4-E8	200 687		507	Sprung thrust piece B-M10	023 177
7b	Selector spring E4-E8	200 690		509	Shim 0.02x18.5x34	023 194
10	Knock-over bit E7	207 055		510	Shim 0.03x18.5x34	023 195
11	Holding-down jack E7	205 032		511	Shim 0.05x18.5x34	023 196
12	Fixed wire Ø2.8	223 862		512	Shim 0.1x18.5x34	023 197
13	Support	206 352		513	Shim 0.2x18.5x34	023 253

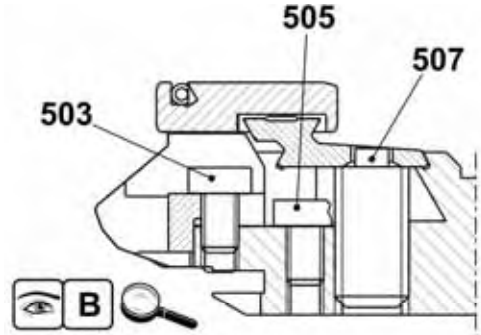

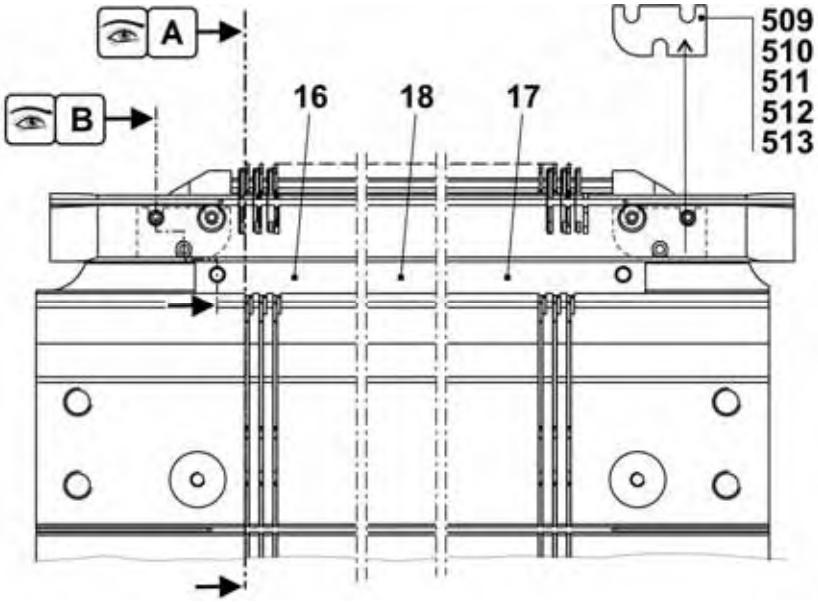

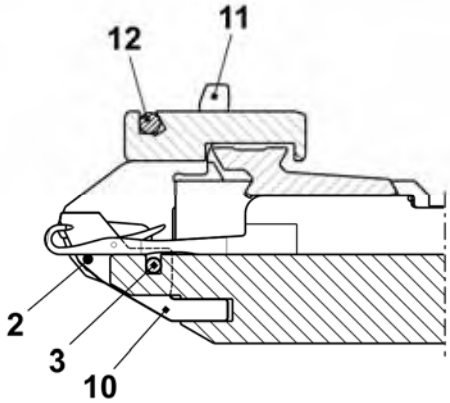

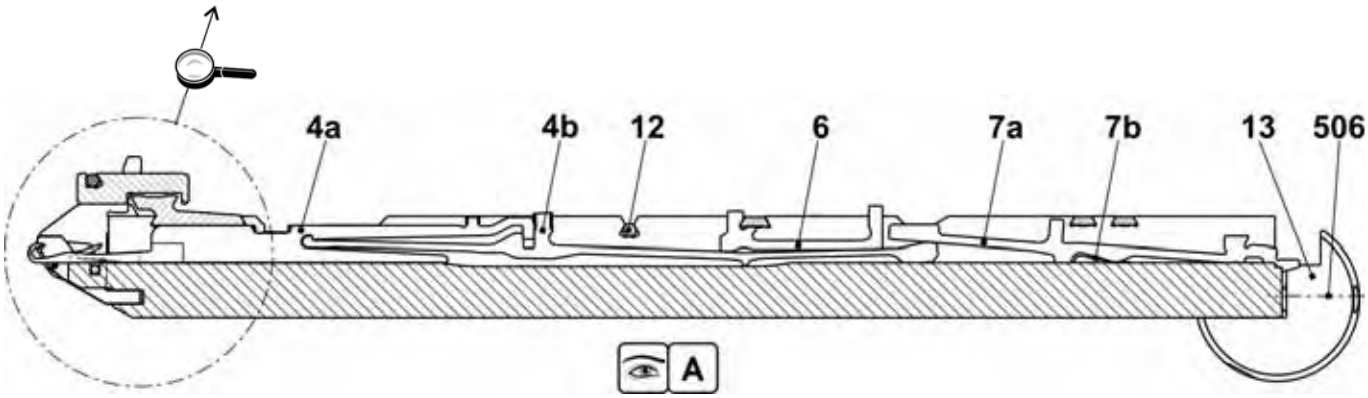

Continuation needle bed E3,5.2 mg

Pos	Designation	Ident No	Pos	Designation	Ident No
Σ	**Needle bed complete at the front + rear E3,5.2**	**239 228**	501	Cap screw M5x10	022 918
1	Needle bed at the front + rear E7	238 006	502	Cap screw M6x25	020 137
2	Holding-down jack bed at the rear E3,5.2	237 498	504	Cap screw M5x22	023 193
3	Holding-down jack bed at the front E3,5.2	237 490	30*	Adjusting piece	206 375
4	Limiter on the left E4-E8	205 343	31*	Set screw complete	207 712
5	Limiter on the right E4-E8	205 344	40*	Disk brush	235 612
8	Cover rail at the rear	237 379	41*	Container, plate brush	233 012
9	Cover rail at the front E3,5.2	238 018	42*	Disk brush	235 612
10	Cover rail	237 382	520*	Cap screw M5x12	020 032
11	Cover rail	237 383	521*	Adjusting washer P6x12x0.3	023 540

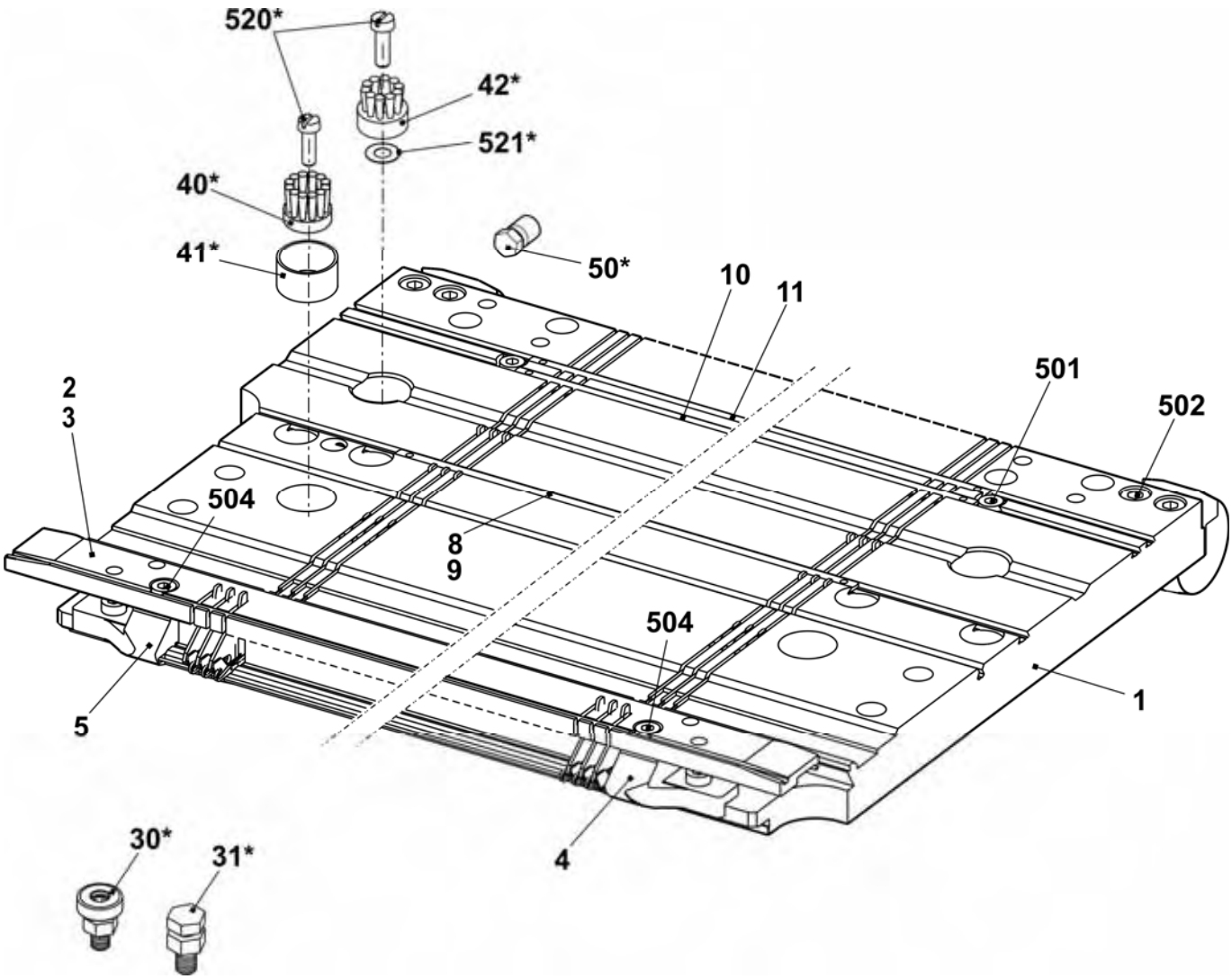

Needle bed E5.2 mg

Pos	Designation	Ident No	Pos	Designation	Ident No
Σ	**Needle bed complete at the front + rear E5.2 mg**	**240 013**	23	Needle rail on the left	205 311
4	Main trick wall E5.2	219 171	24	Needle rail on the right	205 312
6	Fixed wire Ø3.4	223 868	26	Support	206 352
7	Spring steel wire E4-5 Ø1.0	237 406	28	Needle rail in the middle	237 387
9a	Needle E5.2 vosa special 110.118-86	219 181	501	Cap screw M5x8-8.8 M	023 154
9b	Coupling part E5.2	219 188	504	Cap screw M5x12-8.8	022 943
11	Intermediate slider with brake E5.2	236 030	506	Set screw M6x12-45	022 400
12a	Selection jack E5.2	219 214	507	Sprung thrust piece B-M10	023 177
12b	Selector spring E5.2	219 265	508	Shim 0.02x18.5x34	023 194
13	Knock-over bit E5.2	221 367	509	Shim 0.03x18.5x34	023 195
14	Holding-down jack trick wall	227 716	510	Shim 0.05x18.5x34	023 196
21	Fixed wire Ø2.8	223 862	511	Shim 0.1x18.5x34	023 197
22	Spring steel wire Ø1.95	223 852	512	Shim 0.2x18.5x34	023 253

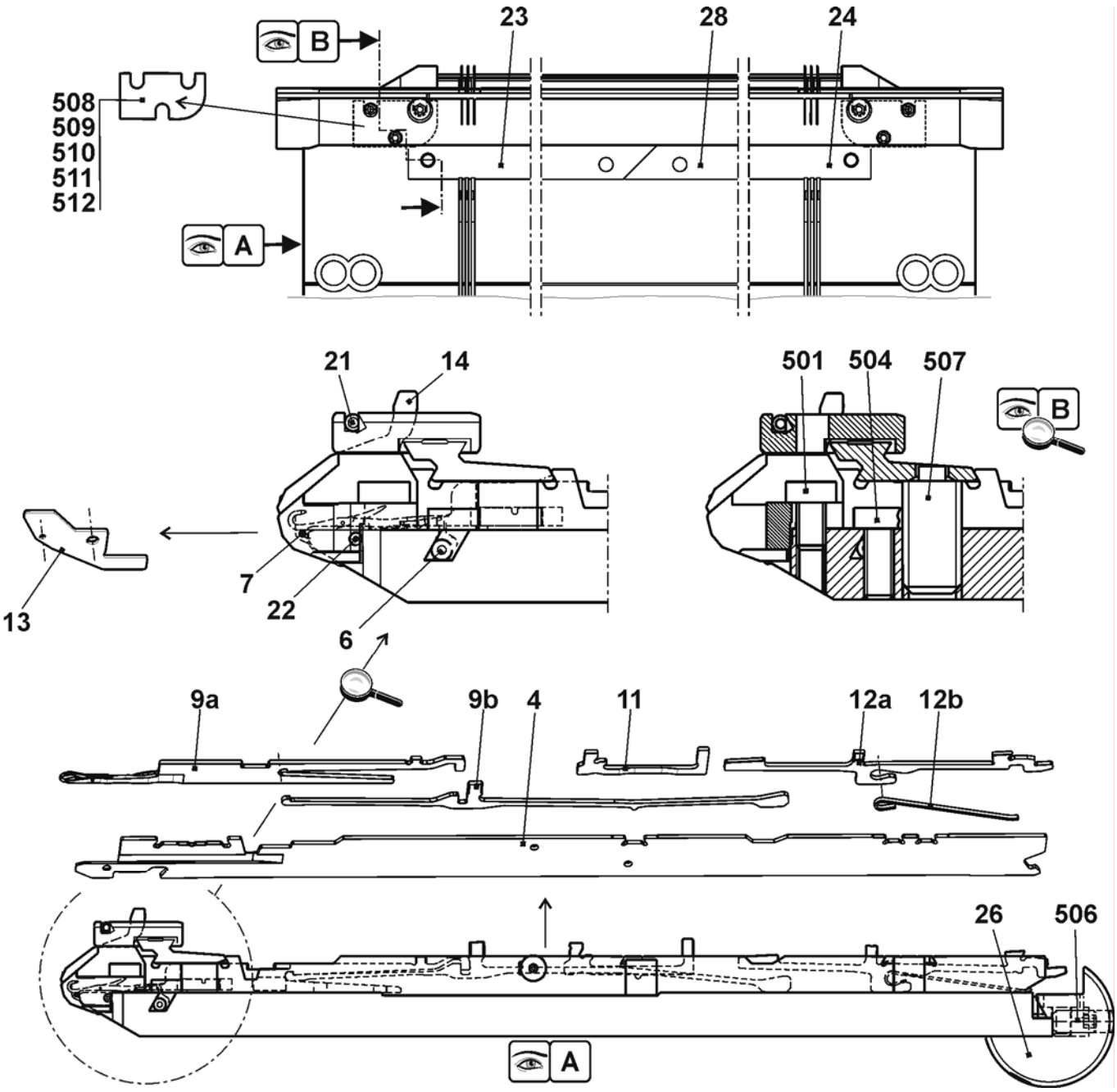

Continuation needle bed E5.2 mg

Pos	Designation	Ident No		Pos	Designation	Ident No
Σ	**Needle bed complete at the front + rear E5.2**	**240 013**		27	Stop screw	214 039
1	Needle bed at the front + rear E5.2	237 484		500	Cap screw M6X14	022 658
2	Holding-down jack bed at the front E5.2	237 491		502	Cap screw M5x8	023 379
3	Holding-down jack bed at the rear E5.2	237 499		503	Cap screw M5x22	023 193
5	Pressure slide	237 509		505	Set screw M3.5x3-1	020 512
8	Spring steel wire Ø2.0	223 854		30*	Adjusting piece	206 375
15	Limiter on the left E4-E8	205 343		31*	Set screw complete	207 712
16	Limiter on the right E4-E8	205 344		40*	Disk brush	235 612
17	Cover rail at the rear	237 379		41*	Container disk brush	233 012
18	Cover rail at the front E5.2	237 506		42*	Disk brush	235 612
19	Cover rail	237 382		520*	Cap screw M5x12	020 032
20	Cover rail	237 383		521*	Adjusting washer P6x12x0.3	023 540
25	Bush	206 090				

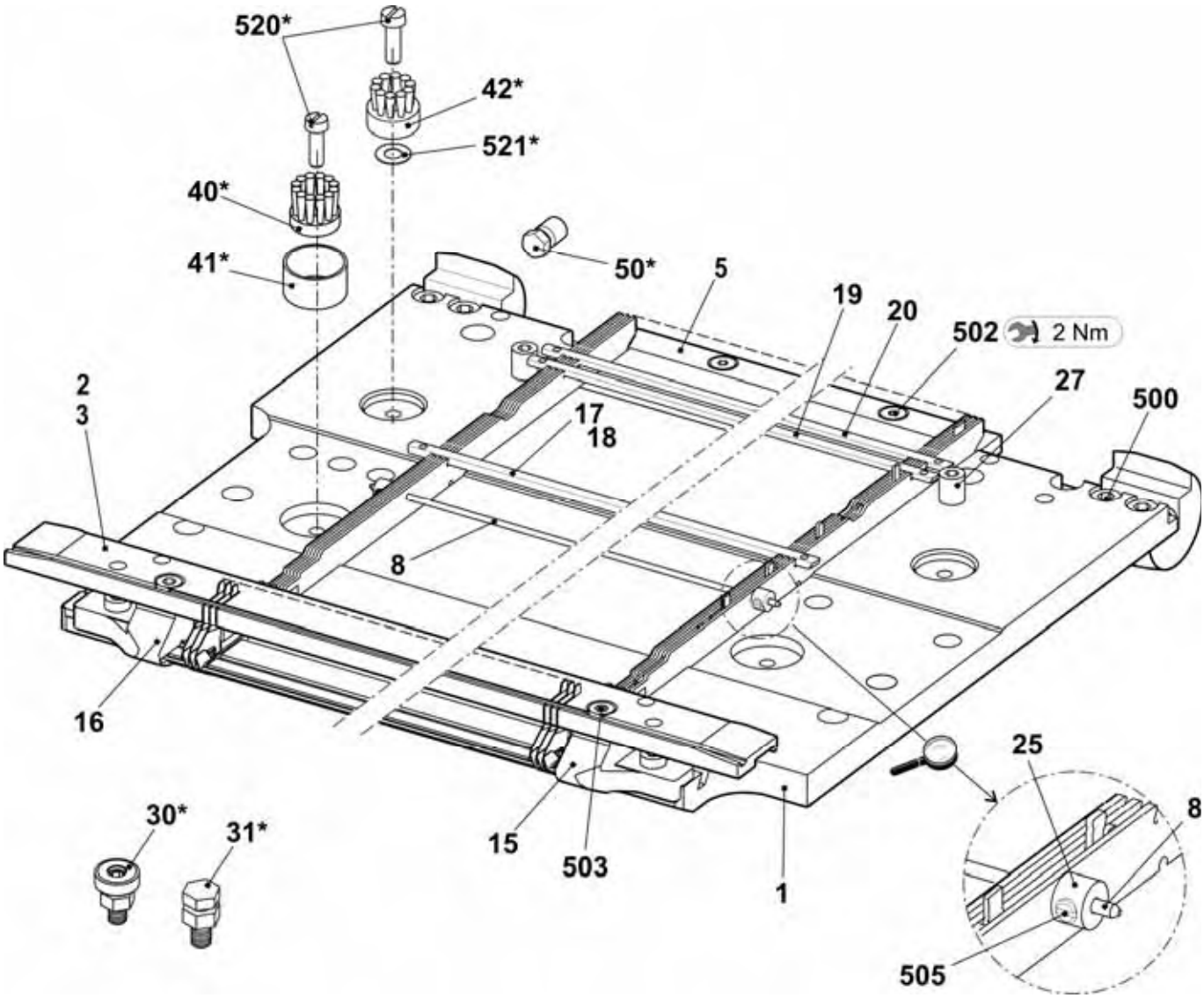

Needle bed E6.2 mg

Pos	Designation	Ident No		Pos	Designation	Ident No
Σ	**Needle bed complete at the front + rear E6.2**	**240 014**		23	Needle rail on the left	205 311
4	Main trick wall E12	205 355		24	Needle rail on the right	205 312
6	Fixed wire Ø3.4	223 868		26	Support	206 352
7	Spring steel wire E10-14 Ø0.6	223 849		28	Needle rail in the middle	237 387
9a	Needle E6.2	207 349		501	Cap screw M5x8-8.8 M	023 154
9b	Coupling part E10-12	200 683		504	Cap screw M5x12-8.8	022 943
11	Intermediate slider with brake E10	237 324		506	Set screw M6x12-45	022 400
12a	Selection jack E10-12	200 688		507	Sprung thrust piece B-M10	023 177
12b	Selector spring E10-12	200 691		508	Shim 0.02x18.5x34	023 194
13	Knock-over bit E12	205 013		509	Shim 0.03x18.5x34	023 195
14	Holding-down jack trick wall E12	227 821		510	Shim 0.05x18.5x34	023 196
21	Fixed wire Ø2.8	223 862		511	Shim 0.1x18.5x34	023 197
22	Spring steel wire Ø1.95	223 852		512	Shim 0.2x18.5x34	023 253

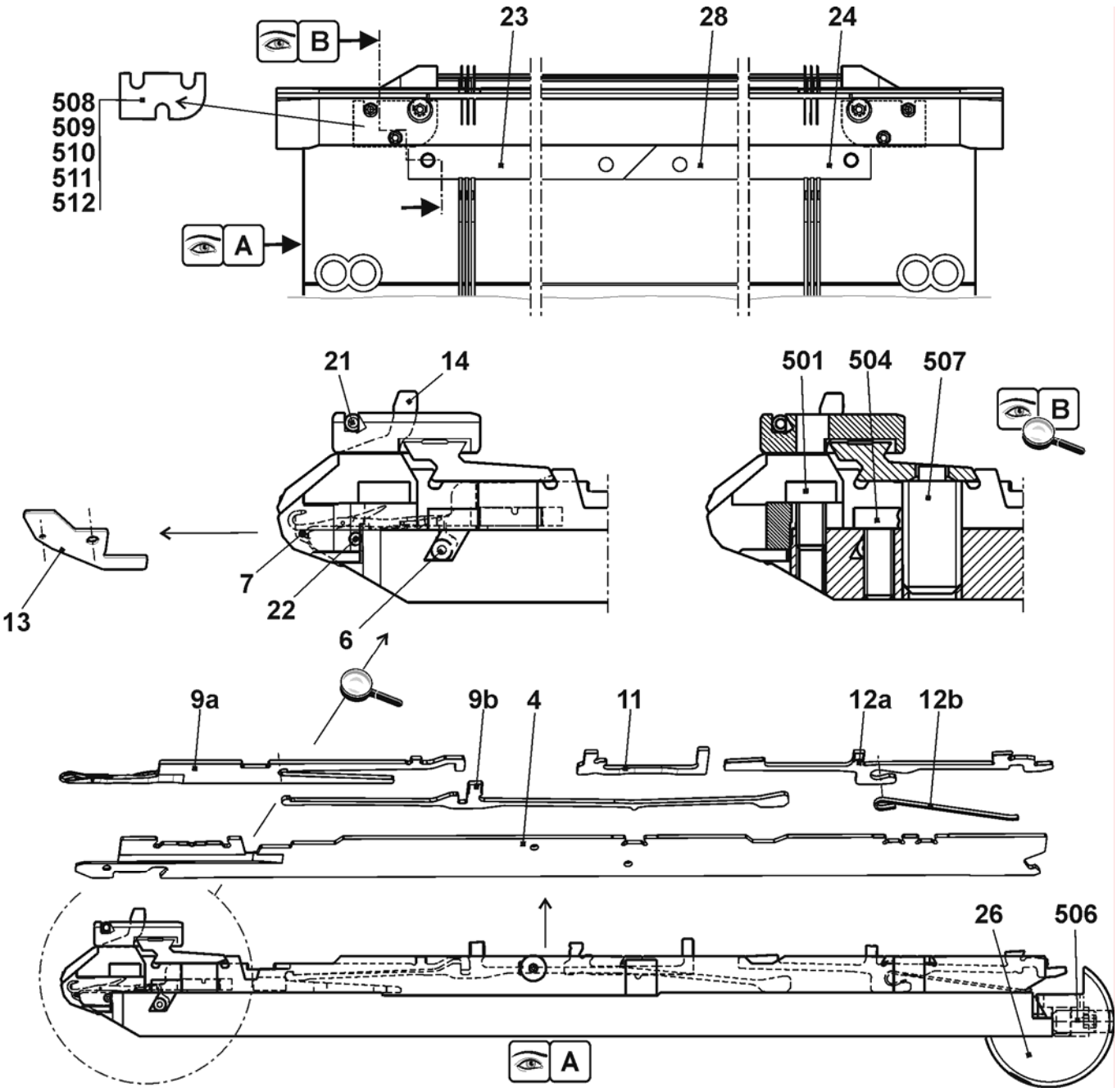

Continuation needle bed E6.2 mg

Pos	Designation	Ident No		Pos	Designation	Ident No
Σ	**Needle bed complete at the front + rear E6.2**	**240 014**		27	Stop screw	214 039
1	Needle bed at the front and rear E6.2	237 485		500	Cap screw M6X14	022 658
2	Holding-down jack bed at the front E6.2	237 492		502	Cap screw M5x8	023 379
3	Holding-down jack bed at the rear E6.2	237 500		503	Cap screw M5x22	023 193
5	Pressure slide	237 509		505	Set screw M3.5x3-1	020 512
8	Spring steel wire Ø2.0	223 854		30*	Adjusting piece	206 375
15	Limiter on the left E10-14	205 764		31*	Set screw complete	207 712
16	Limiter on the right E10-14	205 765		40*	Disk brush	235 612
17	Cover rail at the rear	237 379		41*	Container disk brush	233 012
18	Cover rail at the front E6.2	237 507		42*	Disk brush	235 612
19	Cover rail	237 382		520*	Cap screw M5x12	020 032
20	Cover rail	237 383		521*	Adjusting washer P6x12x0.3	023 540
25	Bush	206 090				

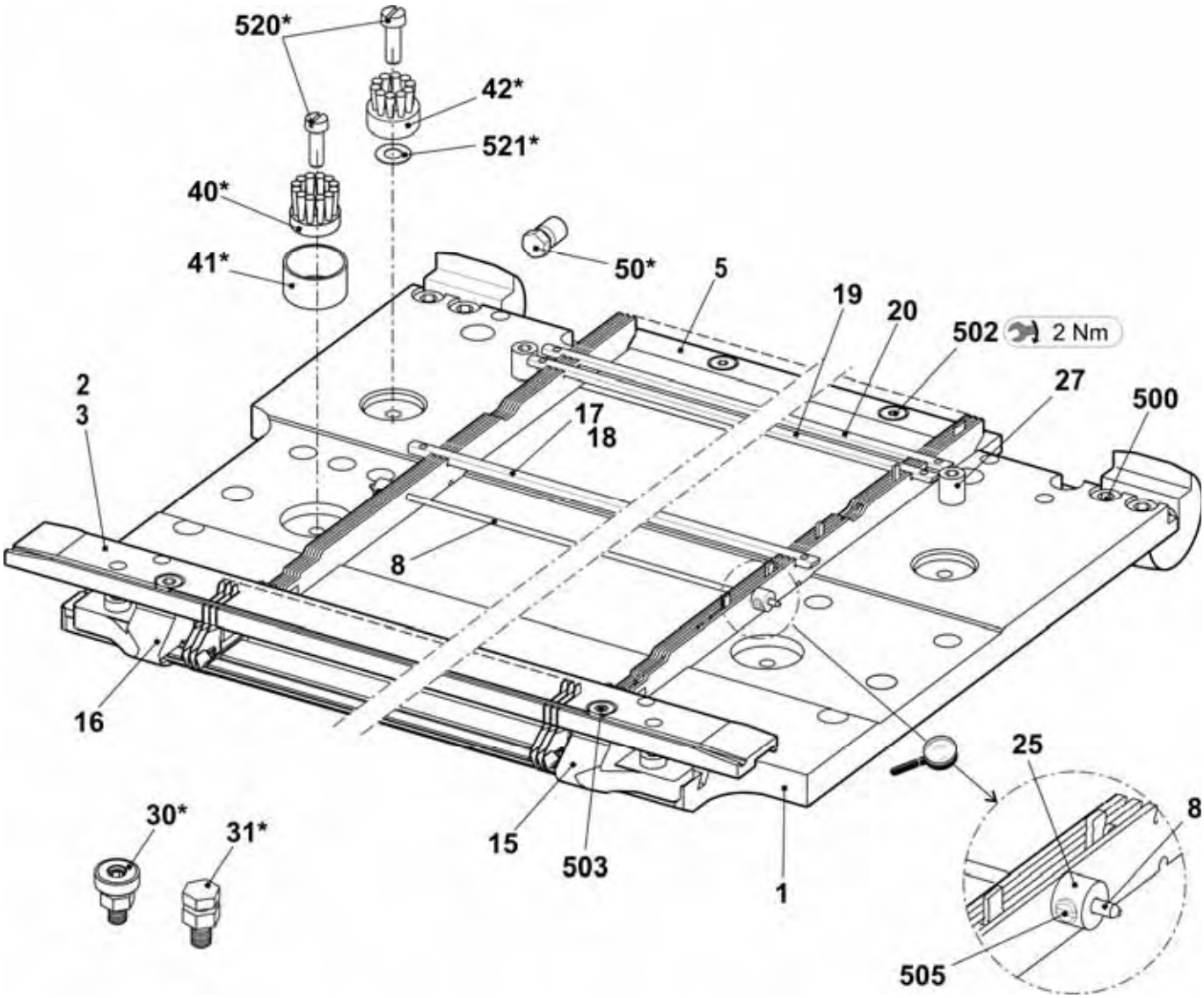

Needle bed E7.2 mg

Pos	Designation	Ident No		Pos	Designation	Ident No
Σ	**Needle bed complete at the front + rear E7.2**	**240 015**		23	Needle rail on the left	205 311
4	Main trick wall E14	209 574		24	Needle rail on the right	205 312
6	Fixed wire Ø3.4	223 868		26	Support	206 352
7	Spring steel wire E10-14 Ø0.6	223 849		28	Needle rail in the middle	237 387
9a	Needle E7.2 vosa special 112.70-62	225 230		501	Cap screw M5x8-8.8 M	023 154
9b	Coupling part E14	209 633		504	Cap screw M5x12-8.8	022 943
11	Intermediate slider with brake E14	237 373		506	Set screw M6x12-45	022 400
12	Selection jack with spring E14	224 725		507	Sprung thrust piece B-M10	023 177
				508	Shim 0.02x18.5x34	023 194
13	Knock-over bit E14	209 649		509	Shim 0.03x18.5x34	023 195
14	Holding-down jack trick wall E14	235 262		510	Shim 0.05x18.5x34	023 196
21	Fixed wire Ø2.8	223 862		511	Shim 0.1x18.5x34	023 197
22	Spring steel wire Ø1.95	223 852		512	Shim 0.2x18.5x34	023 253

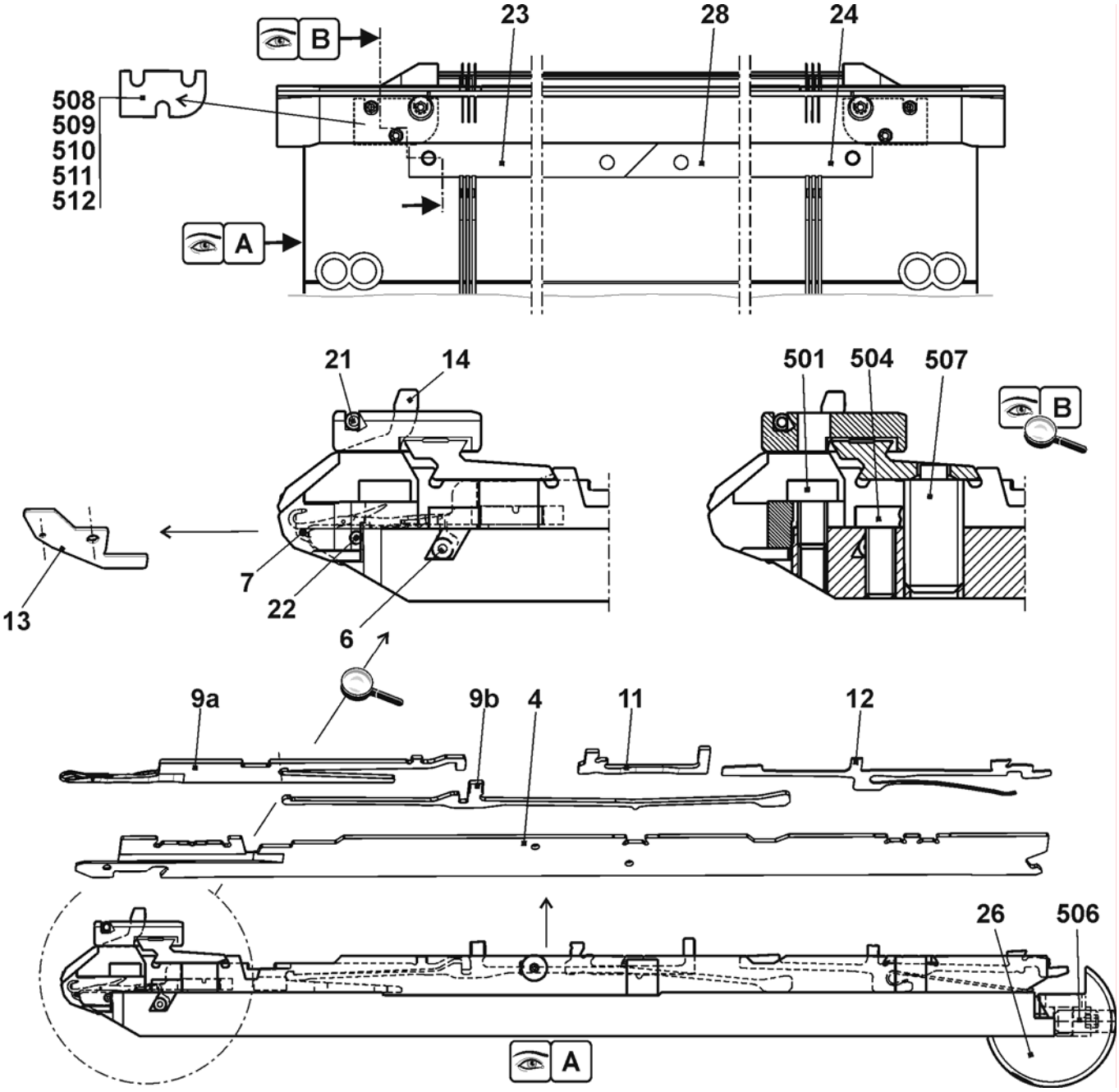

Continuation needle bed E7.2 mg

Pos	Designation	Ident No		Pos	Designation	Ident No
Σ	**Needle bed complete at the front + rear E7.2**	**240 015**				
1	Needle bed at the front + rear E7.2	237 486		27	Stop screw	214 039
2	Holding-down jack bed at the front E7.2	237 493		500	Cap screw M6X14	022 658
3	Holding-down jack bed at the rear E7.2	237 501		502	Cap screw M5x8	023 379
5	Pressure slide	237 509		503	Cap screw M5x22	023 193
8	Spring steel wire Ø2.0	223 854		505	Set screw M3.5x3-1	020 512
15	Limiter on the left E10-14	205 764		30*	Adjusting piece	206 375
16	Limiter on the right E10-14	205 765		31*	Set screw complete	207 712
17	Cover rail at the rear	237 379		40*	Disk brush	235 612
18	Cover rail at the front E7.2	237 508		41*	Container disk brush	233 012
19	Cover rail	237 382		42*	Disk brush	235 612
20	Cover rail	237 383		520*	Cap screw M5x12	020 032
25	Bush	206 090		521*	Adjusting washer P6x12x0.3	023 540

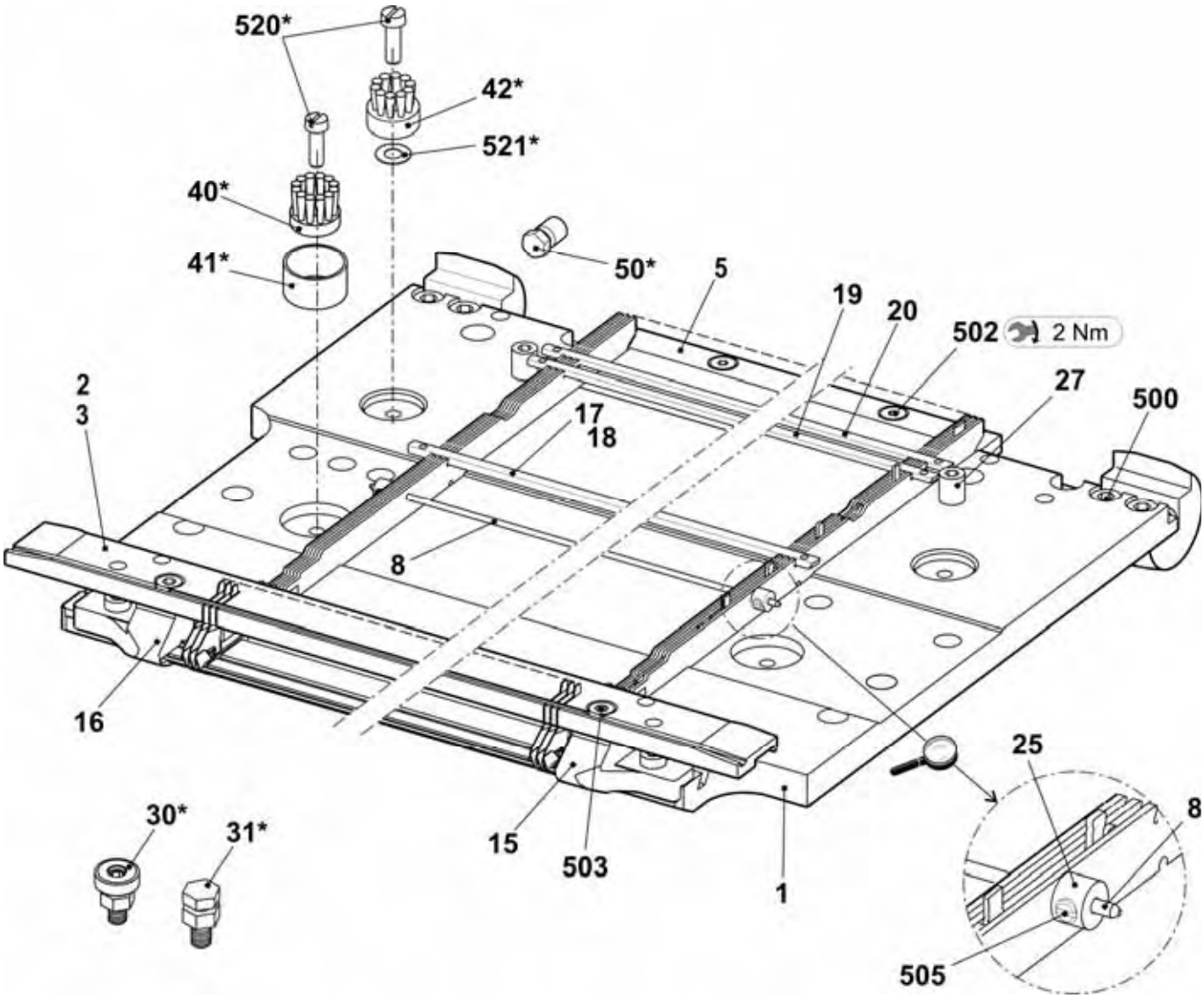

Needle bed E8.2 mg

Pos	Designation	Ident No	Pos	Designation	Ident No
Σ	**Needle bed complete at the front + rear E8.2 mg**	**251 116**			
4	Main trick wall E16	245 319	24	Needle rail on the right	205 312
6	Fixed wire Ø3.4	223 868	26	Support	206 352
7	Spring steel wire Ø0.5	238 942	28	Needle rail in the middle	237 387
8	Spring steel wire Ø2	251 085	501	Cap screw M5x8-8.8 M	023 154
9a	Needle E18/14	240 026	504	Cap screw M5x12-8.8	022 943
9b	Coupling part E16-20	220 382	506	Set screw M6x12-45	022 400
11	Intermediate slider with brake E16	237 326	507	Sprung thrust piece B-M10	023 177
12	Selection jack E16-20	222 265	508	Shim 0.02x18.5x34	023 194
13	Knock-over bit E16	222 503	509	Shim 0.03x18.5x34	023 195
14	Holding-down jack E16	222 504	510	Shim 0.05x18.5x34	023 196
21	Fixed wire Ø2.8	238 950	511	Shim 0.1x18.5x34	023 197
23	Needle rail on the left	205 311	512	Shim 0.2x18.5x34	023 253

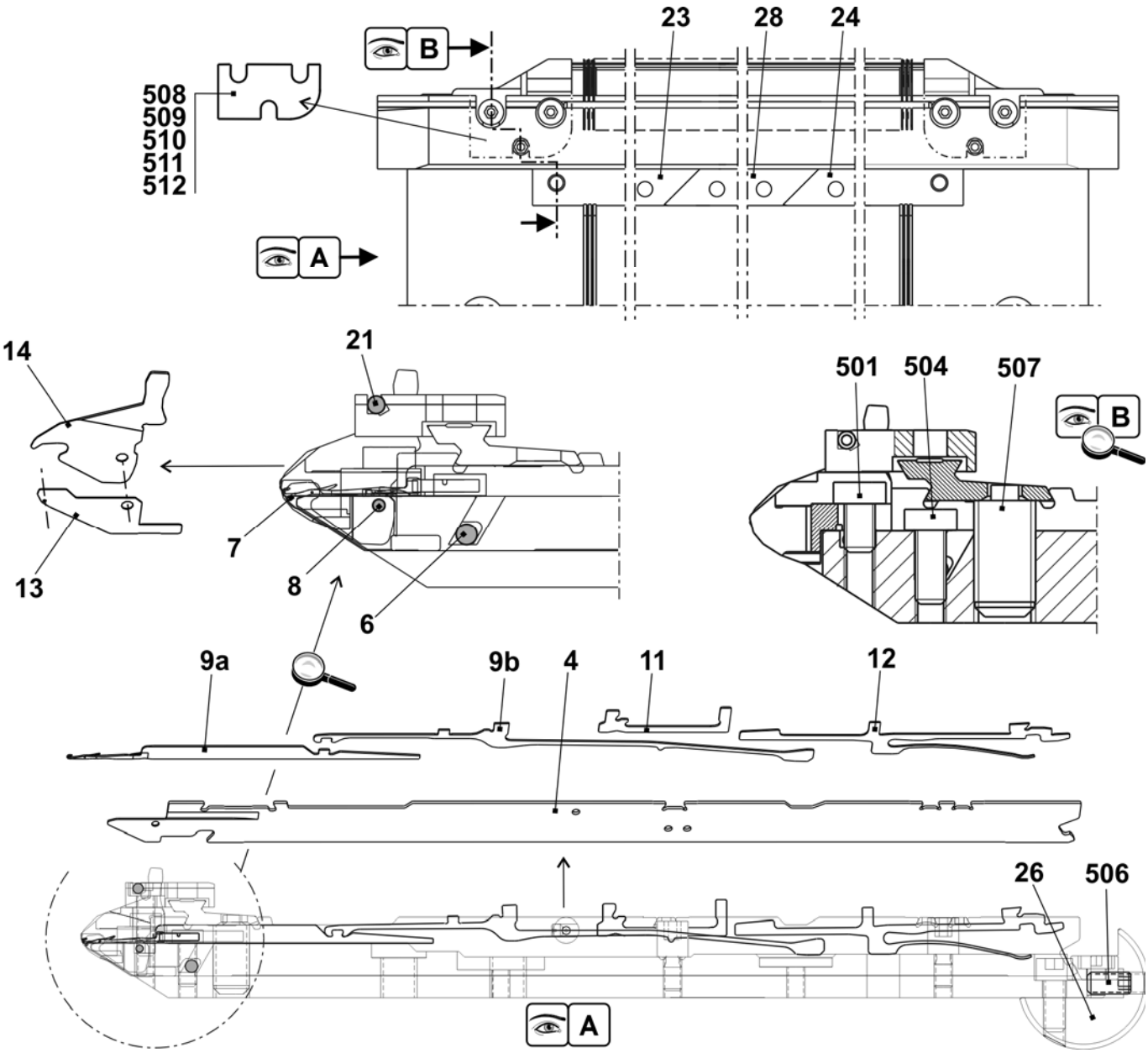

Continuation needle bed E8.2 mg

Pos	Designation	Ident No	Pos	Designation	Ident No
Σ	**Needle bed complete at the front + rear E8.2**	**251 116**			
1	Needle bed at the front rear E16	251 077	27	Stop screw	214 039
2	Holding-down jack bed at the front E16	238 917	500	Cap screw M6X14	022 658
3	Holding-down jack bed at the rear E16	238 920	502	Cap screw M5x8	023 379
5	Pressure slide	237 509	503	Cap screw M5x22	023 193
8	Spring steel wire Ø2.0	251 085	505	Set screw M3.5x3-1	020 512
15	Limiter on the left E16-E20	220 821	30*	Adjusting piece	206 375
16	Limiter on the right E16-E20	220 822	31*	Set screw complete	207 712
17	Cover rail at the rear	237 379	40*	Disk brush	235 612
18	Cover rail at the front E16	238 925	41*	Container disk brush	233 012
19	Cover rail	237 382	42*	Disk brush	235 612
20	Cover rail	237 383	520*	Cap screw M5x12	020 032
25	Bush	206 090	521*	Adjusting washer P6x12x0.3	023 540

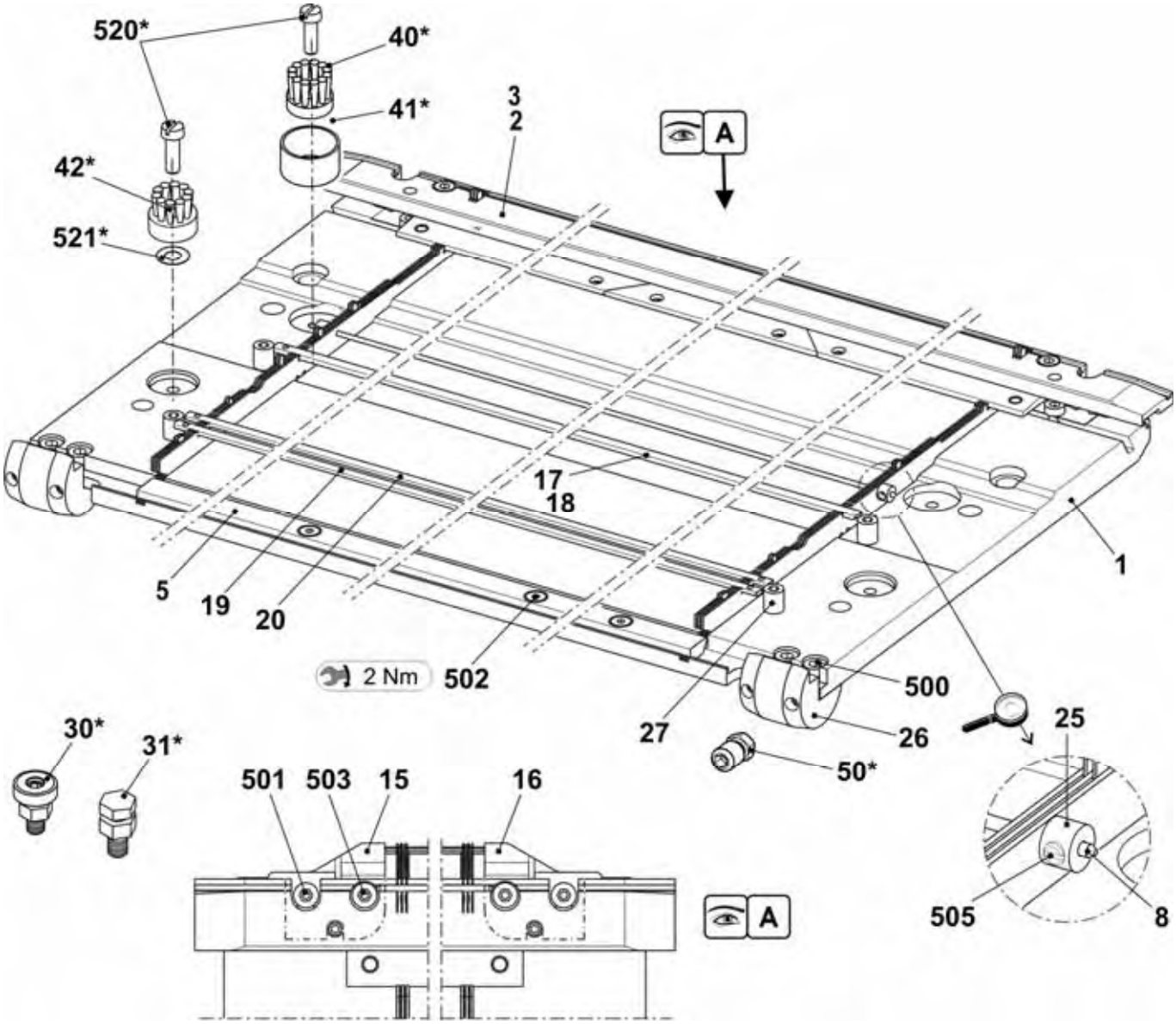

Left clamping/cutting bed E5-8

Pos	*Designation*		*Ident No*		*Pos*	*Designation*	*Ident No*
Σ	**Left clamping/cutting bed E5-8**				10	Clamp on the left complete	210 462
	E2,5.2/3,5.2/5.2/5m.4/7m.5/7m.8/8m.7		**245 333**		11	Coupling part E4-E8	200 682
1	Guide plate on the left E5-14		244 784		12	Intermediate slider with brake E5-8	237 323
	1a	Cover rail	211 358		13	Selection jack E4-E8	200 687
	1b	Cover rail	209 223		14	Selector spring E4-E8	200 690
	1c	Cover rail	209 224		500	Cap screw M4x10	023 136
	1d	Fixed wire	215 927		503	Hexagon nut M4-8	023 046
	1e	Bolt	208 094		504	Washer 4	020 870
	1f	Axle	211 349		505	Washer 4.3x7x0.5	022 153
	1g	Guide pin	211 351		507	Circlip 3.2	021 019
5	Cover on the left complete		211 771		508	Tension spring 5x0.5x17.4	023 377
6	Catch hook on the left		213 151		509	Compression spring 0.8x4x26.3	023 333
7	Slider E4-8		211 096		510	Ball 5	023 309
8	Tuck needle on the left E4-8		211 804		520*	Cap screw M6x20	244 824
9	Blade		210 422		521*	Washer 7.6x11.6x1.5	023 334

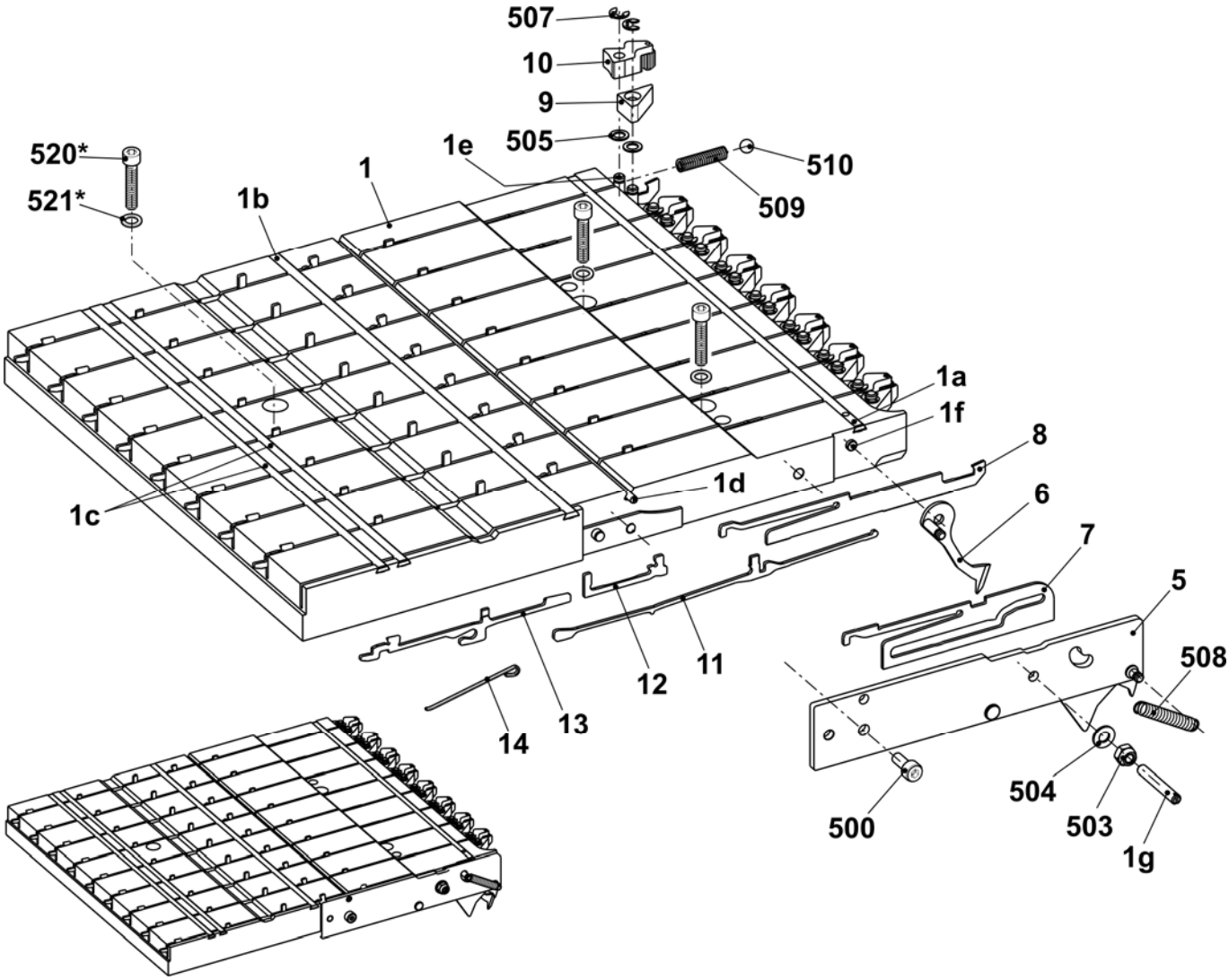

Left clamping/cutting bed E10-14

Pos	Designation		Ident No	Pos	Designation	Ident No
Σ	**Left clamping/cutting bed E10-14**			10	Clamp on the left complete	210 462
	E6.2/7.2/6.2(E12m.10)/10m.12		**245 335**	11	Coupling part E4-E8	200 682
1	Guide plate on the left E5-14		244 784	12	Intermediate slider with brake E5-8	237 323
	1a	Cover rail	211 358	13	Selection jack E4-E8	200 687
	1b	Cover rail	209 223	14	Selector spring E4-E8	200 690
	1c	Cover rail	209 224	500	Cap screw M4x10	023 136
	1d	Fixed wire	215 927	503	Hexagon nut M4-8	023 046
	1e	Bolt	208 094	504	Washer 4	020 870
	1f	Axle	211 349	505	Washer 4.3x7x0.5	022 153
	1g	Guide pin	211 351	507	Circlip 3.2	021 019
5	Cover on the left complete E10-14		251 120	508	Tension spring 4x0.55x18.9	023 392
6	Catch hook on the left E10-14		251 377	509	Compression spring 0.8x4x26.3	023 333
7	Slider E10-14		251 117	510	Ball 5	023 309
8	Tuck needle on the left E10-14		211 809	520*	Cap screw M6x20	244 824
9	Blade		210 422	521*	Washer 7.6x11.6x1.5	023 334

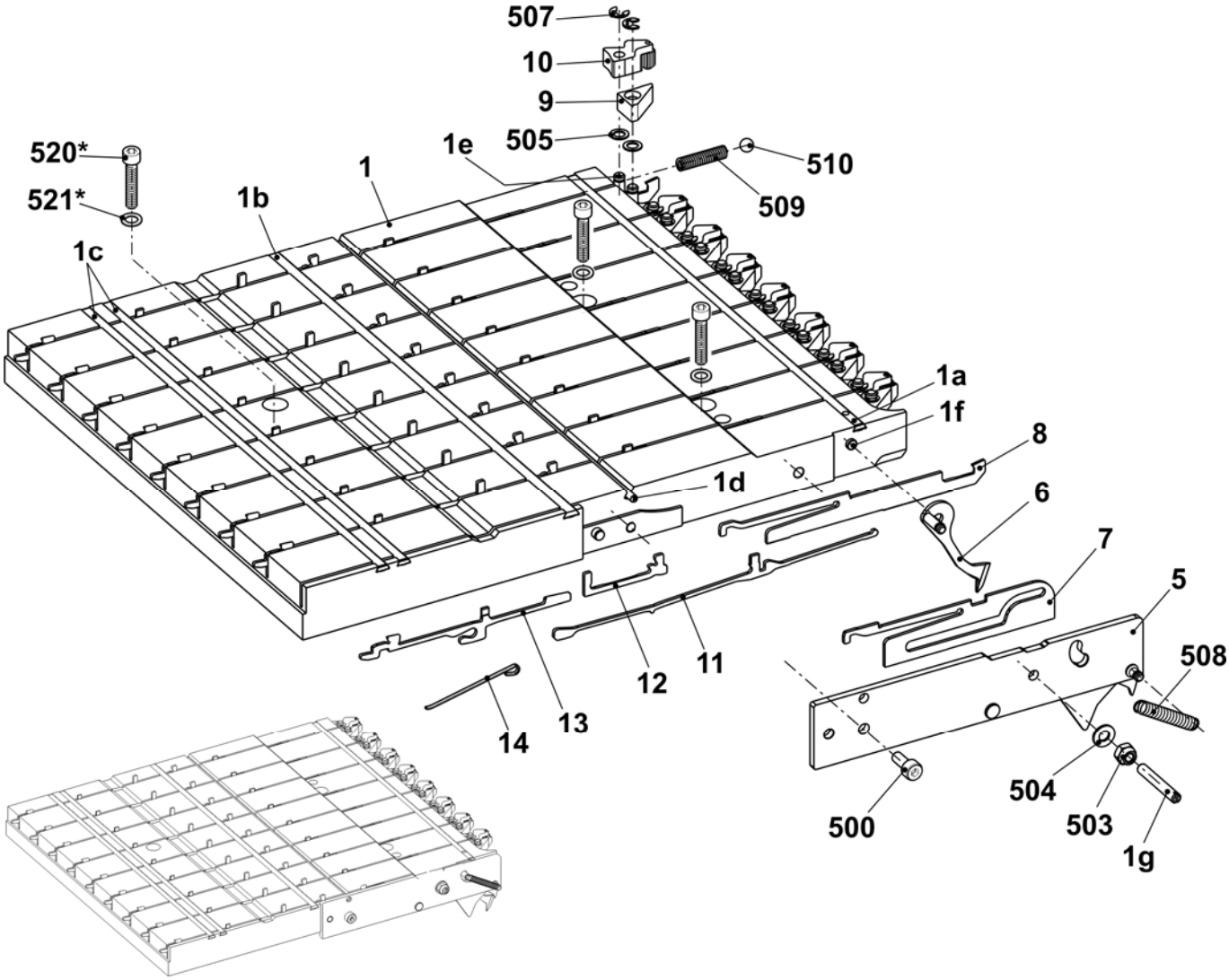

Left clamping/cutting bed E16-18

Pos	Designation		Ident No	Pos	Designation	Ident No
Σ				10	Clamp on the left complete	210 462
	Left clamping/cutting bed E16-18 + E8.2		**245 337**	11	Coupling part E10-12	200 683
1	Guide plate on the left E16-20		244 810	12	Intermediate slider with brake E10-12	237 324
	1a	Cover rail	211 358	13	Selection jack E10-12	200 688
	1b	Cover rail	209 223	14	Selector spring E10-12	200 691
	1c	Cover rail	209 224	500	Cap screw M4x10	023 136
	1d	Fixed wire	215 927	503	Hexagon nut M4-8	023 046
	1e	Bolt	208 094	504	Washer 4	020 870
	1f	Axle	211 349	505	Washer 4.3x7x0.5	022 153
	1g	Guide pin	211 351	507	Circlip 3.2	021 019
5	Cover on the left complete E16-20		221 114	508	Tension spring 4x0.55x18.9	023 392
6	Catch needle on the left E16-18		243 254	509	Compression spring 0.8x4x26.3	023 333
7	Slider E16-20		221 106	510	Ball 5	023 309
8	Tuck needle on the left E16-20		221 111	520*	Cap screw M6x20	244 824
9	Blade		210 422	521*	Washer 7.6x11.6x1.5	023 334

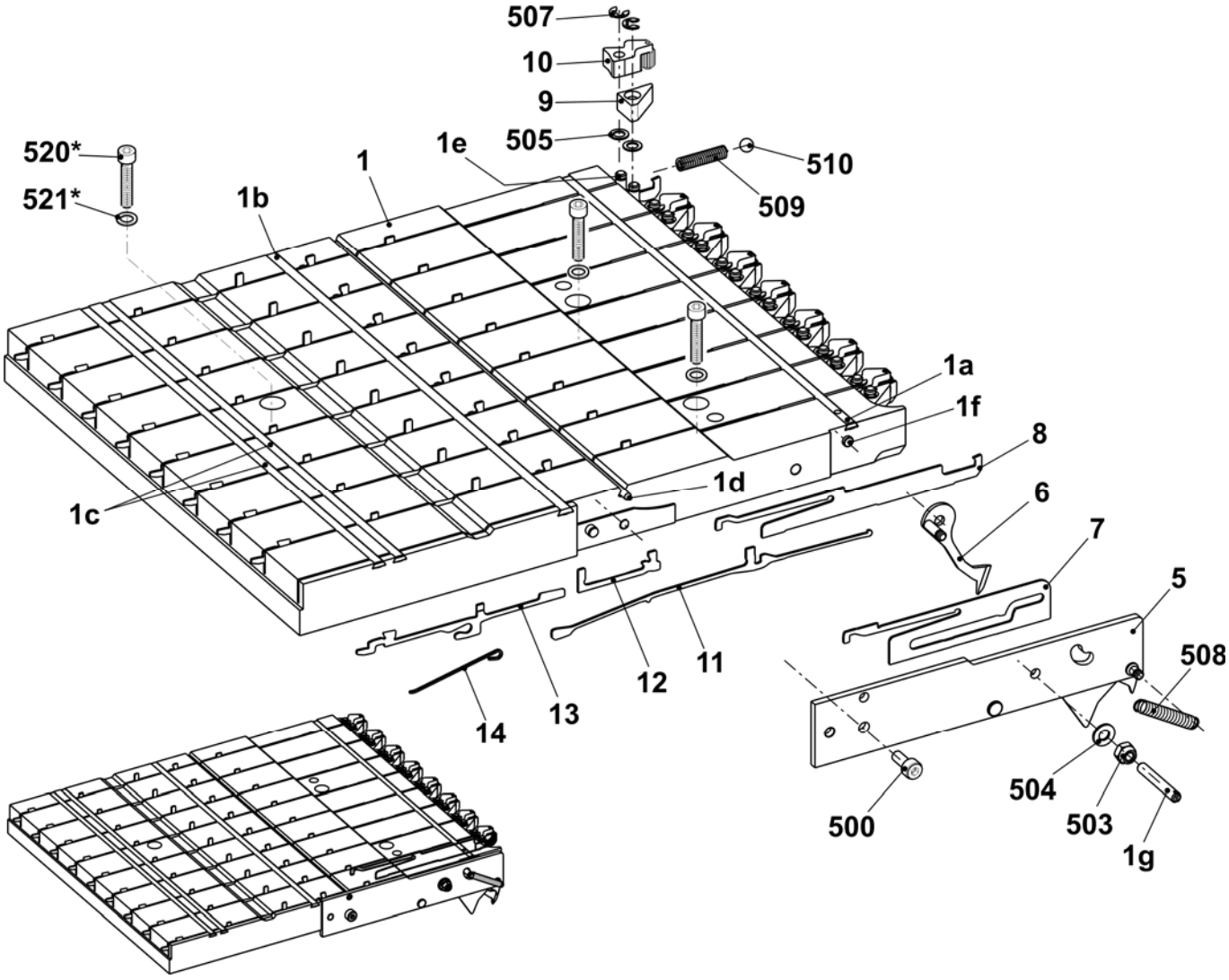

Right clamping/cutting bed E5-8

Pos	Designation		Ident No	Pos	Designation	Ident No
Σ	**Right clamping/cutting bed E5-8**			10	Clamp on the right complete	210 464
	E2,5.2/3,5.2/5.2/5m.4/7m.5/7m.8/8m.7		**245 334**	11	Coupling part E4-E8	200 682
1	Guide plate E5-14		245 341	12	Intermediate slider with brake E5-E8	237 323
	1a	Cover rail	211 358	13	Selection jack E4-E8	200 687
	1b	Cover rail	209 223	14	Selector spring E4-E8	200 690
	1c	Cover rail	209 224	500	Cap screw M4x10	023 136
	1d	Fixed wire	215 927	503	Hexagon nut M4	023 046
	1e	Bolt	208 094	504	Washer 4	020 870
	1f	Axle	211 349	505	Washer 4.3x7x0.5	022 153
	1g	Guide pin	211 351	507	Circlip 3.2	021 019
5	Cover on the right complete		211 347	508	Tension spring 5x0.55x18.9	023 377
6	Catch hook on the right		213 150	509	Compression spring 0.8x4x26.3	023 333
7	Slider E4-8		211 096	510	Ball DIN 5401 - 5	023 309
8	Tuck needle on the right E4-8		210 420	520*	Cap screw M6x20	244 824
9	Blade		210 422	521*	Washer 7.6x11.6x1.5	023 334

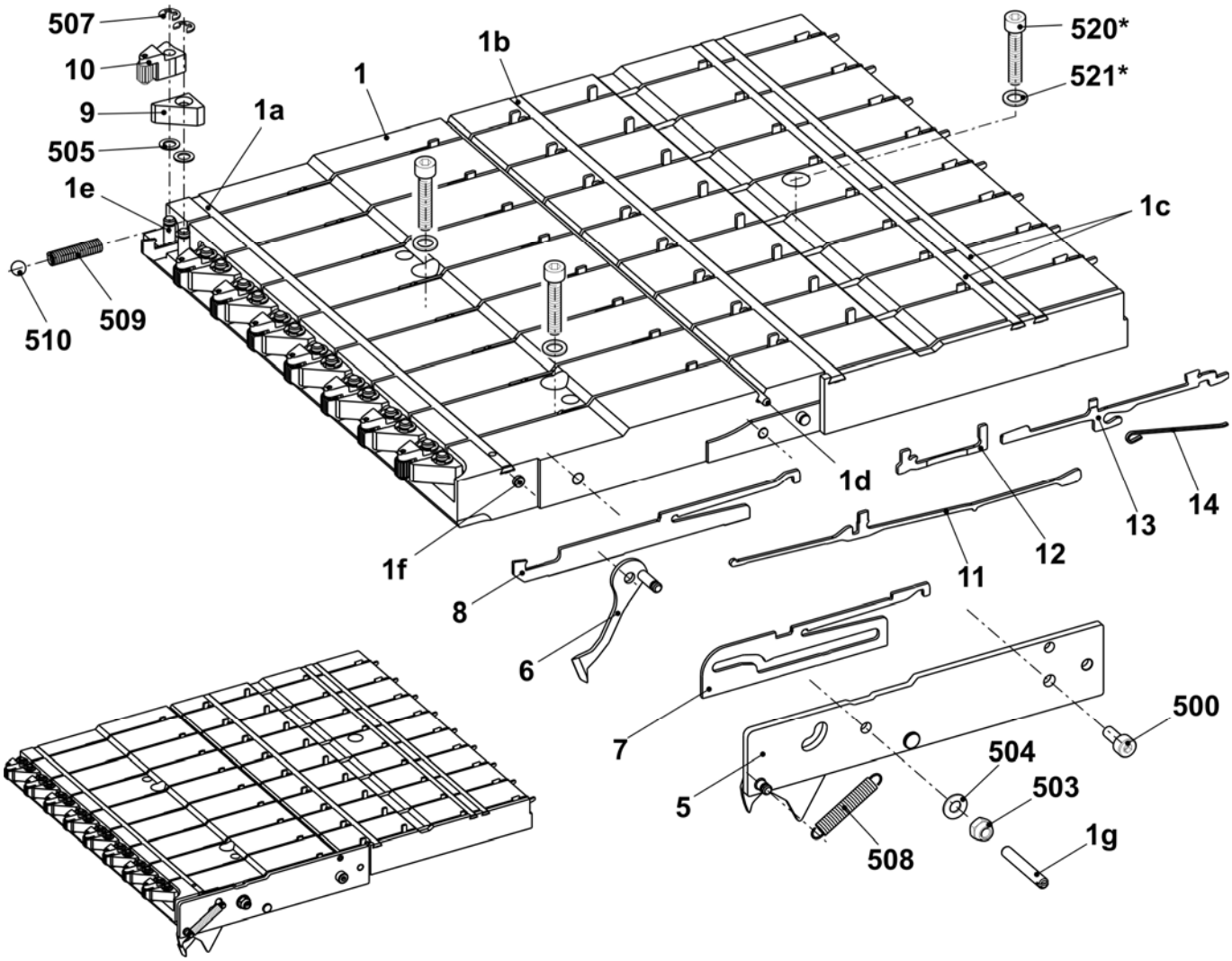

Right clamping/cutting bed E10-14

Pos	*Designation*		*Ident No*		*Pos*	*Designation*	*Ident No*
Σ	**Right clamping/cutting bed E10-14**				10	Clamp on the right complete	210 464
	E6.2/7.2/6.2(E12m.10)/10m.12		**245 336**		11	Coupling part E4-E8	200 682
1	Guide plate E5-14		245 341		12	Intermediate slider with brake E5-E8	237 323
	1a	Cover rail	211 358		13	Selection jack E4-E8	200 687
	1b	Cover rail	209 223		14	Selector spring E4-E8	200 690
	1c	Cover rail	209 224		500	Cap screw M4x10	023 136
	1d	Fixed wire	215 927		503	Hexagon nut M4	023 046
	1e	Bolt	208 094		504	Washer 4	020 870
	1f	Axle	211 349		505	Washer 4.3x7x0.5	022 153
	1g	Guide pin	211 351		507	Circlip 3.2	021 019
5	Cover on the left complete E10-14		251 119		508	Tension spring 4x0.55x18.9	023 392
6	Catch hook on the left E10-14		251 378		509	Compression spring 0.8x4x26.3	023 333
7	Slider E10-14		251 117		510	Ball DIN 5401 - 5	023 309
8	Tuck needle on the right E10-14		210 249		520*	Cap screw M6x20	244 824
9	Blade		210 422		521*	Washer 7.6x11.6x1.5	023 334

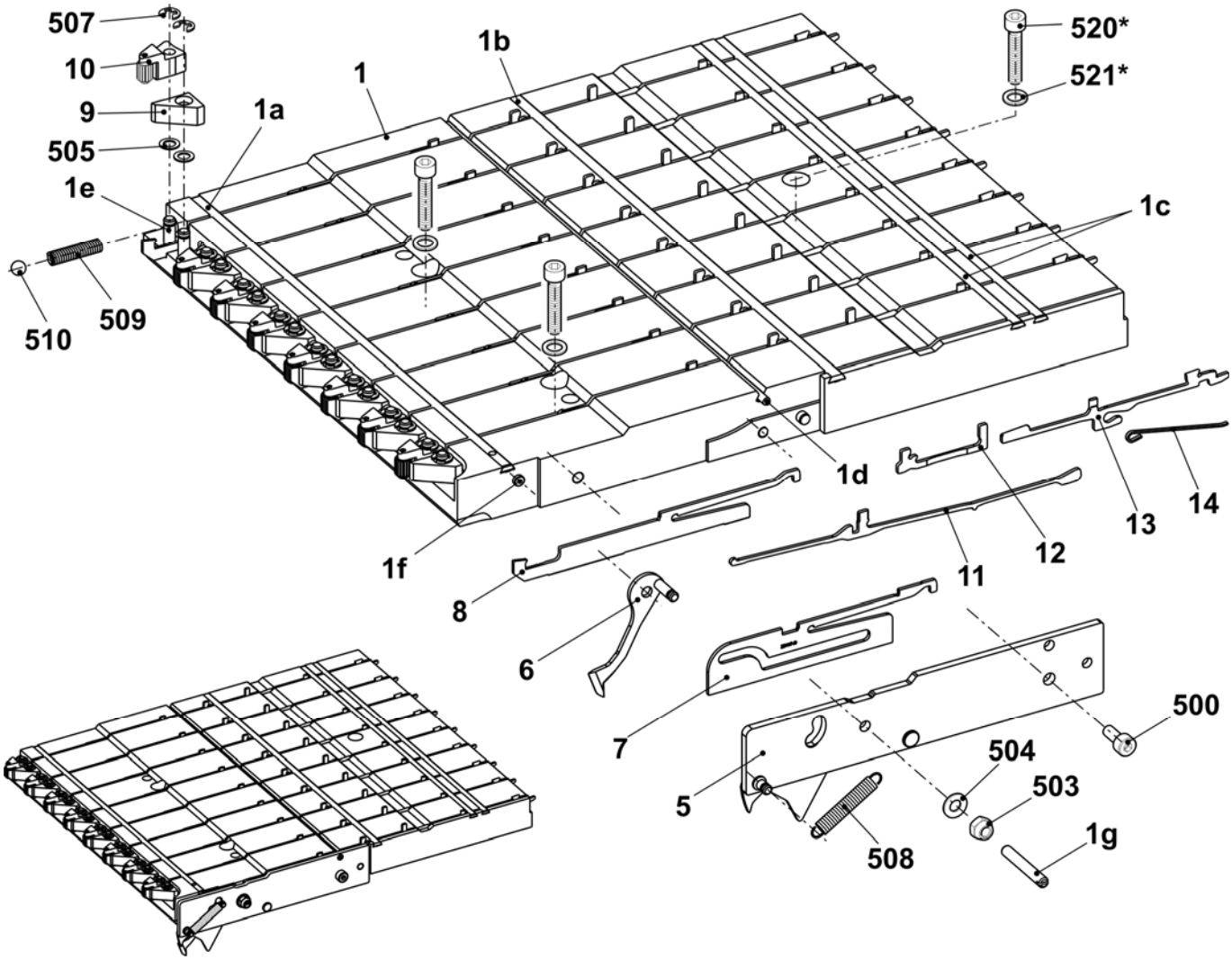

Right clamping/cutting bed E16-18

Pos	Designation		Ident No	Pos	Designation	Ident No
Σ				10	Clamp on the right complete	210 464
	Right clamping/cutting bed E16-18 + E8.2		**245 338**	11	Coupling part E10-12	200 683
1	Guide plate E16-20		244 809	12	Intermediate slider with brake E10-12	237 324
	1a	Cover rail	211 358	13	Selection jack E10-12	200 688
	1b	Cover rail	209 223	14	Selector spring E10-12	200 691
	1c	Cover rail	209 224	500	Cap screw M4x10	023 136
	1d	Fixed wire	215 927	503	Hexagon nut M4	023 046
	1e	Bolt	208 094	504	Washer 4	020 870
	1f	Axle	211 349	505	Washer 4.3x7x0.5	022 153
	1g	Guide pin	211 351	507	Circlip 3.2	021 019
5	Cover on the right complete E16-20		221 115	508	Tension spring 4x0.55x18.9	023 392
6	Catch hook on the right E16-18		243 253	509	Compression spring 0.8x4x26.3	023 333
7	Slider E16-20		221 106	510	Ball DIN 5401 - 5	023 309
8	Tuck needle on the right E16-20		221 112	520*	Cap screw M6x20	244 824
9	Blade		210 422	521*	Washer 7.6x11.6x1.5	023 334

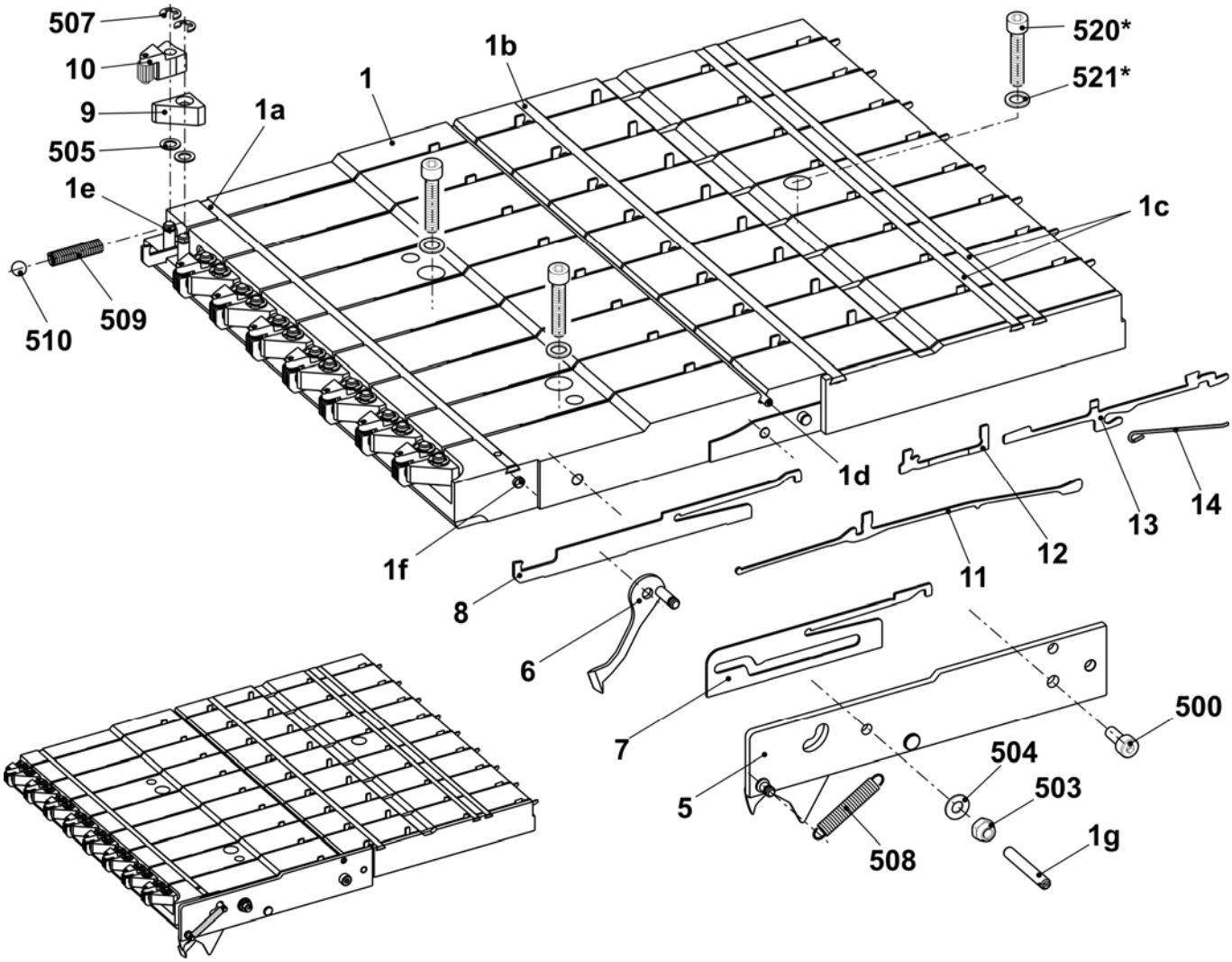

Cover on the left and on the right

Pos	*Designation*	*Ident No*		*Pos*	*Designation*	*Ident No*
1	Cover on the left	241 938		500	Countersunk screw M8x10	241 930
2	Cover on the right	241 939				

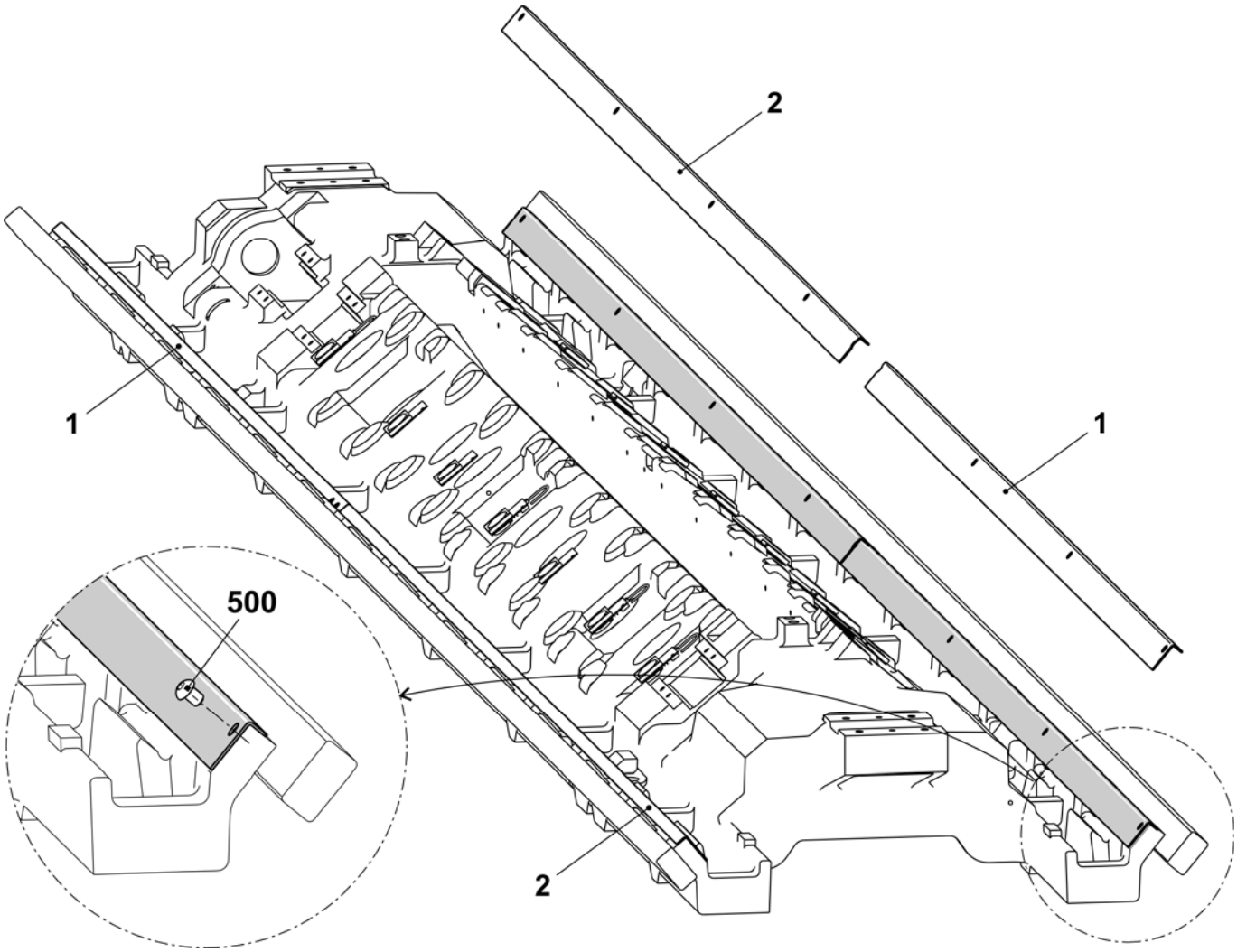

Tandem carriage

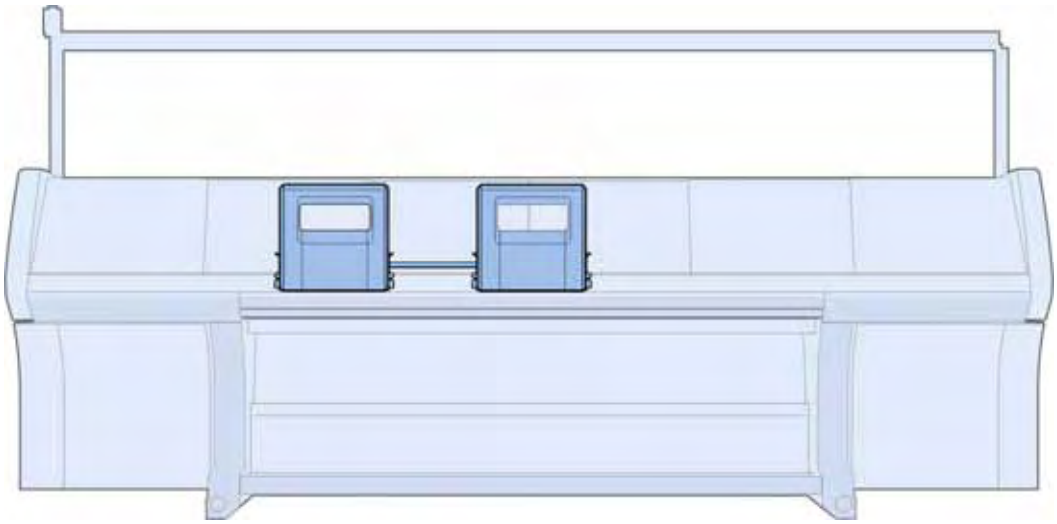

Overview of carriage

Pos	Designation	Ident No	Pos	Designation	Ident No
Σ	**Carriage complete**				
	E5 + E5m.4 + E2,5.2 k&w + E2,5.2 mg E3,5.2 k&w + E3,5.2 mg	**244 240**	2	Cam box set complete E5 + E5m.4 + E7m.5	244 239
	E5.2 k&w	**244 399**		E2,5.2 k&w + E2,5.2 mg	
	E5.2 mg	**244 397**		E3,5.2 k&w + E3,5.2 mg	
	E7 + E8 + E7m.8 + E8m.7	**244 387**		E5.2 k&w + E5.2 mg	
	E7m.5	**244 787**		E7 + E8 + E7m.8 + E8m.7	244 389
	E10	**244 378**		E10	244 382
	E10m.12	**244 394**		E10m.12	244 394
	E6.2 k&w	**244 401**		E6.2 k&w	244 403
	E6.2 mg	**242 272**		E6.2 mg	242 275
	E6.2(12m.10)	**244 284**		E6.2(12m.10)	244 286
	E12	**243 908**		E12	243 916
	E7.2 k&w	**242 270**		E7.2 k&w	242 274
	E7.2 mg	**243 912**		E7.2 mg	243 919
	E14	**244 380**		E14	244 384
	E16 + E18	**242 233**		E16 + E18	242 243
	E8.2 mg	**243 914**		E8.2 mg	243 920
3	YC driving outside complete	241 080	10	Wiper (felt)	241 411
4	YC driving in the middle complete	241 081	11	Bolt	212 392
5	Holding-down jack control complete		12	Bolt	243 171
8	Carriage assembly 822	242 232	13	Guide plate at the rear on the left	245 323
9	Selection system complete		14	Cover plate on the left	250 274
	E5 + E5m.4 + E7m.5 E2,5.2 k&w + E2,5.2 mg E3,5.2 k&w + E3,5.2 mg E5.2 k&w + E5.2 mg E7 + E8 + E7m.8 + E8m.7	216 218	15	Cover plate on the right	250 275
			19	Guide plate at the rear on the right	245 324
			21	Motor unit 550	239 407
			21a	Gear rack at the top	209 781
			21b	Gear rack in the middle	209 782
	E10 + E12 + E10m.12 + E6.2 (12m.10) E6.2 k&w + E6.2 mg	216 219	21c	Gear rack at the bottom	209 783
			521	Screw M4x12	023 367
	E14 + E7.2 k&w + E7.2 mg	229 300	22	Distributor at the rear on the left 822 OKC	242 239
	E16 + E18 + E8.2 mg	220 114	23	Distributor at the front on the left 822 OKC	242 240

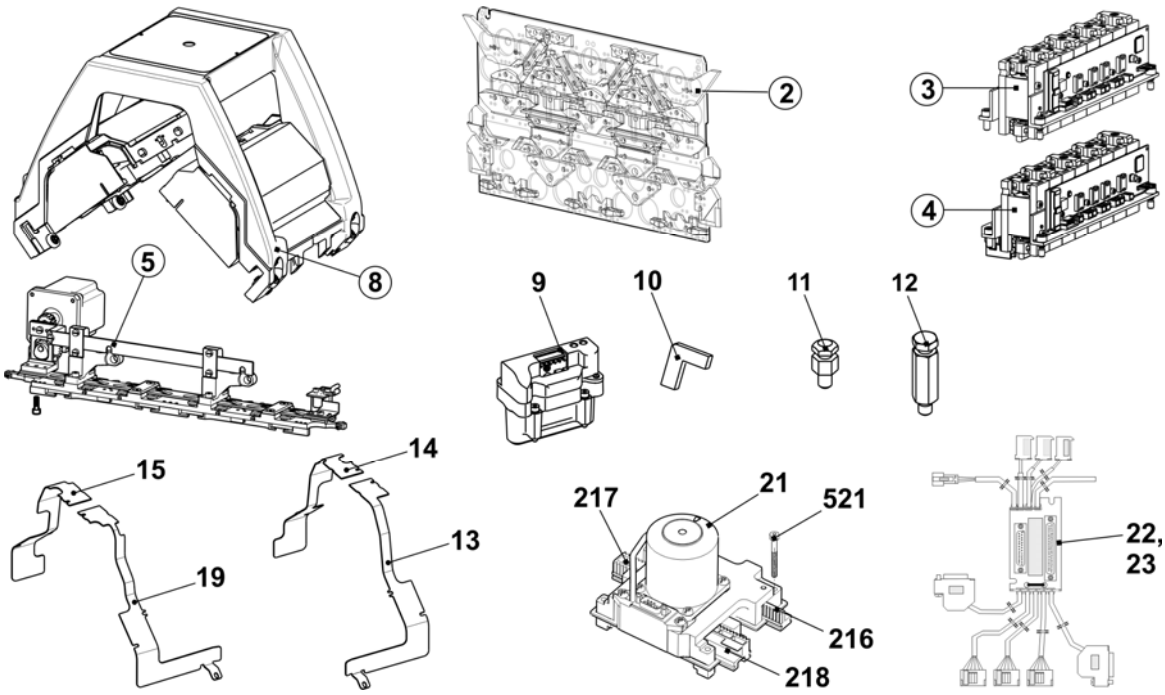

Carriage assembly

Pos	Designation	Ident No	Pos	Designation	Ident No
Σ	**Carriage assembly 822**	**242 232**			
1	Carriage frame, 2 cam boxes	240 704	13	Fixing bolt linking spot	244 179
2	Carriage part, 2 cam boxes	241 756	500	Cap screw M8X30	020 143
3	Carriage cover at the top, 2 cam boxes	250 928	502	Countersunk screw M6x10	023 183
5	Shoulder screw	211 750	503	Circlip 5	021 021
4	Shim	225 312	515	Threaded bushing	041 863
8	Bush	207 546	522	Shim 0.2x10x70	023 699
9	Bush	209 275	523	Shim 0.1x10x70	023 698
10	Bush	209 274	524	Shim 0.05x10x70	023 697

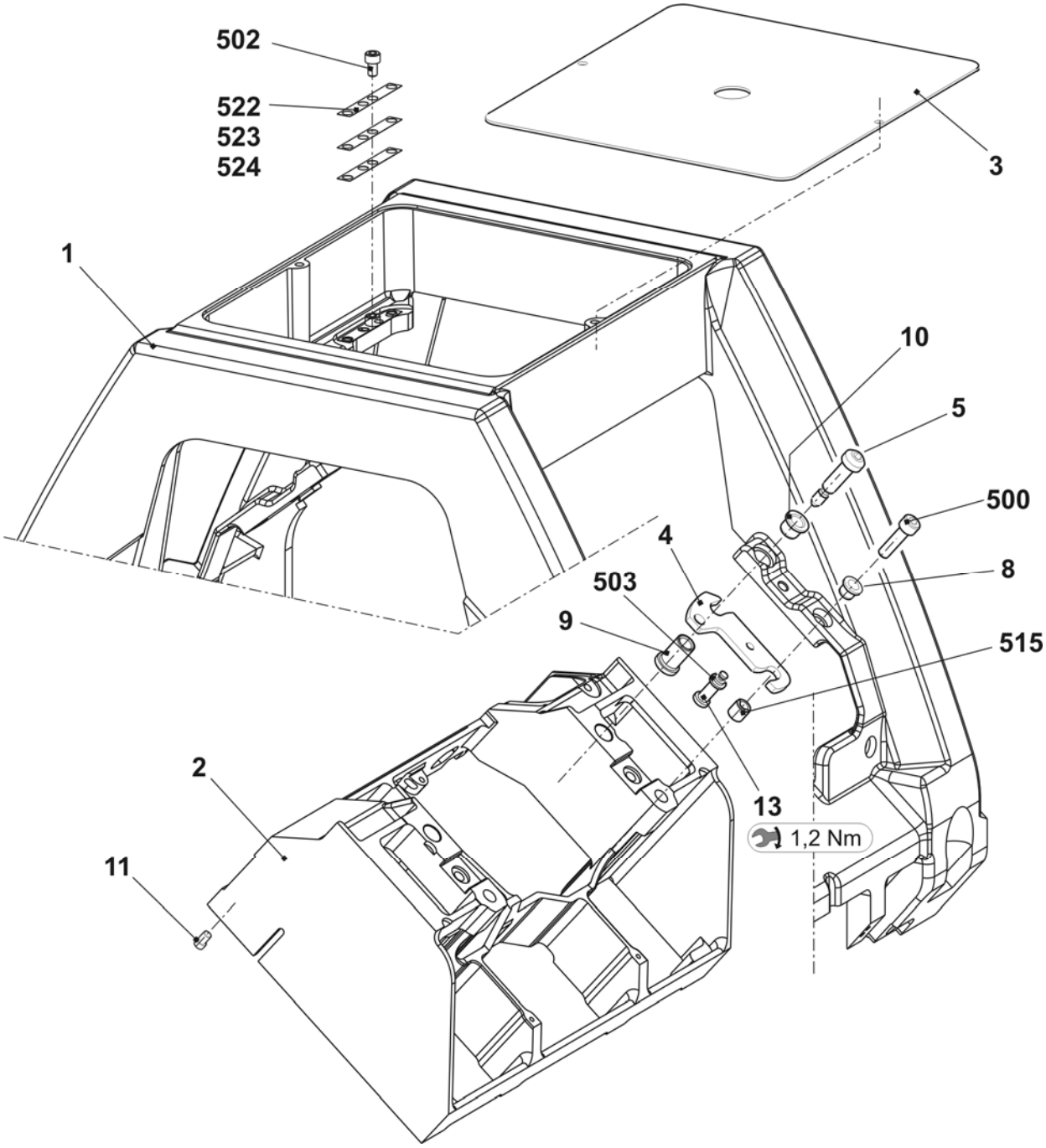

Carriage guide

Pos	Designation	Ident No		Pos	Designation	Ident No
6	Bearing bolt eccentric 0.3	242 060		510	Shim ring 12x18x1	023 315
7	Bearing bolt eccentric 0.3	242 624		511	Adjusting washer 10x16x1	023 260
12	Bolt complete with bearing	244 283		518	Ball bearing 62201-2RS	241 408
508	Nut M10	023 316		519	Ball bearing 62300-2RS1	242 070

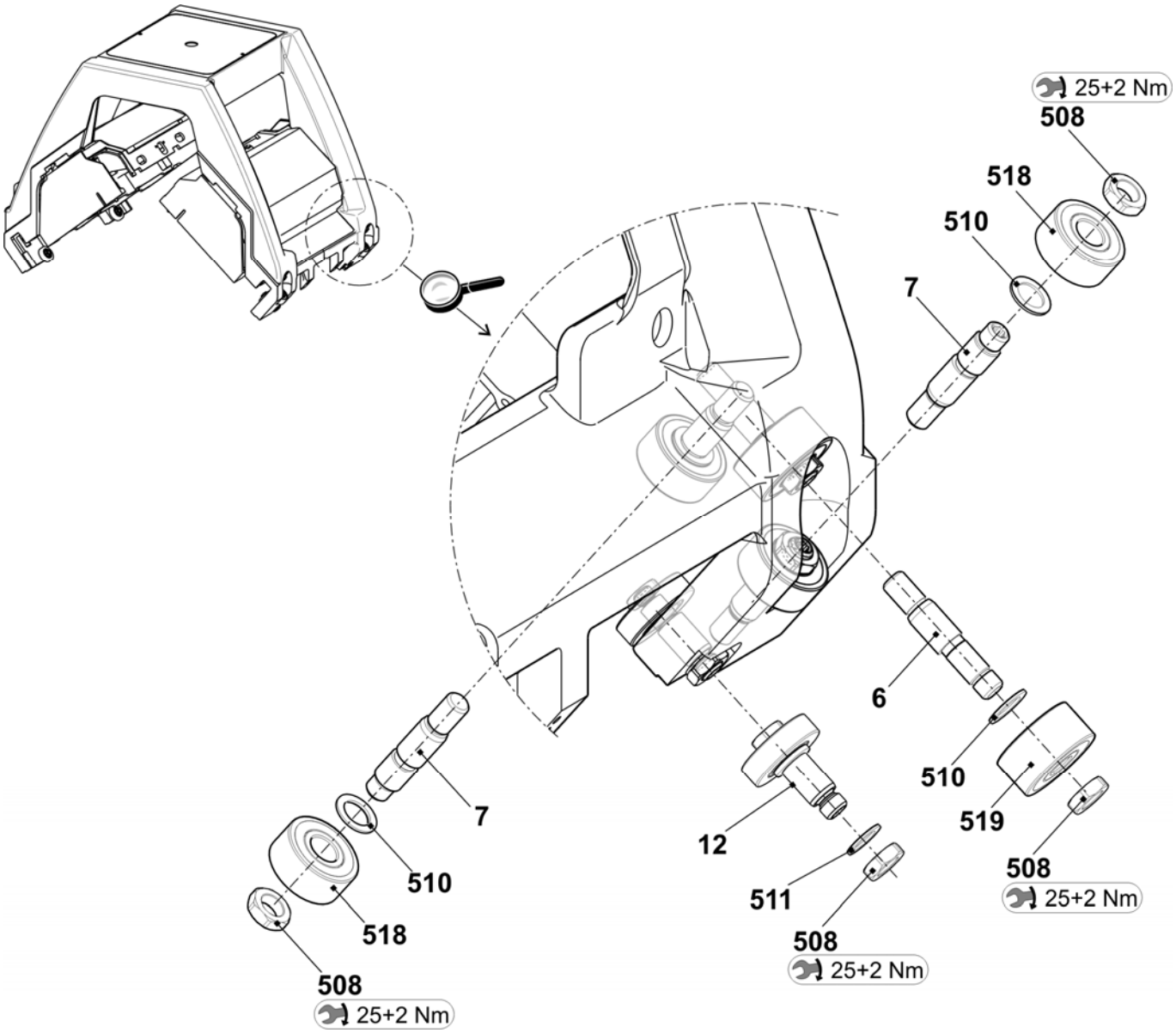

Spare parts package carriage guide bar

Pos	Designation	Ident No	Pos	Designation	Ident No
Σ	**Spare parts package carriage guide bar 84"**	**252 993**	501	Shim 0.05x22x42	243 291
1	Carriage guide bar	242 486	502	Shim 0.10x22x42	243 292
2	Adjusting eccentric	241 219	503	Shim 0.20x22x42	243 293
500	Shim 0.03x22x42	243 289	510*	Cap screw M8X20	020 141

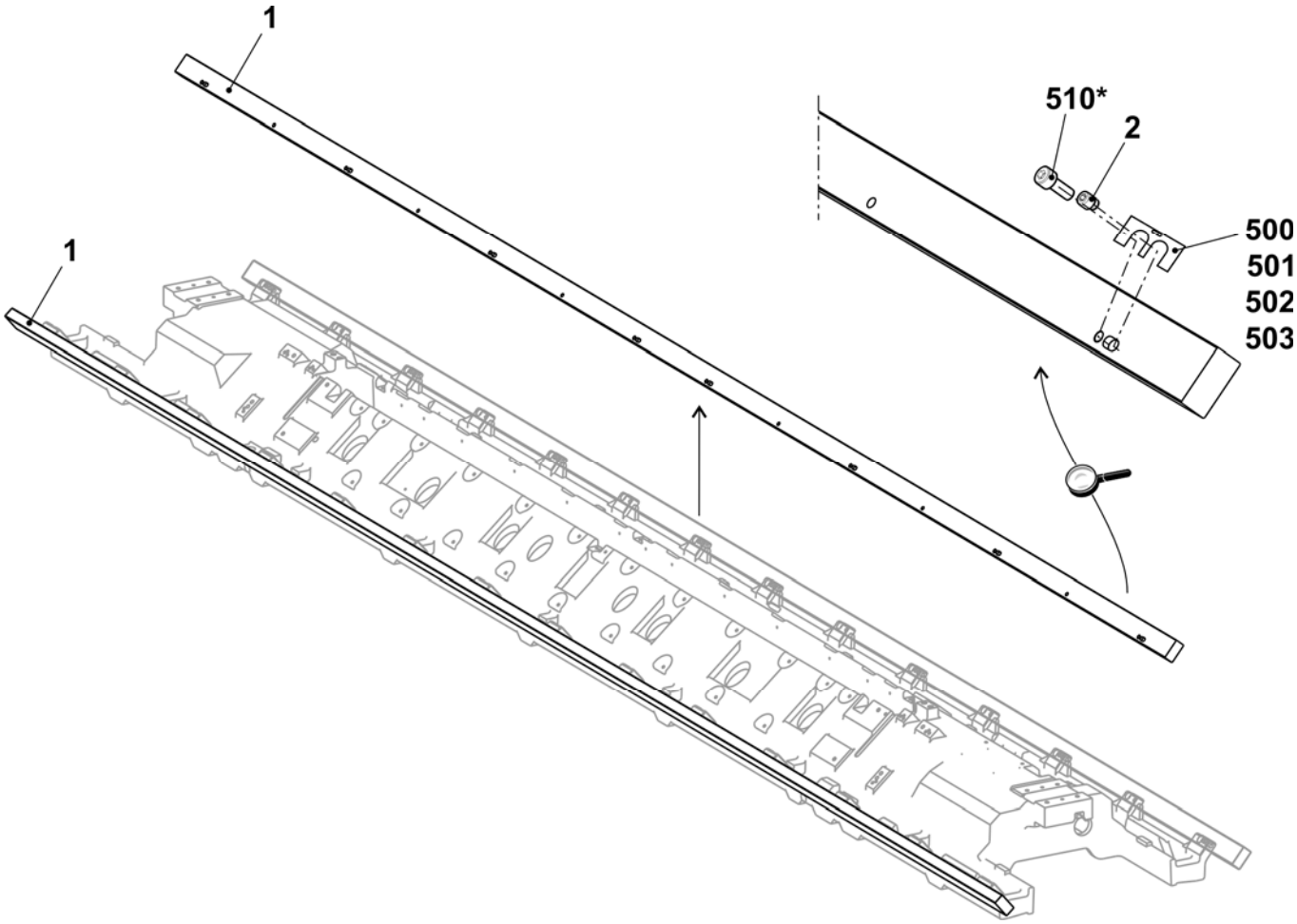

Carriage cover

Pos	Designation	Ident No		Pos	Designation	Ident No
2	Carriage cover at the front 2 cam boxes	251 207		501	Serrated lock washer 6.4	022 385
3	Carriage cover at the rear 2 cam boxes	251 208		502	Hexagon nut M6	022 899
13	Fixing bolt	242 382		505	O-ring	242 420

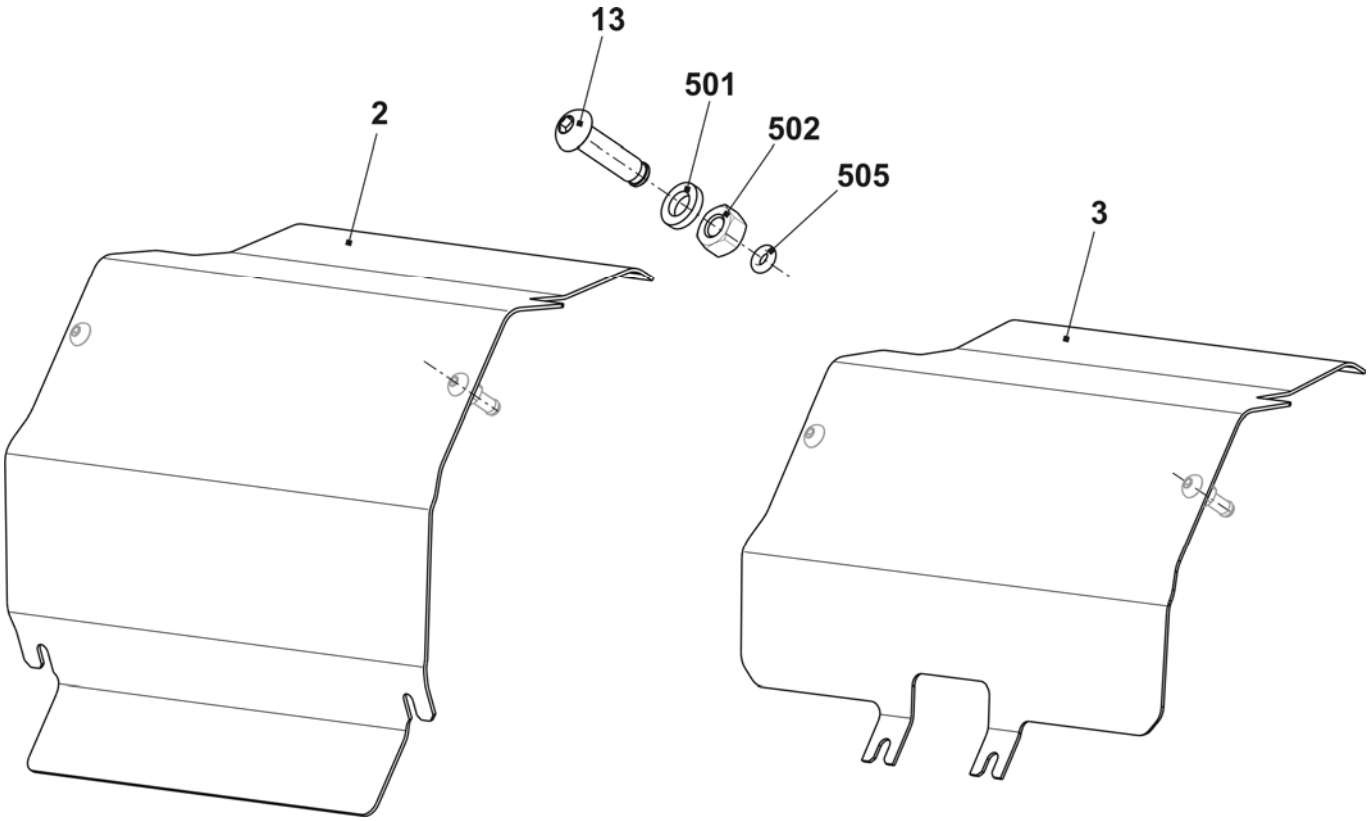

Carriage coupling

Pos	Designation	Ident No		Pos	Designation	Ident No
100	Coupling rod 42" and 44"	242 889		120	Sleeve	225 600
110	Connecting rod short	242 891		506	Cap screw M16x45	023 366

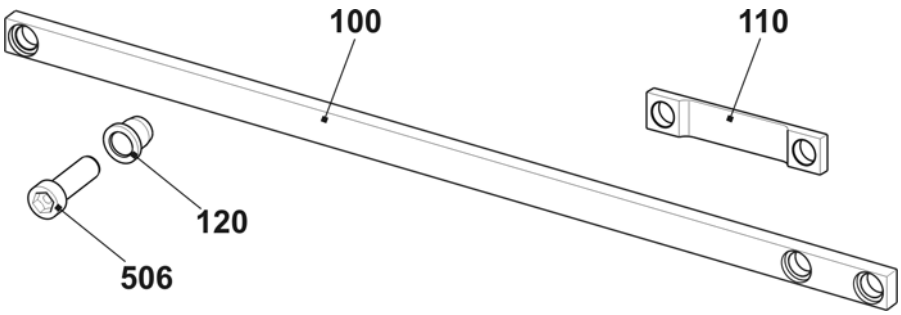

Brush holder

Pos	Designation	Ident No		Pos	Designation	Ident No
Σ	**Brush holder complete**			4	Brush	
	E5 + E5m.4 + E7 + E7m.5 + E7m.8 + E2,5.2 k&w + E2,5.2 mg + E3,5.2 k&w + E3,5.2 mg + E8 + E8m.7	**220 064**			E5 + E5m.4 + E7 + E7m.5 + E7m.8 + E2,5.2 k&w + E2,5.2 mg + E3,5.2 k&w + E3,5.2 mg + E8 + E8m.7	203 254
	E10 + E10m.12 + E5.2 k&w + E5.2 mg + E12 + E6.2 k&w + E6.2(12m.10) + E14 + E7.2 k&w + E7.2 mg	**220 065**			E10 + E10m.12 + E5.2 k&w + E5.2 mg + E12 + E6.2 k&w + E6.2(12m.10) + E14 + E7.2 k&w + E7.2 mg	212 854
	E16 + E8.2 mg + E18	**239 432**			E16 + E8.2 mg + E18	224 822
1	Brush holder	219 423		500	Countersunk screw M4x12	023 062
2	Brush clamp	213 010		501	Hexagon nut M8	020 856
3	Threaded rod	209 740		502	Adjusting washer	023 348
				503	Locking ring 5x0.6	023 347

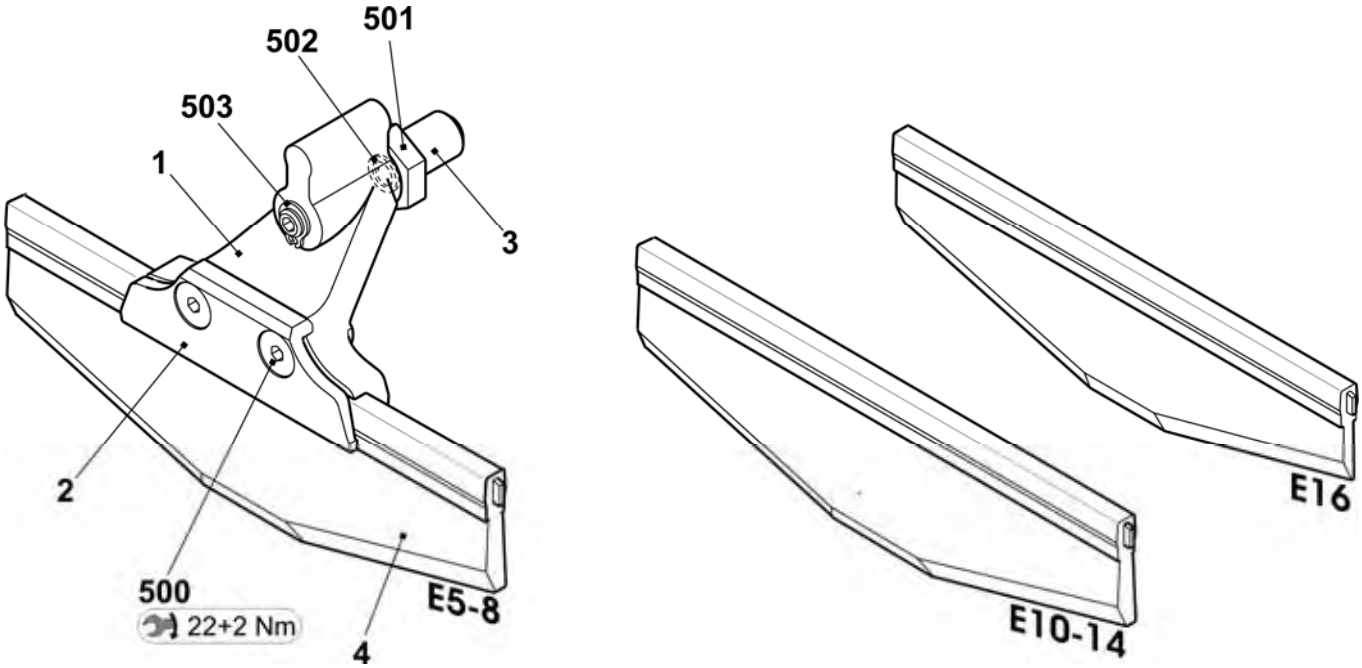

Yarn carrier driving without guiding part

Pos	Designation	Ident No	Pos	Designation	Ident No
Σ	**YC driving outside complete**	**241 080**			
1	Yarn carrier plunger complete	242 214	500	Cap screw M4x14-I-Torx	242 279
2	Support angle for jack	241 038	501	Cap screw M3x12-12.9	022 648
3	Card yarn carrier final stages OKC	300 960	900	Cap screw M6X14	022 658
4	Support angle for YC driving	242 903	901	Shoulder screw	231 899

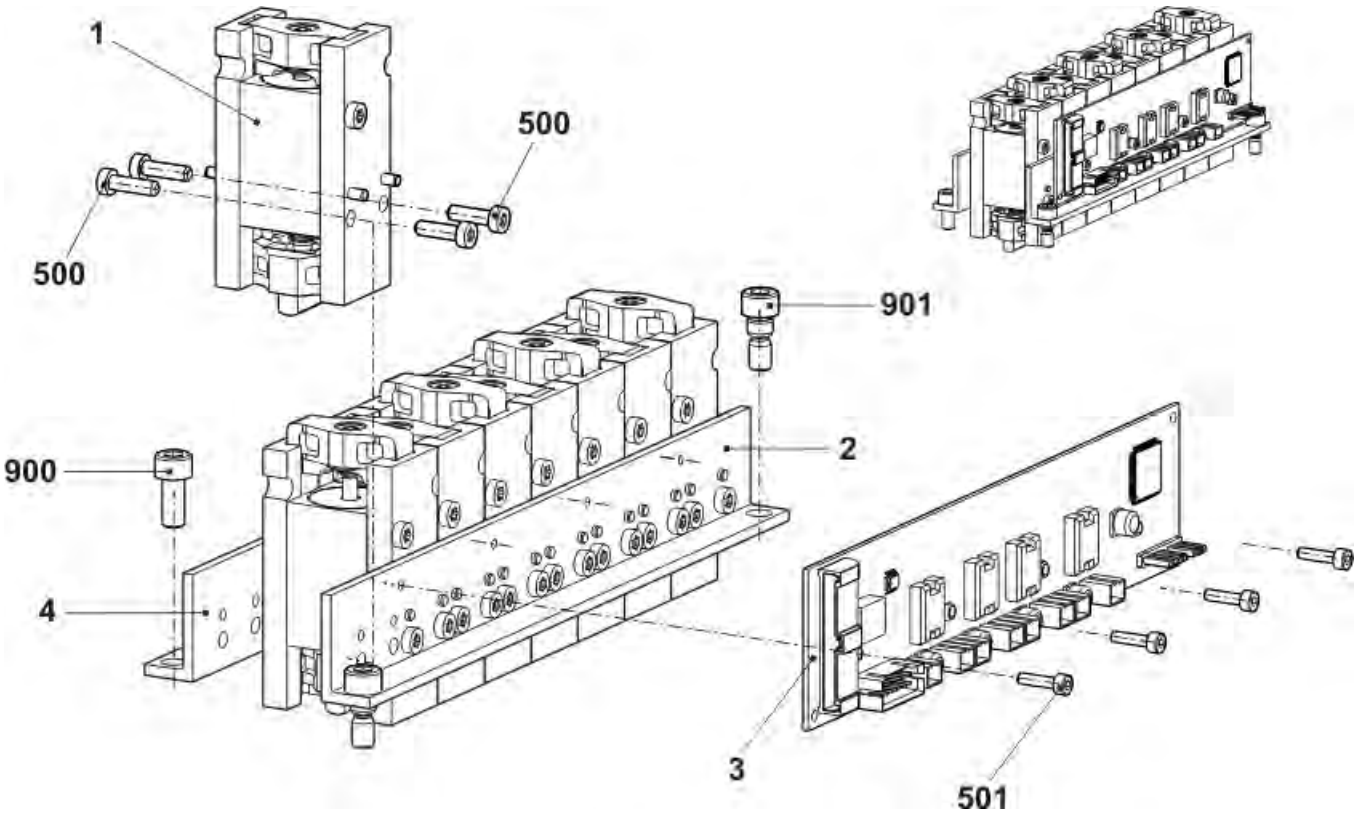

Yarn carrier driving with guiding part

Pos	*Designation*	*Ident No*		*Pos*	*Designation*	*Ident No*
Σ	**YC driving in the middle complete**	**241 081**				
1	Yarn carrier plunger complete	242 214		500	Cap screw M4x14-I-Torx	242 279
2	Support angle for jack	241 038		501	Cap screw M3x12-12.9	022 648
3	Support angle for YC driving	242 903		502	Screw KB60X20	243 625
4	Card yarn carrier final stages OKC	300 960		900	Cap screw M6X14	022 658
5	Guiding part	239 972		901	Shoulder screw	231 899

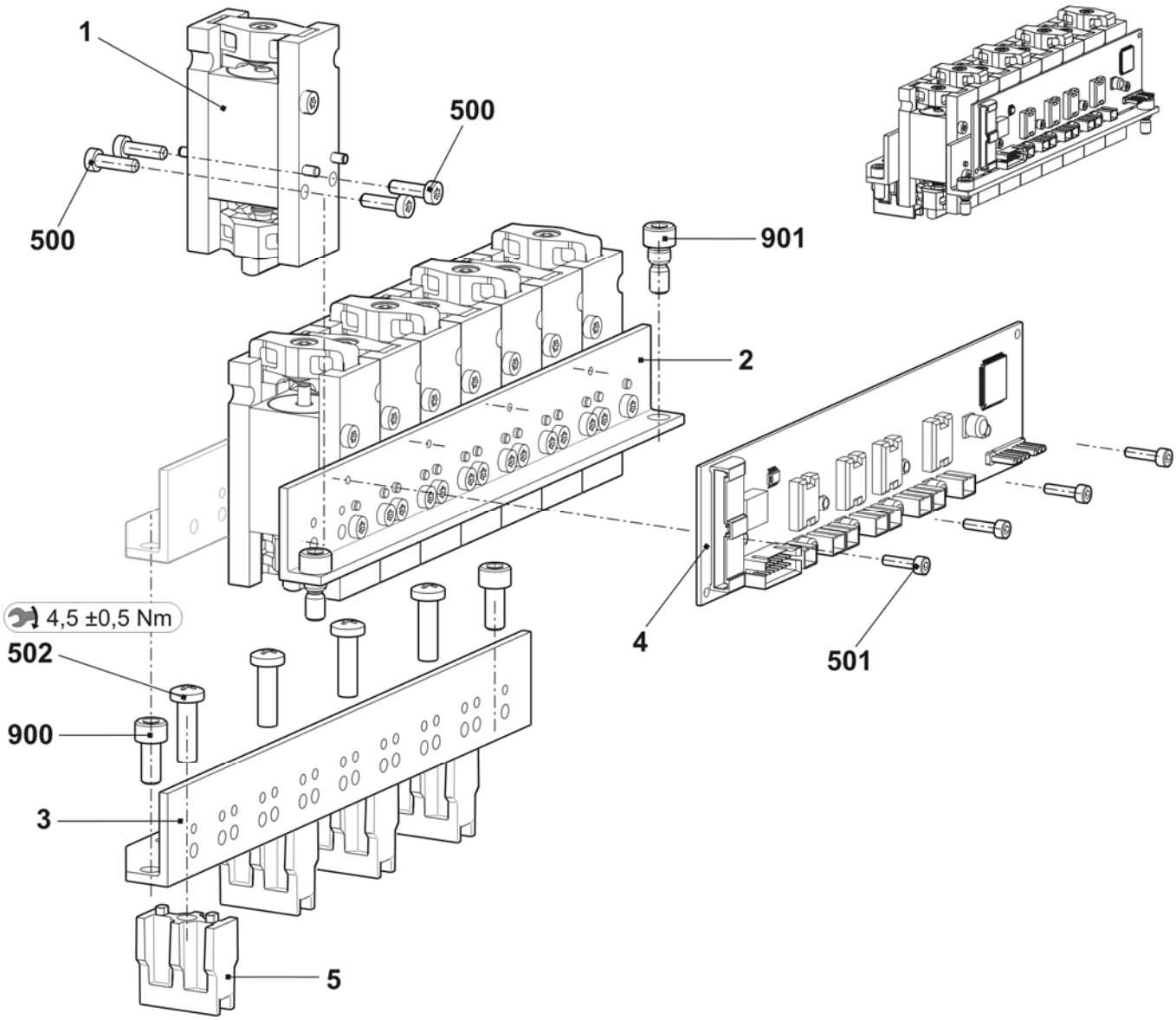

Holding-down jack control

Pos	Designation	Ident No	Pos	Designation	Ident No
Σ	**Holding-down jack control complete**		3	Jack cam box	
	E5 + E5m.4 + E7m.5 + E2,5.2 k&w + E3,5.2 k&w+ E5.2 mg	**239 993**		E5 + E5m.4 + E7m.5 + E2,5.2 k&w + E3,5.2 k&w+ E5.2 mg	239 975
	E7 + E8 + E7m.8 + E8m.7 + E3,5.2 mg	**239 992**		E7 + E8 + E7m.8 + E8m.7 + E3,5.2 mg	239 974
	E10 + E10m.12	**239 550**		E10 + E10m.12	239 537
	E5.2 k&w + E6.2 k&w	**239 846**		E5.2 k&w + E6.2 k&w	239 833
	E12 + E14+ E6.2 (12m.10) + E6.2 mg	**239 551**		E12 + E14+ E6.2 (12m.10) + E6.2 mg	239 538
	E7.2 k&w	**239 845**		E7.2 k&w	239 832
	E7.2 mg	**239 994**		E7.2 mg	239 976
	E16 + E18 + E8.2 mg	**239 426**		E16 + E18 + E8.2 mg	239 424
1	Control unit holding-down jack complete	239 342	500	Cap screw M4x6	020 019
2	Control slide complete	239 363	502	Cap screw M6x12	020 134
5	Cover plate	221 272	503	Cap screw M4x12	022 664
6	Support	239 354			

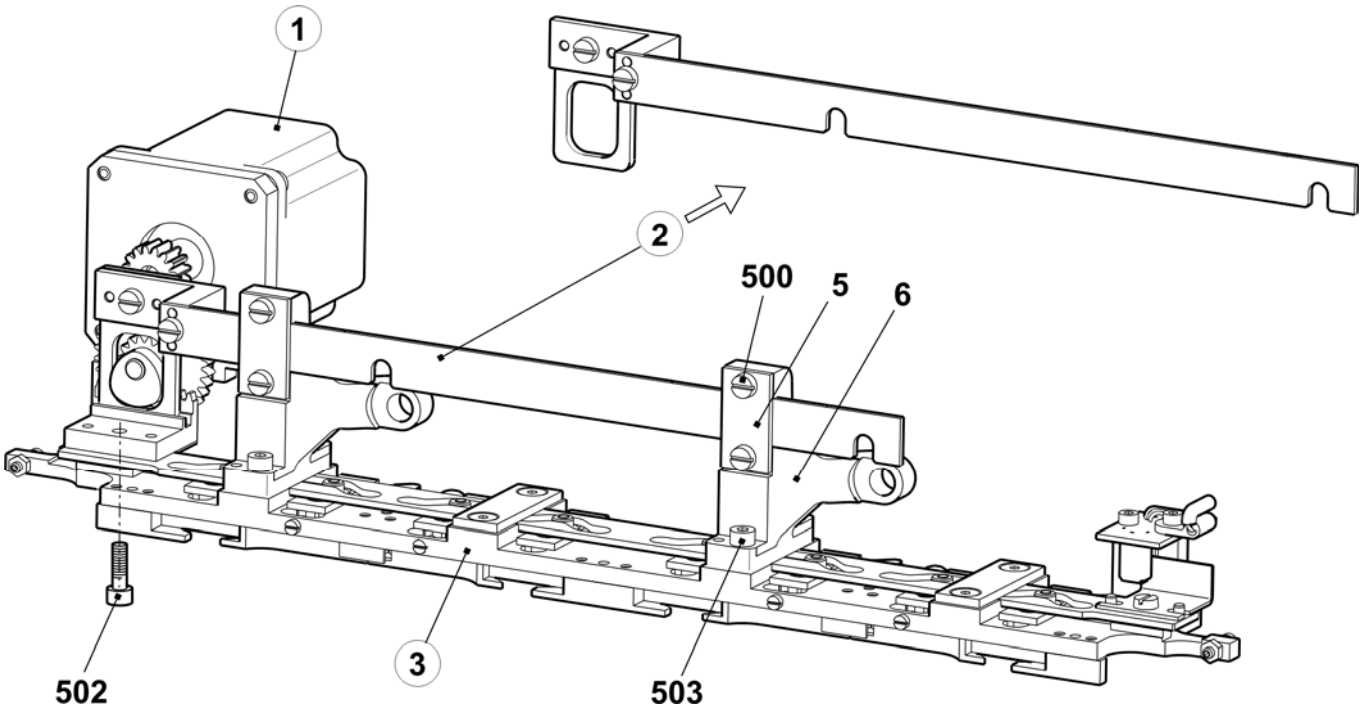

Control unit holding-down jack complete

Pos	Designation	Ident No		Pos	Designation	Ident No
1	Motor plate	239 336		501	Locking ring 6x0.7	023 298
2	Gear wheel complete	239 341		502	Washer 6.1x9x0.5	023 554
3	Motor complete	239 343		503	Ball bearing 6x10x3	023 533
500	Cap screw M4x12	022 664		504	Ball bearing 626-2RS	023 587

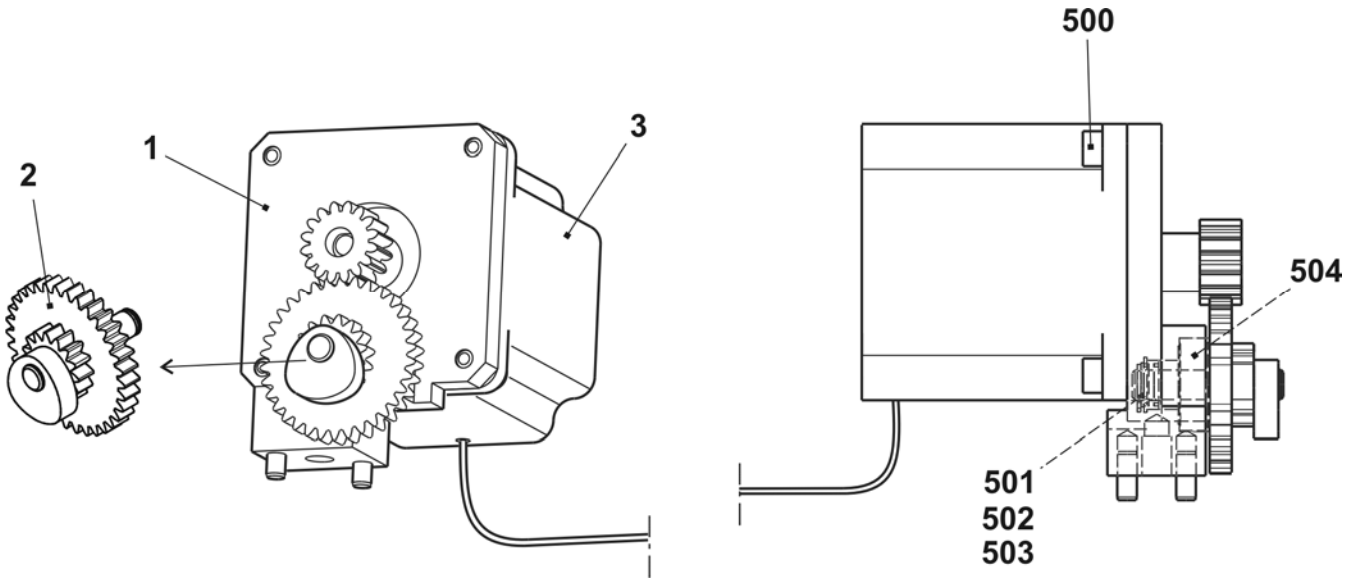

Jack cam E5 + E2,5.2

Pos	Designation	Ident No	Pos	Designation	Ident No
Σ	**Jack cam complete E5+2,5.2 E5m.4+E3,5.2kw+ E2,5.2kw+E2,5.2mg**	**239 975**			
			13	Covering plate	239 349
1	Jack cam box plate	240 161	14	Cap bush	225 855
2	Control slide complete E2,5.2-8	239 415	15	Guide plate	239 370
3	Floating cam on the left E5+2,5.2	239 945	16	Card photoelectric sensor NP V2	240 243
4	Floating cam on the right E5+2,5.2	239 946	17	Set screw	241 936
5	Jack slider on the left E5+2,5.2	239 943	500	Cap screw M3x6	020 005
6	Jack slider on the right E5+2,5.2	239 944	501	Cap screw M3x8	020 081
7	Entry cam on the left E5+2,5.2	239 947	502	Countersunk screw M3x6	020 286
8	Entry cam on the right E5+2,5.2	239 948	503	Countersunk screw M4x8	235 965
9	Central cam E5+2,5.2	239 949	504	Hexagon nut M5	020 854
10	Intermediate cam E5+2,5.2	239 950	505	Hexagon nut M4	022 536
11	Intermediate plate	239 423	506	Compression spring 0.4x4x16.6	239 811
12	Eccentric	239 344	508	Cap screw M3x6	022 589

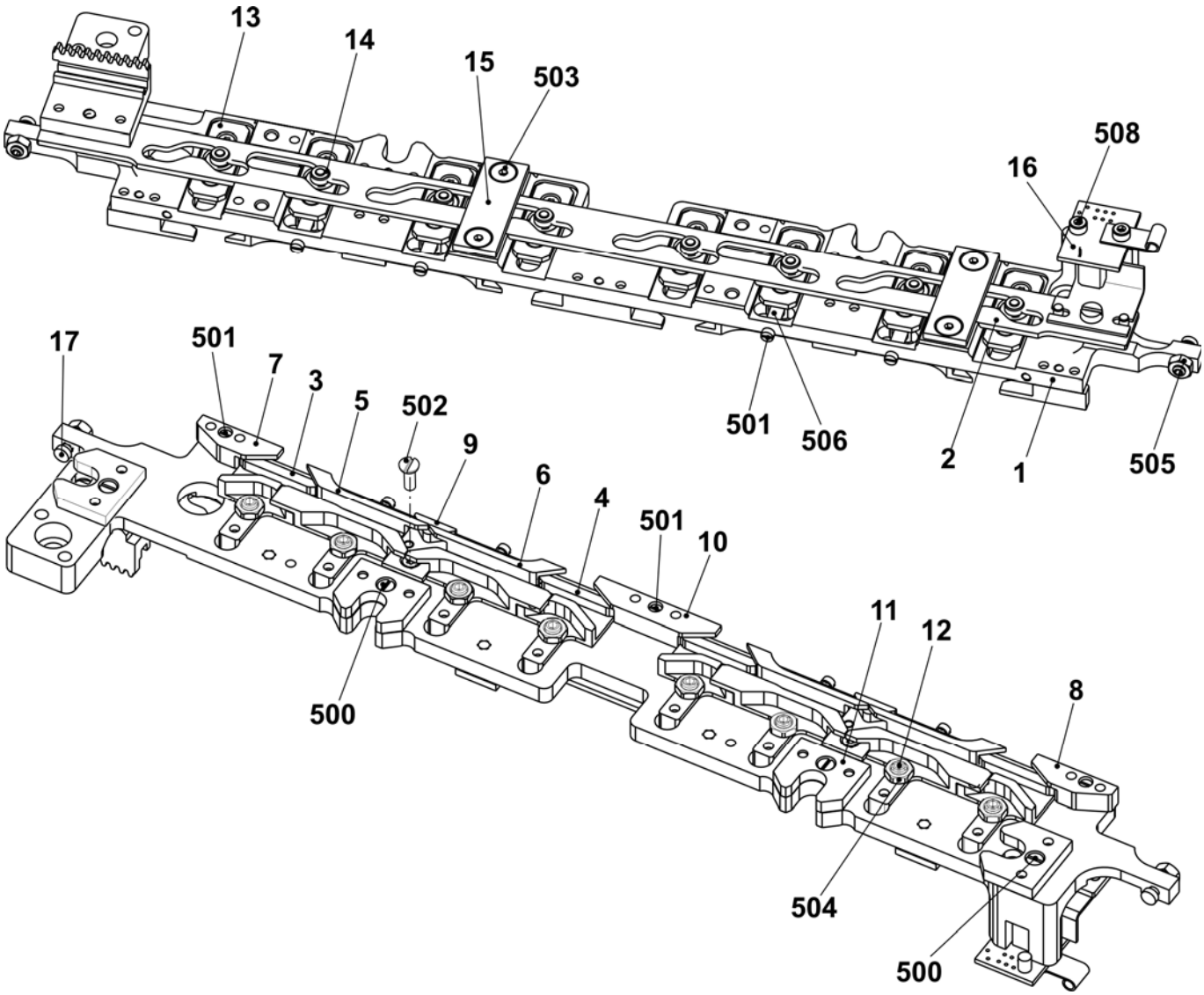

Jack cam E7-8+3,5.2

Pos	Designation	Ident No	Pos	Designation	Ident No
Σ	**Jack cam box complete E7-8 + E3,5.2 E7m.5+E7m.8+E8m.7+E3,5.2mg+E5.2mg**	**239 974**			
			13	Covering plate	239 349
1	Jack cam box plate	240 161	14	Cap bush	225 855
2	Control slide complete E2,5.2-8	239 415	15	Guide plate	239 370
3	Floating cam on the left E7-8 + E3,5.2	239 929	16	Card photoelectric sensor NP V2	240 243
4	Floating cam on the right E7-8 + E3,5.2	239 930	17	Set screw	241 936
5	Jack slider on the left E7-8 + E3,5.2	239 927	500	Cap screw M3x6	020 005
6	Jack slider on the right E7-8 + E3,5.2	239 928	501	Cap screw M3x8	020 081
7	Entry cam on the left E7-8 + E3,5.2	239 931	502	Countersunk screw M3x6	020 286
8	Entry cam on the right E7-8 + E3,5.2	239 932	503	Countersunk screw M4x8	235 965
9	Central cam E7-8 + E3,5.2	239 933	504	Hexagon nut M5	020 854
10	Intermediate cam E7-8 + E3,5.2	239 934	505	Hexagon nut M4	022 536
11	Intermediate plate	239 423	506	Compression spring 0.4x4x16.6	239 811
12	Eccentric	239 344	508	Cap screw M3x6	022 589

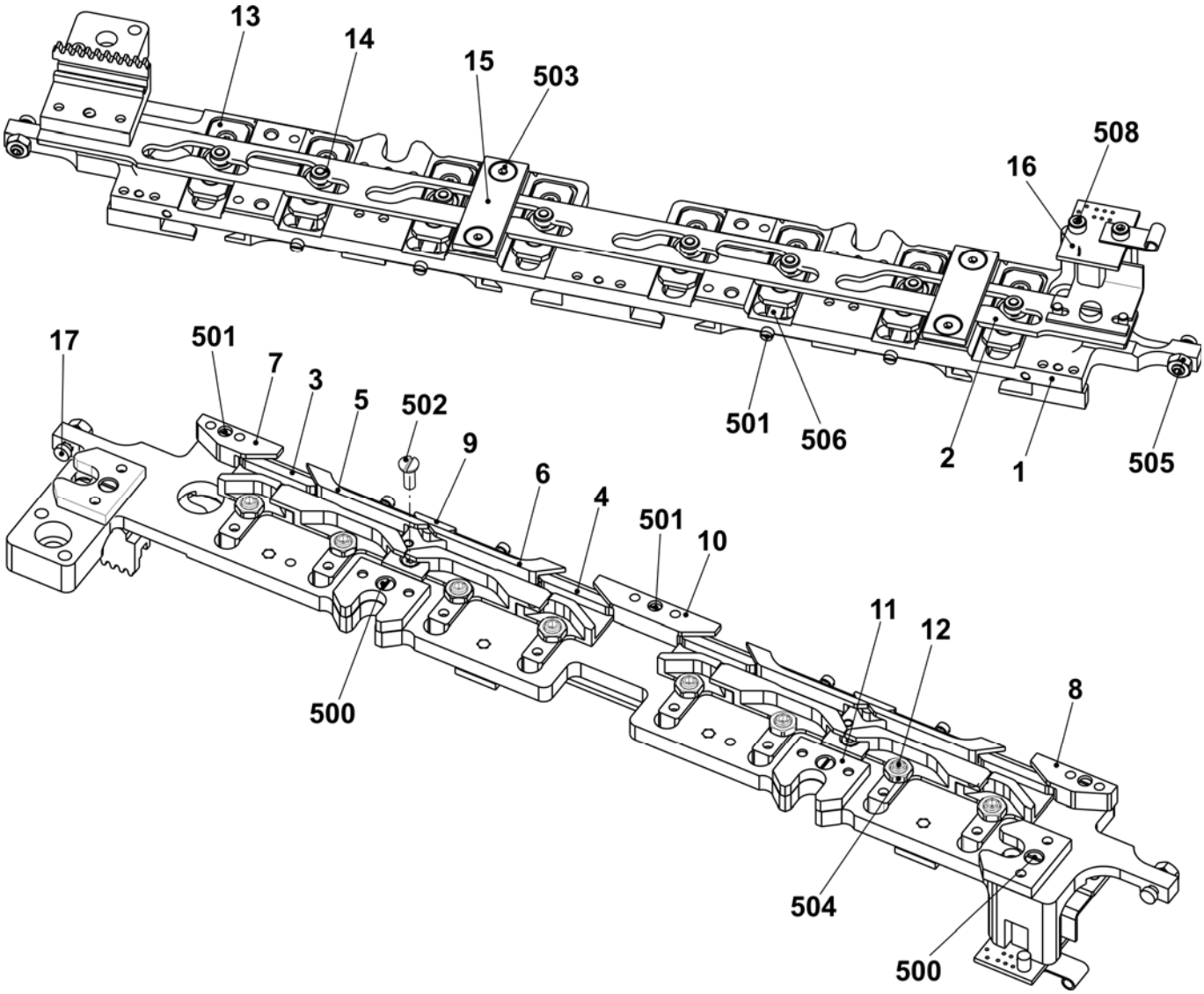

Jack cam box E10

Pos	Designation	Ident No	Pos	Designation	Ident No
Σ	**Jack cam box complete E10 + E10m.12**	**239 537**	13	Covering plate	239 349
1	Jack cam box plate	240 161	14	Cap bush	225 855
2	Control slide complete E10-14 + E16	239 421	15	Guide plate	239 370
3	Floating cam on the left E10	239 790	16	Card photoelectric sensor NP V2	240 243
4	Floating cam on the right E10	239 791	17	Set screw	241 936
5	Jack slider on the left E10	239 788	500	Cap screw M3x6	020 005
6	Jack slider on the right E10	239 789	501	Cap screw M3x8	020 081
7	Entry cam on the left E10 + E7.2	239 770	502	Countersunk screw M3x6	020 286
8	Entry cam on the right E10 + E7.2	239 771	503	Countersunk screw M4x8	235 965
9	Central cam E10 + E7.2	239 772	504	Hexagon nut M5	020 854
10	Intermediate cam E10 + E7.2	239 704	505	Hexagon nut M4	022 536
11	Intermediate plate	239 423	506	Compression spring 0.4x4x16.6	239 811
12	Eccentric	239 344	508	Cap screw M3x6	022 589

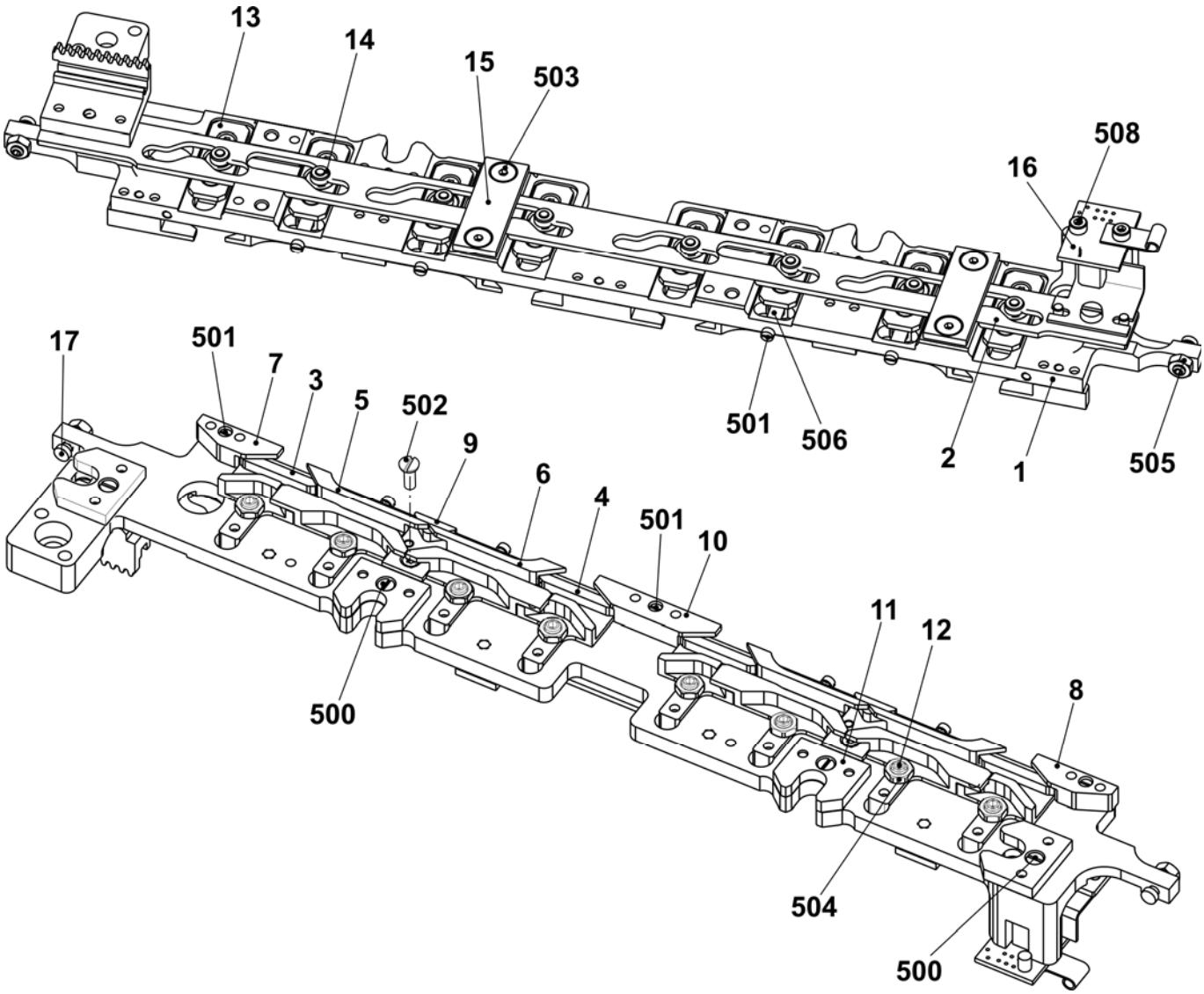

Jack cam box complete E12-14

Pos	Designation	Ident No	Pos	Designation	Ident No
Σ	**Jack cam box complete E12-14 E6.2 (12m.10) + E6.2 mg**	**239 538**			
			13	Covering plate	239 349
1	Jack cam box plate	240 161	14	Cap bush	225 855
2	Control slide complete E10-14+16	239 421	15	Guide plate	239 370
3	Floating cam on the left E12-14	239 465	16	Card photoelectric sensor NP V2	240 243
4	Floating cam on the right E12-14	239 466	17	Set screw	241 936
5	Jack slider on the left E12-14	239 474	500	Cap screw M3x6	020 005
6	Jack slider on the right E12-14	239 475	501	Cap screw M3x8	020 081
7	Entry cam on the left E10-14	239 459	502	Countersunk screw M3x6	020 286
8	Entry cam on the right E10-14	239 460	503	Countersunk screw M4x8	235 965
9	Central cam E10-14	239 463	504	Hexagon nut M5	020 854
10	Intermediate cam E12-14	239 423	505	Hexagon nut M4	022 536
11	Intermediate plate	239 423	506	Compression spring 0.4x4x16.6	239 811
12	Eccentric	239 344	508	Cap screw M3x6	022 589

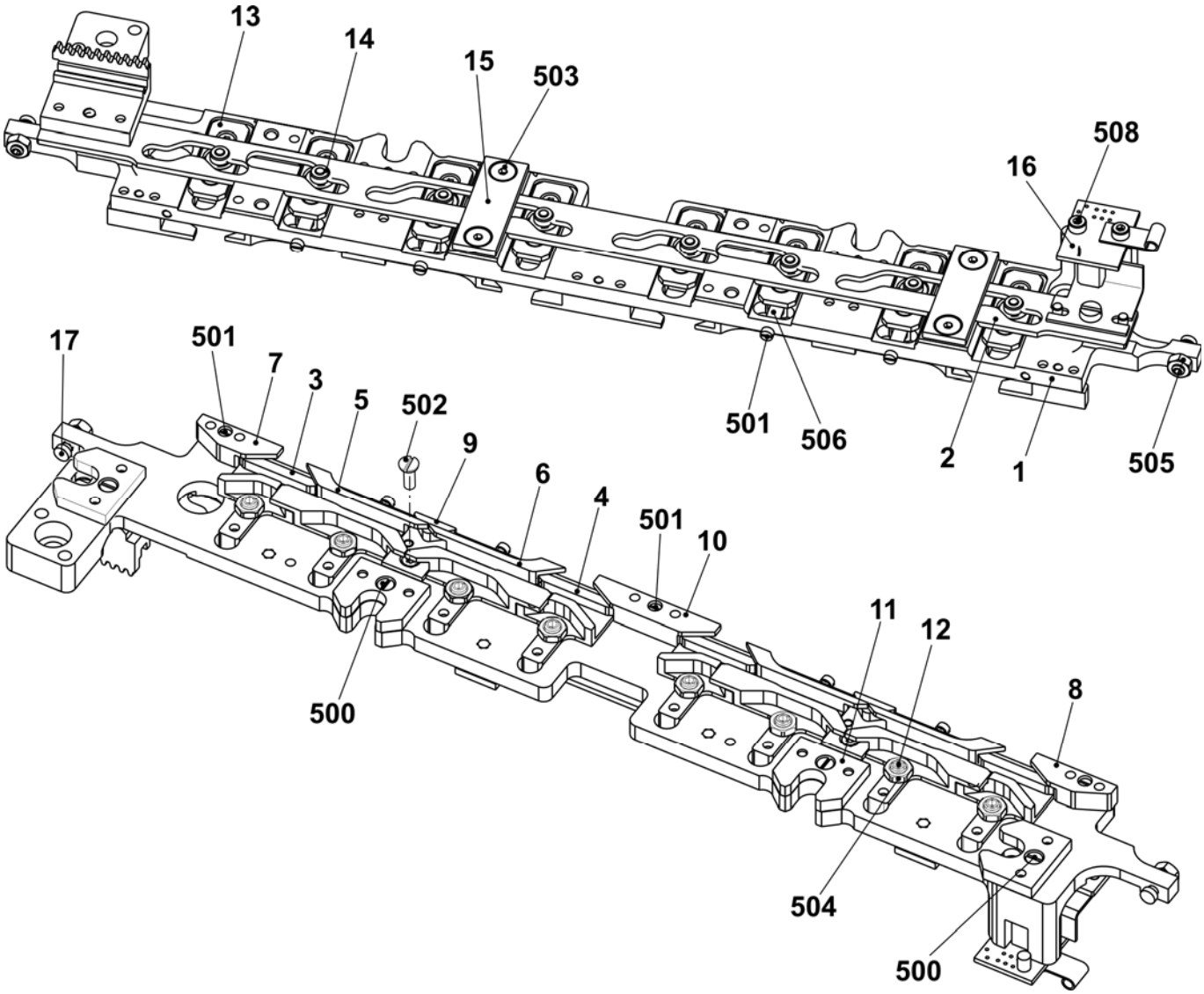

Jack cam box E16

Pos	Designation	Ident No	Pos	Designation	Ident No
Σ	**Jack cam box complete E16 + E18 + E8.2mg**	**239 424**	13	Covering plate	239 349
1	Jack cam box plate	240 161	14	Cap bush	225 855
2	Control slide complete E10-14+16	239 421	15	Guide plate	239 370
3	Floating cam on the left E16	239 690	16	Card photoelectric sensor NP V2	240 243
4	Floating cam on the right E16	239 691	17	Set screw	241 936
5	Jack slider on the left E16	239 688	500	Cap screw M3x6	020 005
6	Jack slider on the right E16	239 689	501	Cap screw M3x8	020 081
7	Entry cam on the left E16	239 693	502	Countersunk screw M3x6	020 286
8	Entry cam on the right E16	239 694	503	Countersunk screw M4x8	235 965
9	Central cam E16	239 696	504	Hexagon nut M5	020 854
10	Intermediate cam E16	239 695	505	Hexagon nut M4	022 536
11	Intermediate plate	239 423	506	Compression spring 0.4x4x16.6	239 811
12	Eccentric	239 344	508	Cap screw M3x6	022 589

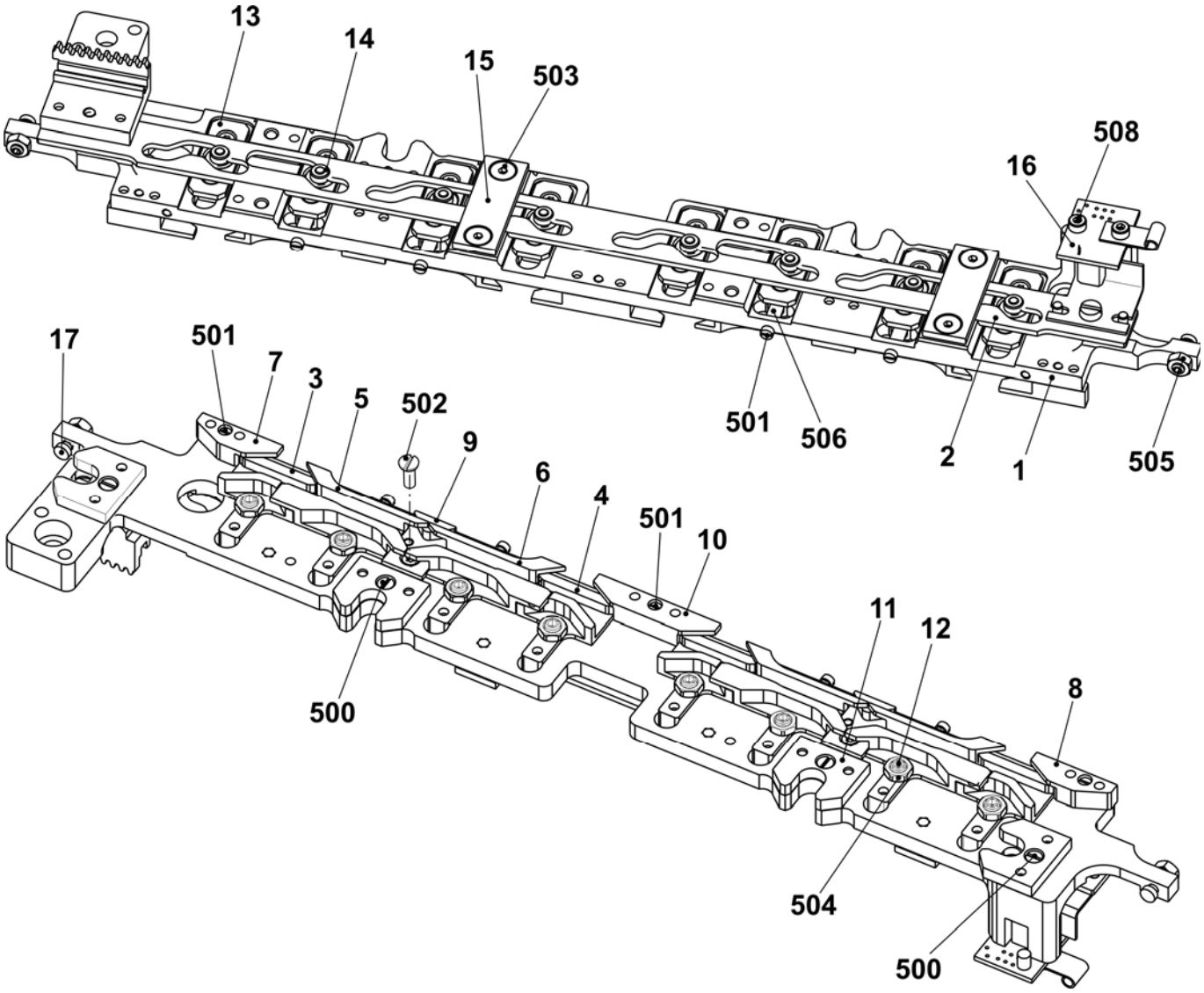

Jack cam box E5.2 k&w + E6.2 k&w

Pos	Designation	Ident No	Pos	Designation	Ident No
Σ	**Jack cam complete E5.2+6.2kw**	**239 833**	13	Covering plate	239 349
1	Jack cam box plate	240 161	14	Cap bush	225 855
2	Control slide complete E5.2-7.2	239 807	15	Guide plate	239 370
3	Floating cam on the left E5.2-6.2	239 802	16	Card photoelectric sensor NP V2	240 243
4	Floating cam on the right E5.2-6.2	239 803	17	Set screw	241 936
5	Jack slider on the left E5.2-6.2	239 800	500	Cap screw M3x6	020 005
6	Jack slider on the right E5.2-6.2	239 801	501	Cap screw M3x8	020 081
7	Entry cam on the left E5.2-6.2	239 797	502	Countersunk screw M3x6	020 286
8	Entry cam on the right E5.2-6.2	239 798	503	Countersunk screw M4x8	235 965
9	Central cam E5.2-6.2	239 796	504	Hexagon nut M5	020 854
10	Intermediate cam E5.2-6.2	239 795	505	Hexagon nut M4	022 536
11	Intermediate plate	239 423	506	Compression spring 0.4x4x16.6	239 811
12	Eccentric	239 344	508	Cap screw M3x6	022 589

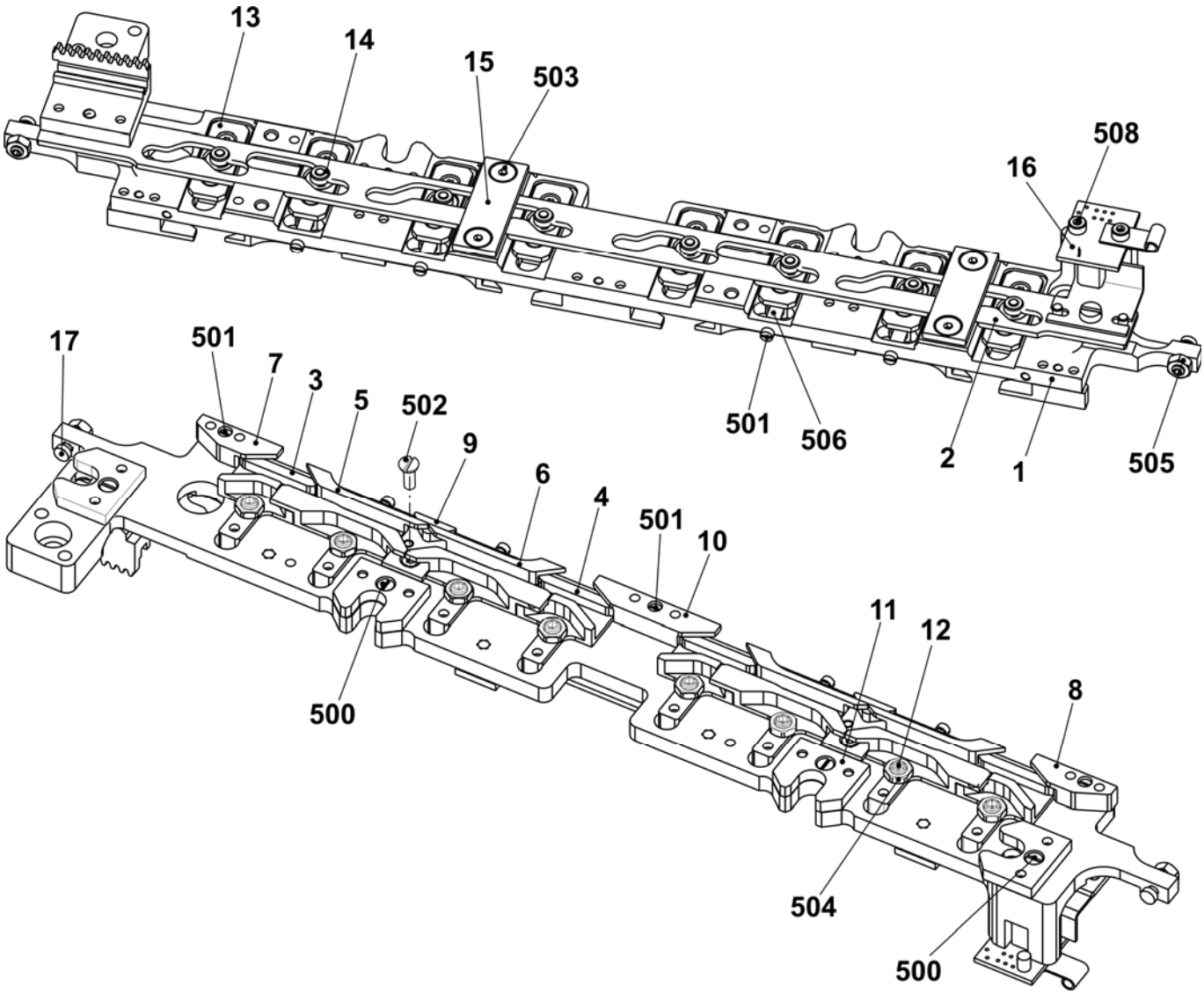

Jack cam box E7.2 kw

Pos	Designation	Ident No	Pos	Designation	Ident No
Σ	**Jack cam box complete E7.2 kw**	**239 832**	13	Covering plate	239 349
1	Jack cam box plate	240 161	14	Cap bush	225 855
2	Control slide complete E5.2-7.2	239 807	15	Guide plate	239 370
3	Floating cam on the left E7.2	239 768	16	Card photoelectric sensor NP V2	240 243
4	Floating cam on the right E7.2	239 769	17	Set screw	241 936
5	Jack slider on the left E7.2	239 766	500	Cap screw M3x6	020 005
6	Jack slider on the right E7.2	239 767	501	Cap screw M3x8	020 081
7	Entry cam on the left E10+7.2	239 770	502	Countersunk screw M3x6	020 286
8	Entry cam on the right E10+7.2	239 771	503	Countersunk screw M4x8	235 965
9	Central cam E10+7.2	239 772	504	Hexagon nut M5	020 854
10	Intermediate cam E10+7.2	239 704	505	Hexagon nut M4	022 536
11	Intermediate plate	239 423	506	Compression spring 0.4x4x16.6	239 811
12	Eccentric	239 344	508	Cap screw M3x6	022 589

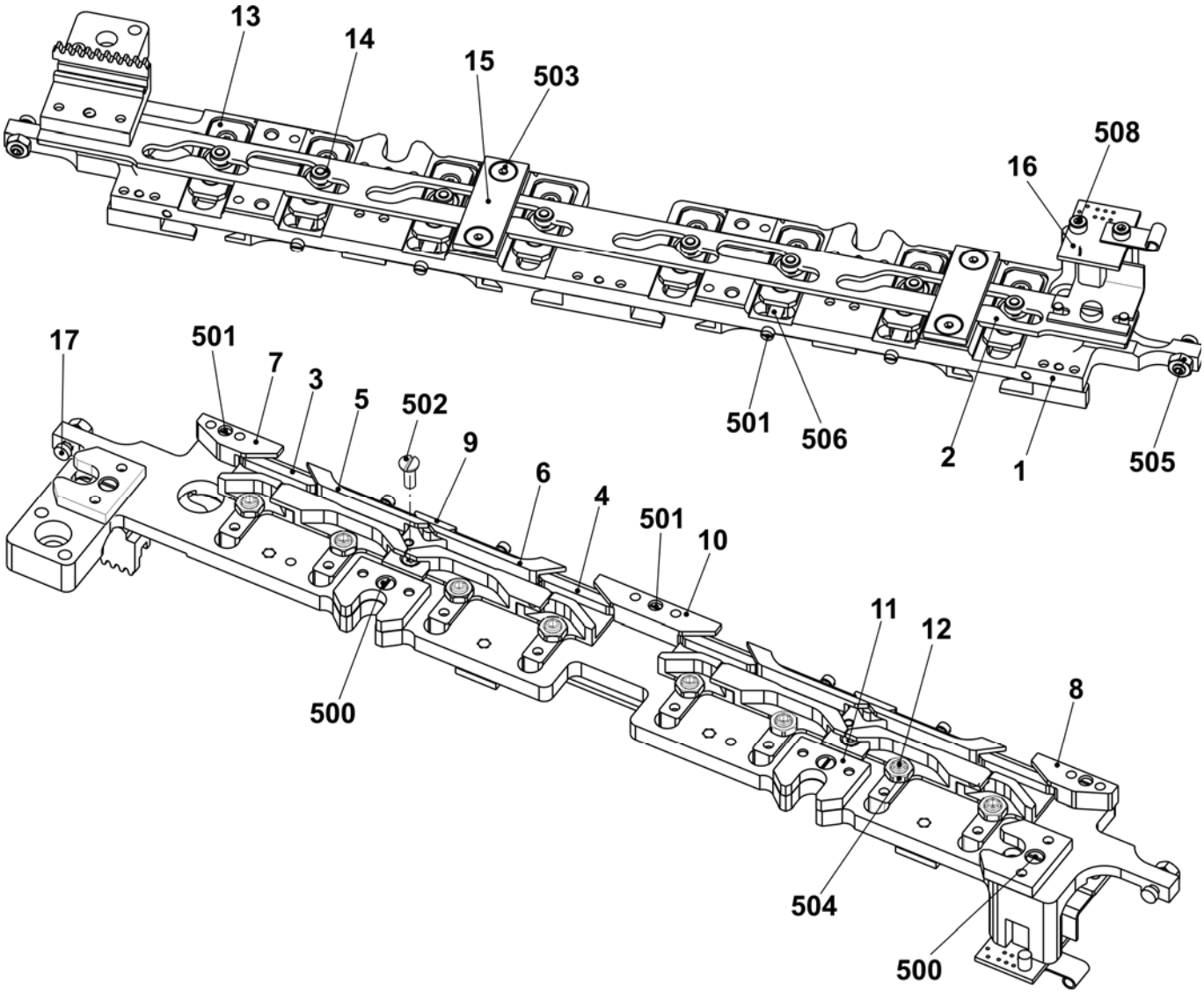

Jack cam box E7.2 mg

Pos	*Designation*	*Ident No*	*Pos*	*Designation*	*Ident No*
Σ	**Jack cam box complete E7.2 mg**	**239 976**	13	Covering plate	239 349
1	Jack cam box plate	240 161	14	Cap bush	225 855
2	Control slide complete E10-14+16	239 421	15	Guide plate	239 370
3	Floating cam on the left E7.2 MG	239 910	16	Card photoelectric sensor NP V2	240 243
4	Floating cam on the right E7.2 MG	239 911	17	Set screw	241 936
5	Jack slider on the left E7.2 MG	239 908	500	Cap screw M3x6	020 005
6	Jack slider on the right E7.2 MG	239 909	501	Cap screw M3x8	020 081
7	Entry cam on the left E7.2 MG	239 912	502	Countersunk screw M3x6	020 286
8	Entry cam on the right E7.2 MG	239 913	503	Countersunk screw M4x8	235 965
9	Central cam E7.2 MG	239 914	504	Hexagon nut M5	020 854
10	Intermediate cam E7.2 MG	239 915	505	Hexagon nut M4	022 536
11	Intermediate plate	239 423	506	Compression spring 0.4x4x16.6	239 811
12	Eccentric	239 344	508	Cap screw M3x6	022 589

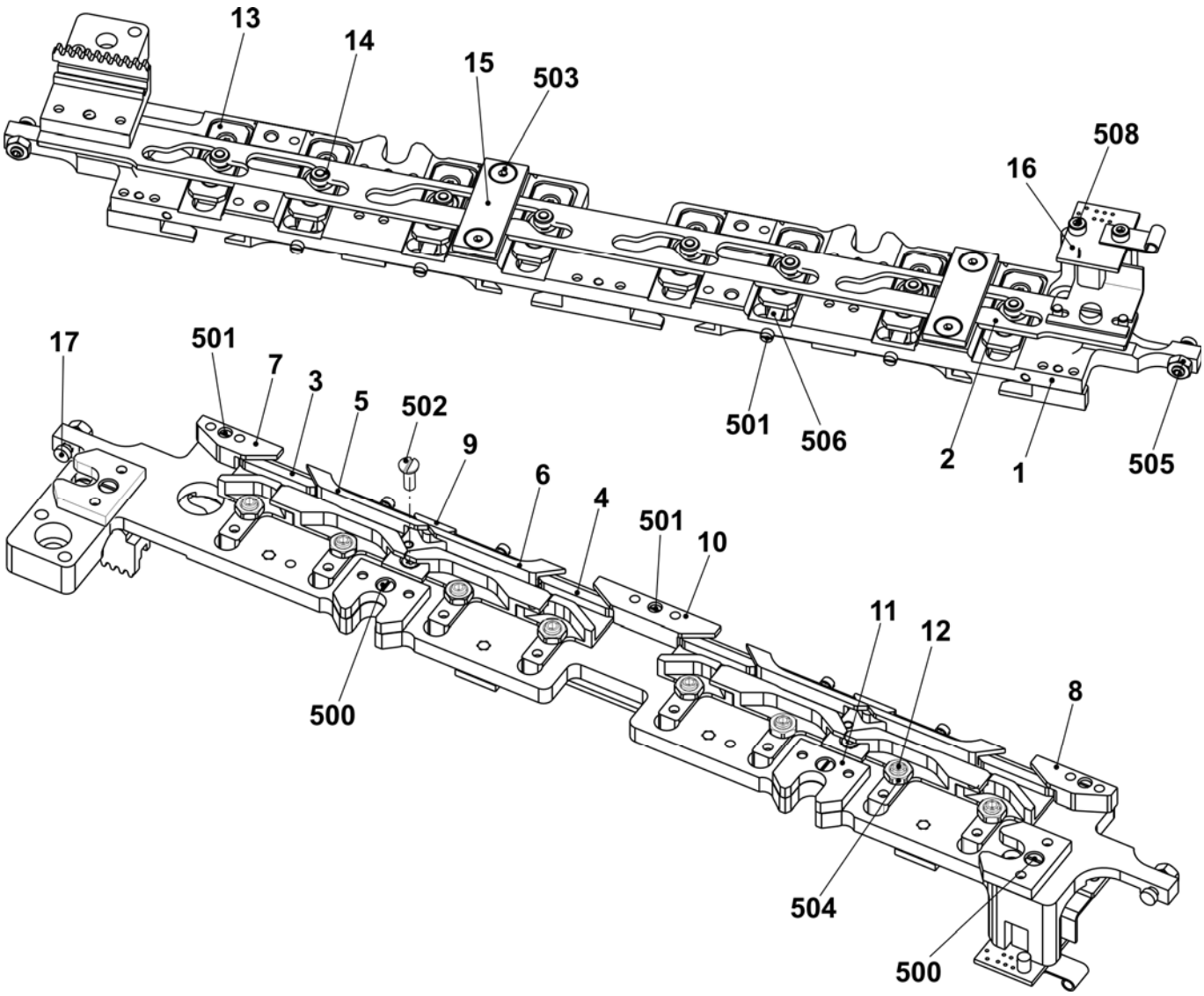

Needle detector

Pos	Designation	Ident No	Pos	Designation	Ident No
Σ	**Needle detector E5 - E14 E2,5.2 - E7.2 + E6.2(12m.10) E5m.4 + E7m.5 + E7m.8 + E8m.7 + E10m.12**	**239 444**	**Σ**	**Needle detector E16 + E18 + E8.2**	**239 369**
1	Support needle stop	239 405	1	Needle detector pre-assembled E16-18	238 929
2	Switching part	239 368	2	Switching part	239 368
3	Cable of needle detector complete	240 018	3	Cable of needle detector complete	240 018
4	Sensor pre-assembled	221 758	4	Sensor pre-assembled	239 324
500	Cap screw M2x8	022 954	500	Cap screw M2x8	022 954
501	Set screw M5x8	022 809	501	Set screw M5x8	022 809
502	Setting pin 4x16	020 660	502	Setting pin 4x16	020 660
503	Compression spring 4.3x0.45x10	021 398	503	Compression spring 4.3x0.45x10	021 398
504	Countersunk screw M4x6	023 427	504	Countersunk screw M4x6	023 427

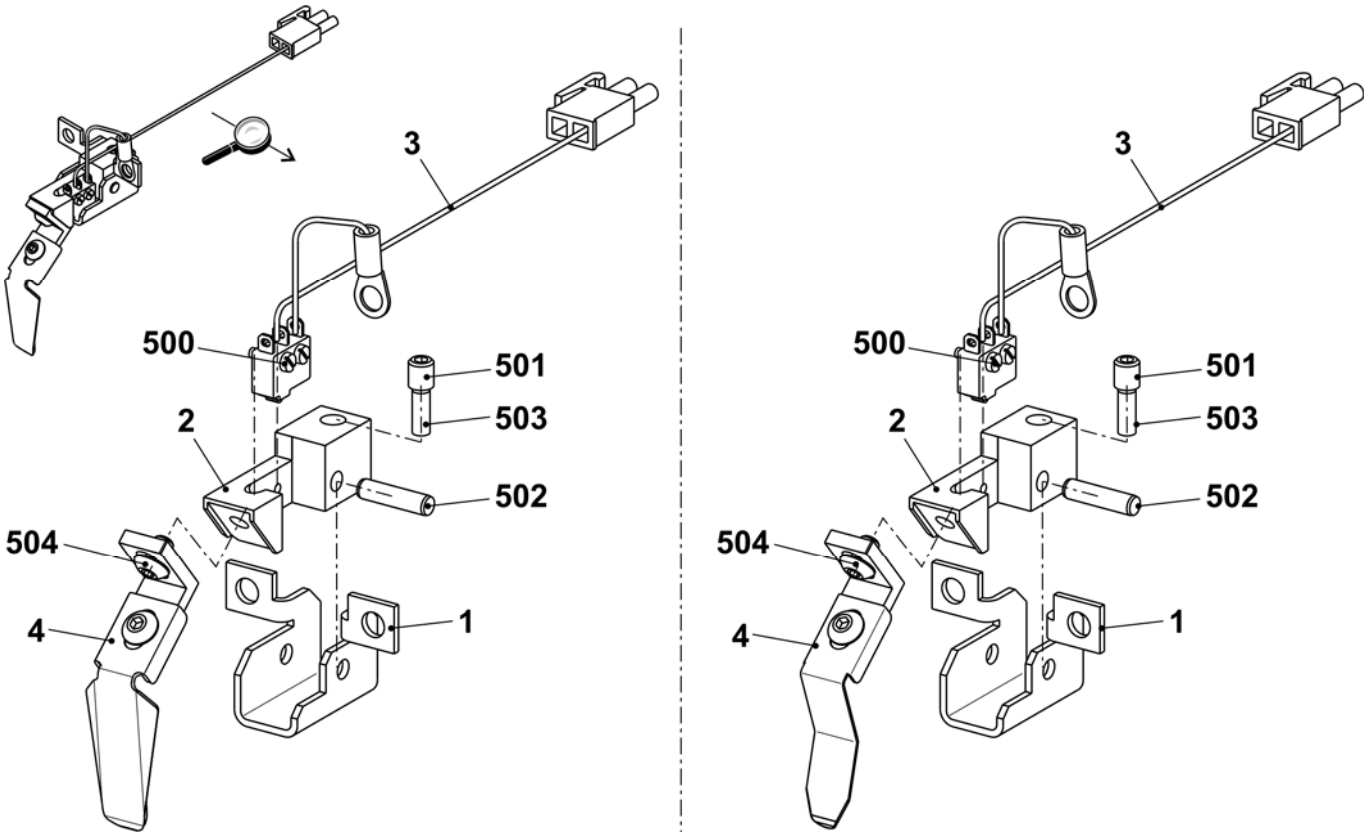

Yarn detector

Pos	Designation	Ident No
Σ 1	**Yarn detector complete**	**242 800**
1	Yarn detector	242 798
	1a Wire for yarn detector	250 847
2	Angle	242 992
3	Clamp	212 592
500	Set screw M5x6	023 391
Σ 2	**Yarn detector No. 2 complete**	**244 065**
1	Yarn detector	242 798
	1a Wire for yarn detector	250 847
2	Support for yarn detector	243 598
3	Clamp	212 592
500	Set screw M5x6	023 391

Pos	Designation	Ident No
30*	Covering bar short	242 911
31*	Covering bar long	242 927
32*	Shim	243 223
552*	Cap screw M3x6	023 671
553*	Cap screw M3x6-12.9	022 589

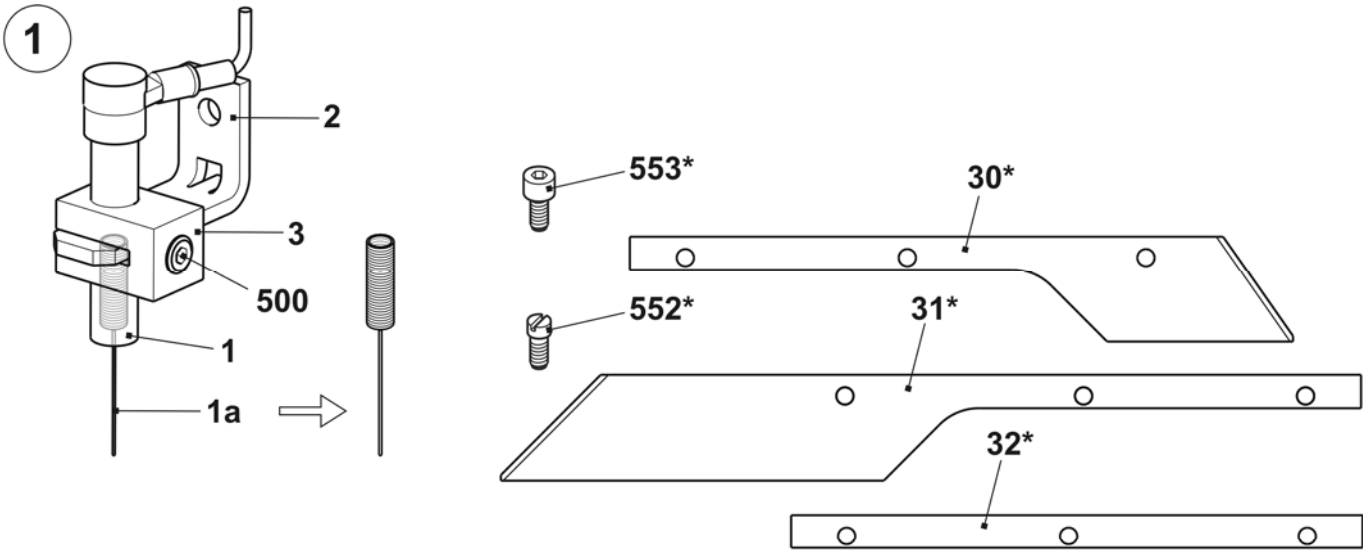

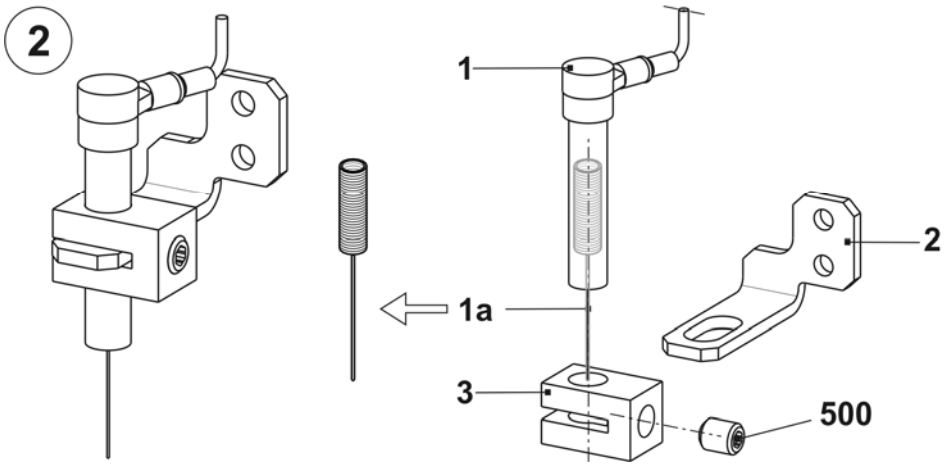

Cam box E5 + E5m.4 + E7m.5 + E2,5.2 k&w + E2,5.2 mg + E3,5.2 k&w + E3,5.2 mg + E5.2 k&w + E5.2 mg

Pos	Designation		Ident No	Pos	Designation	Ident No
Σ	**Cam box set complete E5**		**244 239**	42	Switching piece	240 281
1	Cam plate		241 760	58	Shoulder screw	239 626
37	Stitch forming cam on the right complete E5-10		211 163	505	Shim 0.03x12x75	022 828
38	Stitch forming cam on the left complete E5-10		211 164	506	Shim 0.05x12x75	022 829
39	Rod guide element on the left		211 165	507	Shim 0.1x12x75	022 830
40	Rod guide element in the middle		211 166	508	Shim 0.2x12x75	022 831
41	Rod guide element on the right		211 168	509	Countersunk screw M3x4	023 142
	402	Spring rod	209 791			
	541	Disc 4.3x7x0.5	022 153			
	542	Circlip 3.2	021 019			
	543	Spring	023 344			

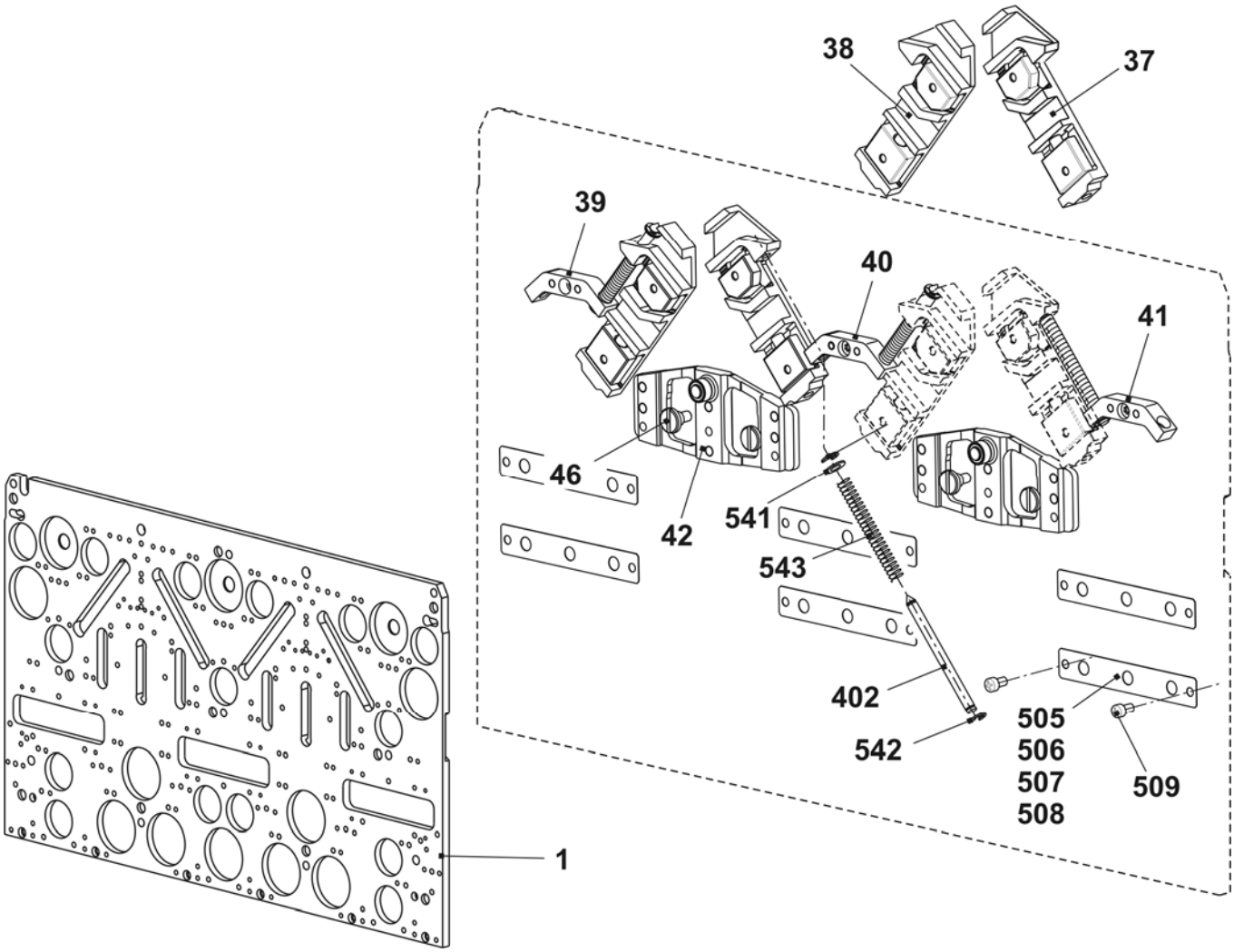

Cams E5 + E5m.4 + E7m.5 + E2,5.2 k&w + E2,5.2 mg + E3,5.2 k&w + E3,5.2 mg + E5.2 k&w + E5.2 mg

Pos	*Designation*	*Ident No*	*Pos*	*Designation*	*Ident No*
2	Entry cam on the left	213 304	23	Selector cam	212 946
3	Entry cam on the right	213 303	24	Pressure part take-over on the left	239 848
4	Entry cam at the top	210 285	25	Pressure part take-over on the right	239 849
5	Entry cam in the middle bottom E2,5.2 + E3,5.2 + E5 + E5.2	235 719	26	Tuck pressure part	239 621
			27	Limit cam on the left E5	210 289
6	Plate on the left	230 988	28	Limit cam on the right E5	210 290
7	Plate in the middle	231 035	29	Pointer E2,5.2 + E3,5.2	229 505
8	Plate on the right	231 036	30	Screw	210 335
9	Cam on the left	231 039	31	Stitch cam on the left E2,5.2 + E3,5.2 + E5 + E5.2	235 712
10	Cam on the right	231 041			
11	Cam in the middle	231 040	32	Stitch cam on the right E2,5.2 + E3,5.2 + E5 + E5.2	235 713
12	Cam	227 923			
13	Cam	210 254	33	Tuck limit cam E5	214 051
14	Cam on the left E5-14	212 265	34	Raising cam plate E4-12	204 372
15	Cam on the right E5-14	212 266	35	Receiving cam E5	210 386
16	Cam on the left	236 192	36	Raising cam without split E5	213 302
17	Cam on the right	236 193		Raising cam with split E5 Accessory	213 924
18	Cam on the left E5-14	212 274			
19	Cam	210 252	48	Cam on the right E5-14	212 275
20	Offering cam	210 185	49	Entry cam at the bottom on the left	235 718
21	Selector cam on the left	212 944	50	Entry cam at the bottom on the right	235 720
22	Selector cam on the right	212 947	51	Shoulder screw	239 626
			500	Cap screw M4x8	020 091

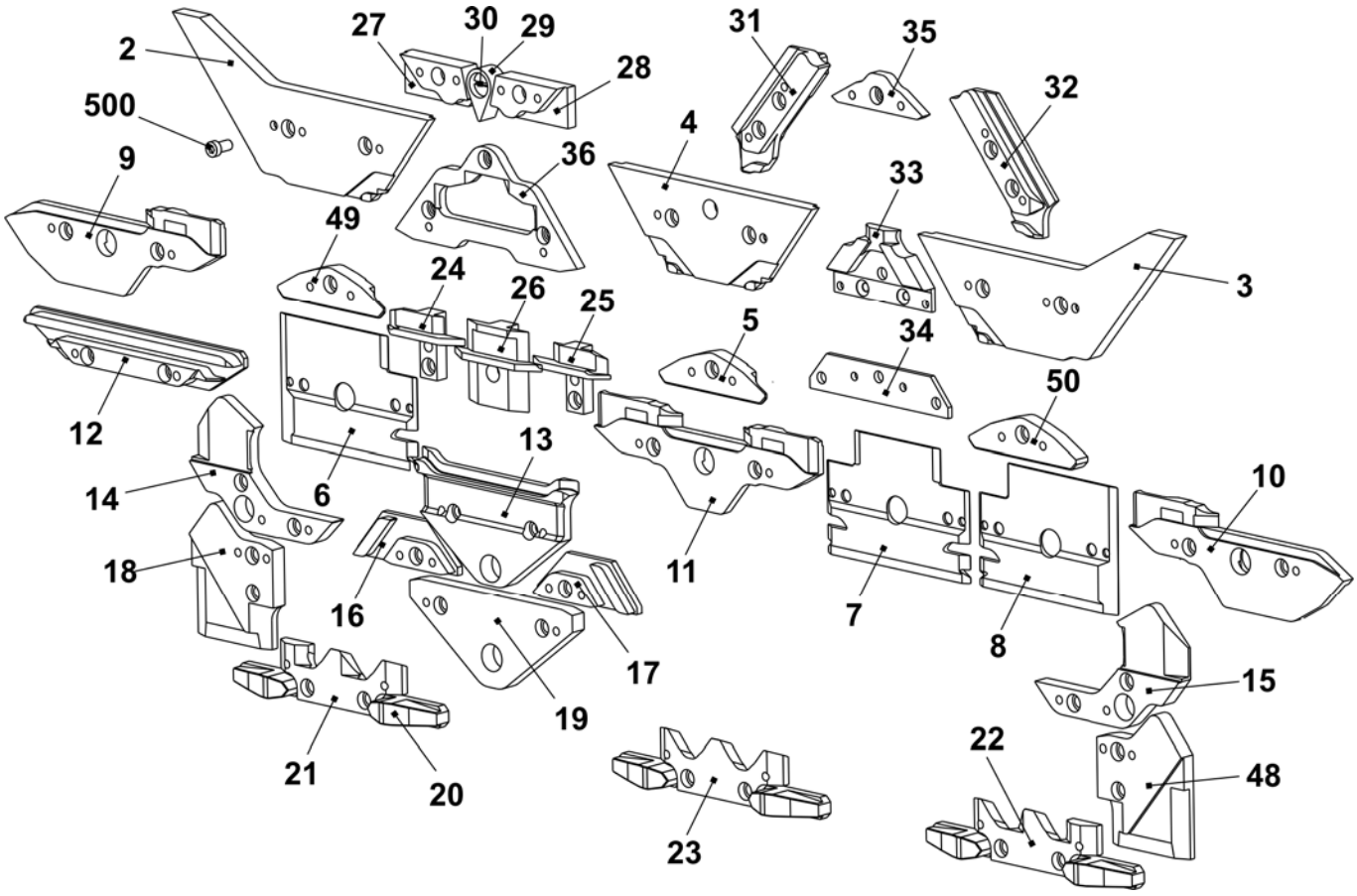

Cams for narrow coupling E5 + E5m.4 + E7m.5 + E2,5.2 k&w + E2,5.2 mg + E3,5.2 k&w + E3,5.2 mg + E5.2 k&w + E5.2 mg + E7 + E8 + E7m.8 + E8m.7

Pos	*Designation*	*Ident No*		*Pos*	*Designation*	*Ident No*
2	Entry cam on the right E5-14	216 220		3	Entry cam on the left E5-14	216 221
14	Cam on the right E5-14	216 168		15	Cam on the left E5-14	216 167
18	Cam on the right	216 166		48	Cam on the left	216 165

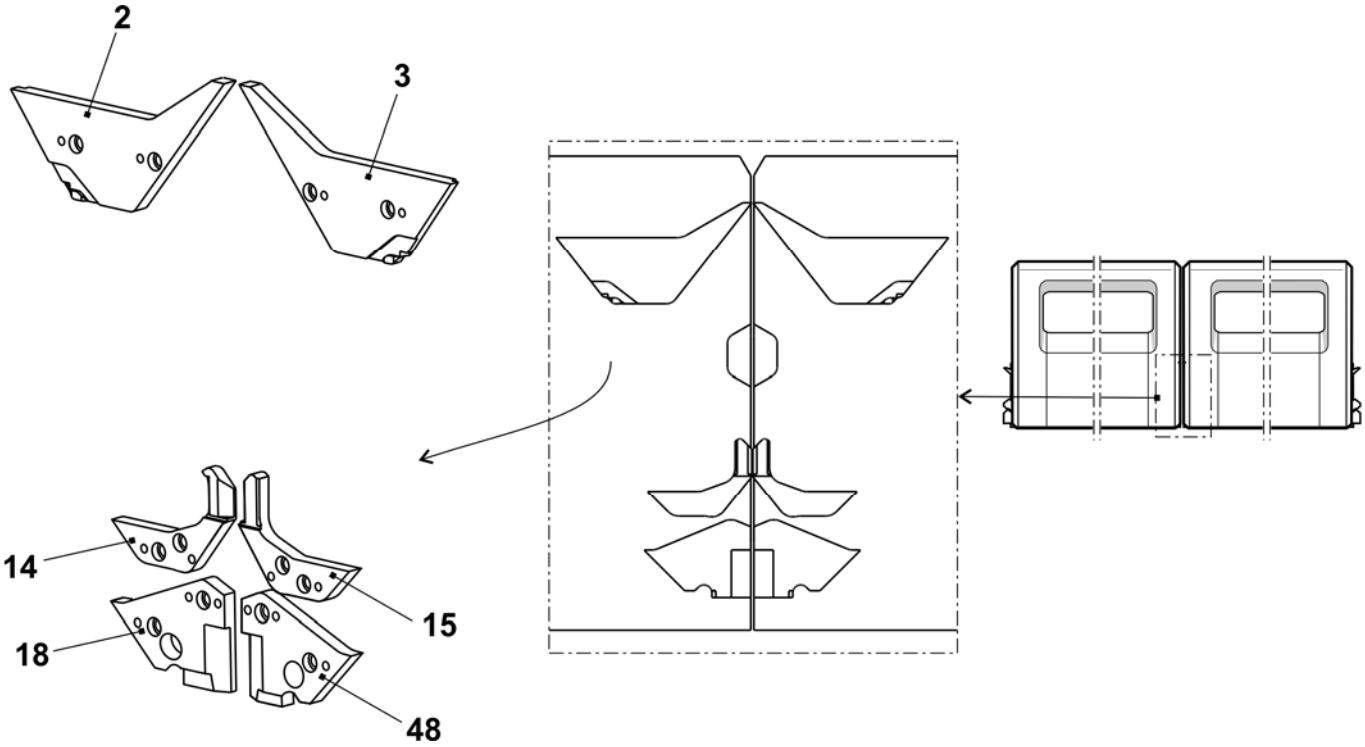

Cam box E7 + E8 + E7m.8 + E8m.7

Pos	Designation		Ident No	Pos	Designation	Ident No
Σ	**Cam box set complete E7- E8**		**244 389**	42	Switching piece	240 281
1	Cam plate		241 760	58	Shoulder screw	239 626
37	Stitch forming cam on the right complete E5-10		211 163	505	Shim 0.03x12x75	022 828
38	Stitch forming cam on the left complete E5-10		211 164	506	Shim 0.05x12x75	022 829
39	Rod guide element on the left		211 165	507	Shim 0.1x12x75	022 830
40	Rod guide element in the middle		211 166	508	Shim 0.2x12x75	022 831
41	Rod guide element on the right		211 168	509	Countersunk screw M3x4	023 142
	402	Spring rod	209 791			
	541	Disc 4.3x7x0.5	022 153			
	542	Circlip 3.2	021 019			
	543	Spring	023 344			

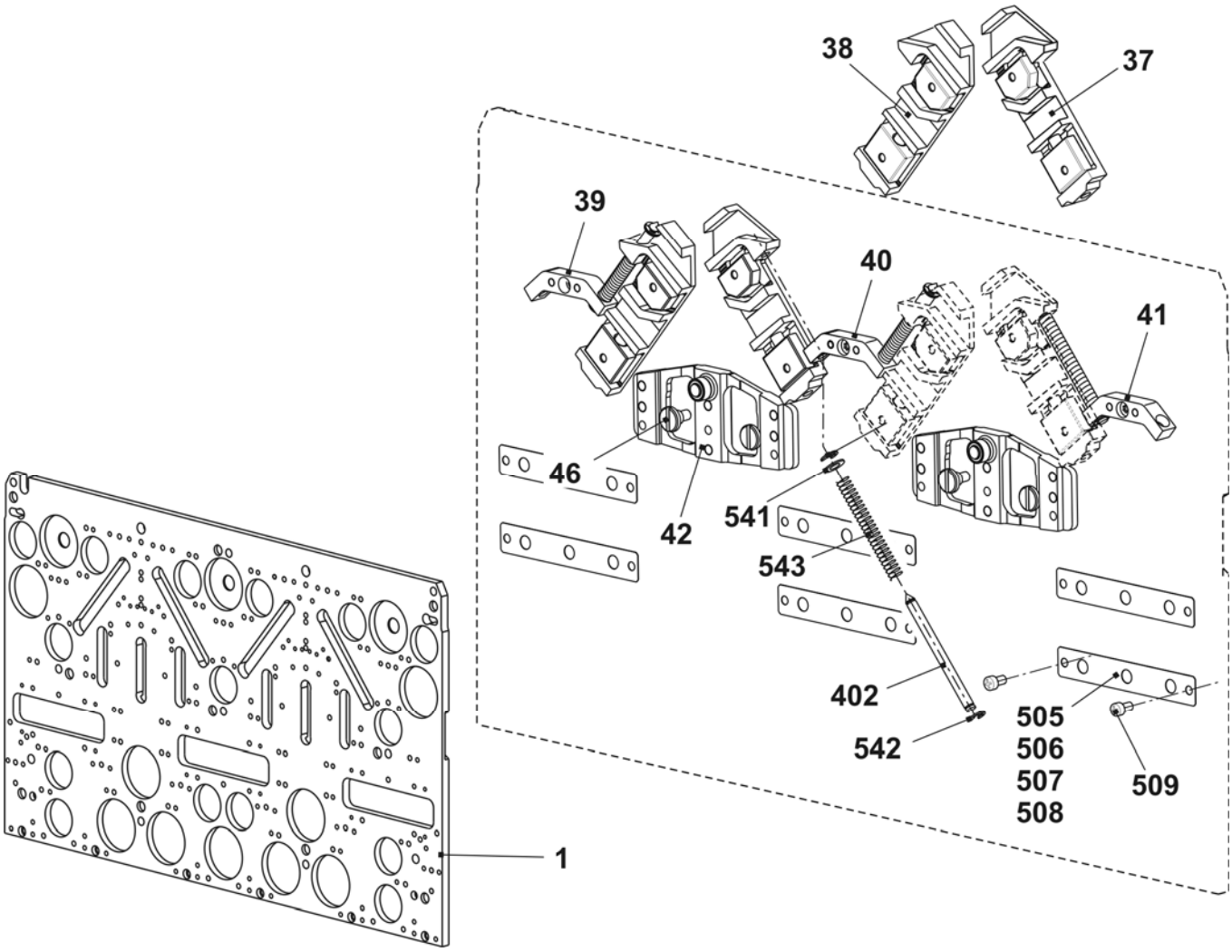

STOLL
THE RIGHT WAY TO KNIT

Cams E7 + E8 + E7m.8 + E8m.7

Pos	Designation	Ident No	Pos	Designation	Ident No
2	Entry cam on the left	213 304	23	Selector cam	212 946
3	Entry cam on the right	213 303	24	Pressure part take-over on the left	239 848
4	Entry cam at the top	210 285	25	Pressure part take-over on the right	239 849
5	Entry cam at the bottom E5-8	212 395	26	Tuck pressure part	239 621
6	Plate on the left	230 988	27	Limit cam on the left E7-8	210 291
7	Plate in the middle	231 035	28	Limit cam on the right E7-8	210 292
8	Plate on the right	231 036	29	Pointer E5-8	210 336
9	Cam on the left	231 039	30	Screw	210 335
10	Cam on the right	231 041	31	Stitch cam on the left E7-8	210 324
11	Cam in the middle	231 040	32	Stitch cam on the right E7-8	210 323
12	Cam	227 923	33	Tuck limit cam E7-8	214 052
13	Cam	210 254	34	Raising cam plate E4-12	204 372
14	Cam on the left E5-14	212 265	35	Receiving cam E7-8	210 339
15	Cam on the right E5-14	212 266	36	Raising cam without split E7-8	213 297
16	Cam on the left	236 192		Raising cam with split E7-8	213 301
17	Cam on the right	236 193		Accessory	
18	Cam on the left E5-14	212 274	48	Cam on the right E5-14	212 275
19	Cam	210 252	49	Entry cam on the left	213 161
20	Offering cam	210 185	50	Entry cam on the right	213 162
21	Selector cam on the left	212 944	500	Cap screw M4x8	020 091
22	Selector cam on the right	212 947			

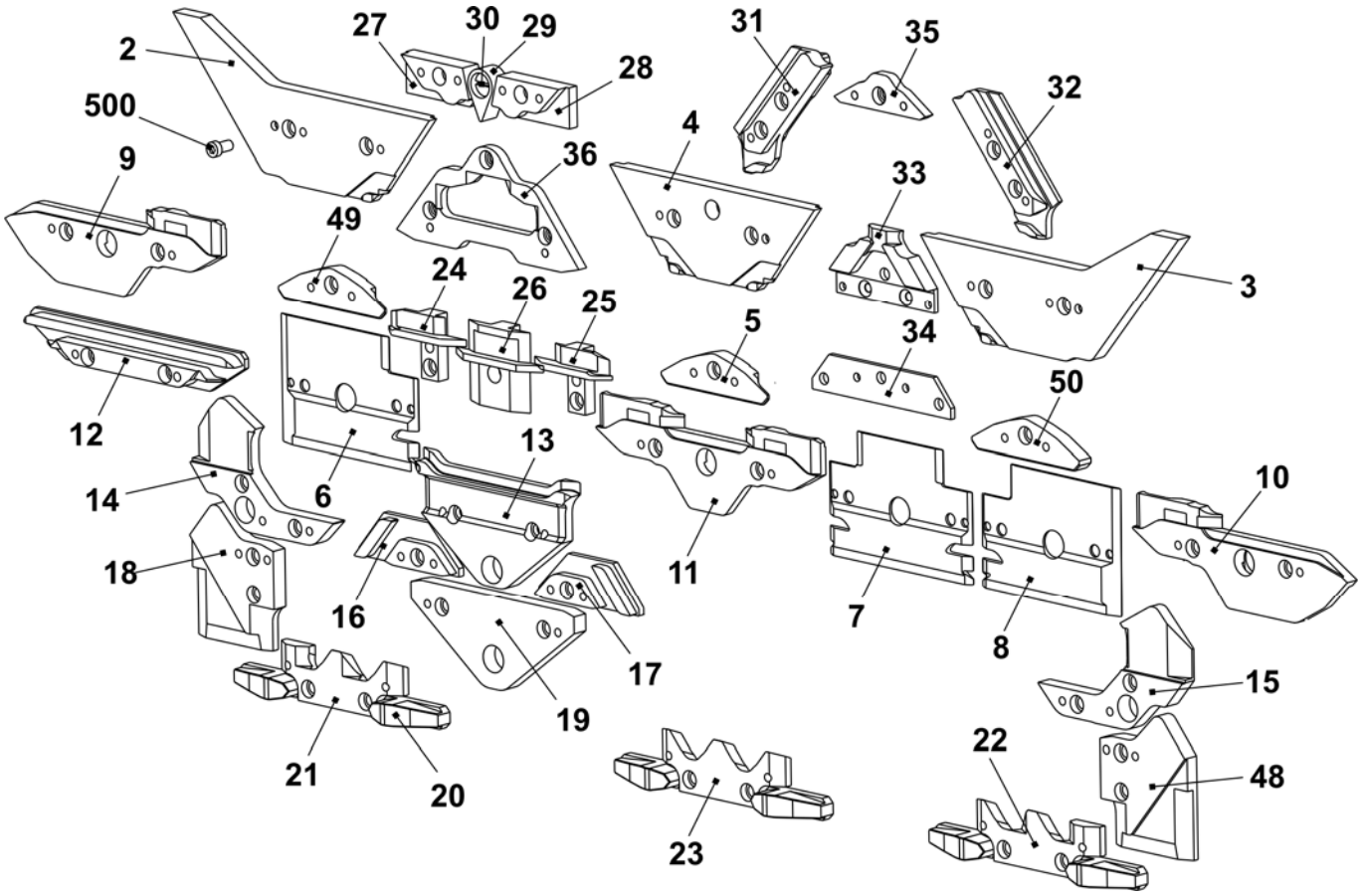

Cam box E10

Pos	Designation		Ident No	Pos	Designation	Ident No
Σ	**Cam box set complete E10**		**244 382**	42	Switching piece	240 281
1	Cam plate		241 760	58	Shoulder screw	239 626
37	Stitch forming cam on the right complete E5-10		211 163	505	Shim 0.03x12x75	022 828
38	Stitch forming cam on the left complete E5-10		211 164	506	Shim 0.05x12x75	022 829
39	Rod guide element on the left		211 165	507	Shim 0.1x12x75	022 830
40	Rod guide element in the middle		211 166	508	Shim 0.2x12x75	022 831
41	Rod guide element on the right		211 168	509	Countersunk screw M3x4	023 142
	402	Spring rod	209 791			
	541	Disc 4.3x7x0.5	022 153			
	542	Circlip 3.2	021 019			
	543	Spring	023 344			

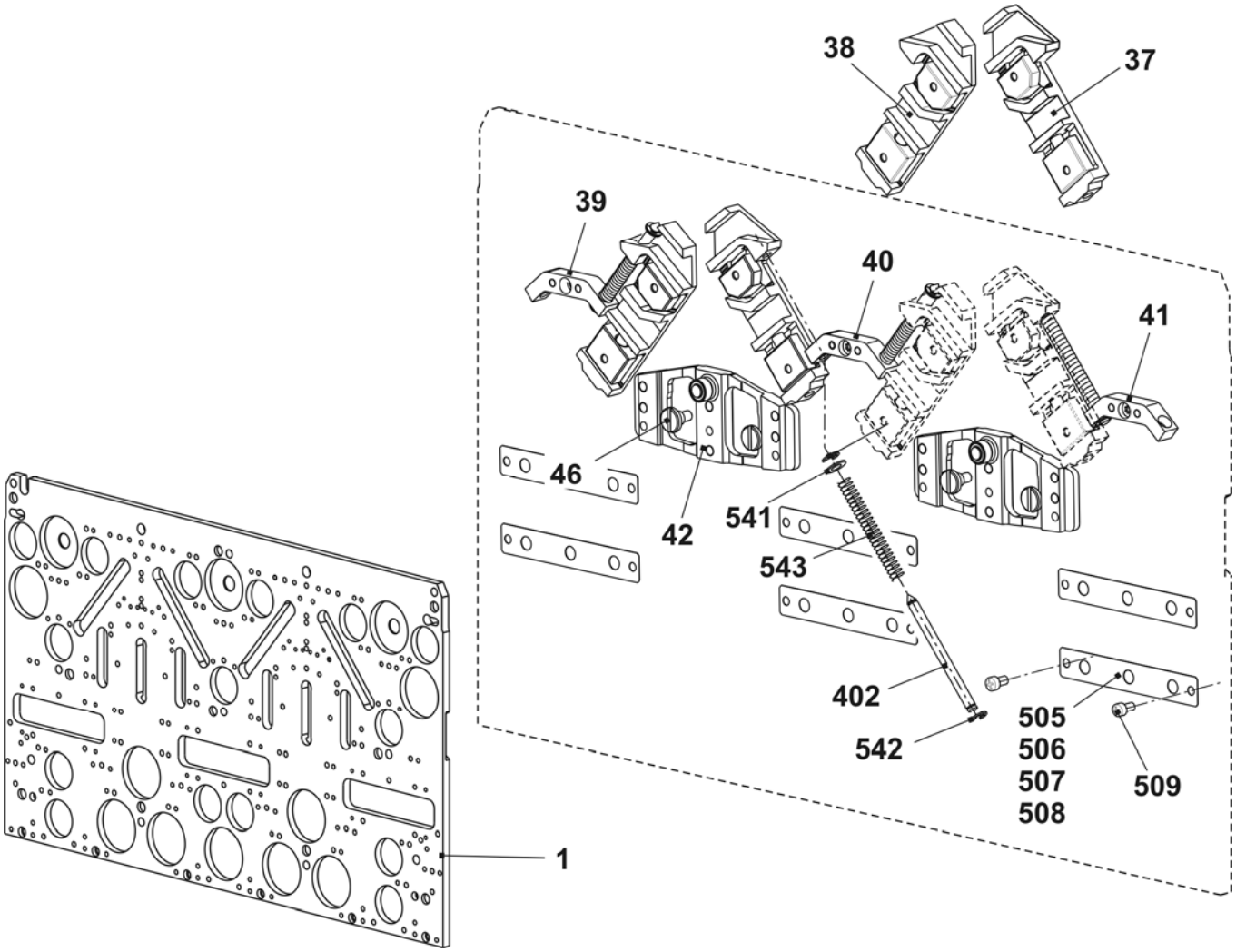

Cams E10

Pos	Designation	Ident No	Pos	Designation	Ident No
2	Entry cam on the left	243 595	23	Selector cam	212 946
3	Entry cam on the right	243 597	24	Pressure part take-over on the left	239 848
4	Entry cam at the top	243 596	25	Pressure part take-over on the right	239 849
5	Entry cam at the bottom - 1.5 E10 - E14	216 328	26	Tuck pressure part	239 621
6	Plate on the left	230 988	27	Limit cam E10	210 611
7	Plate in the middle	231 035	29	Pointer E10 – E14	210 349
8	Plate on the right	231 036	30	Screw	210 335
9	Cam on the left	231 039	31	Stitch cam on the left E10-E14 + E7.2	236 318
10	Cam on the right	231 041	32	Stitch cam on the right E10-E14 + E7.2 (at the front)	236 319
11	Cam in the middle	231 040	33	Tuck limit cam E10 + E7.2	236 345
12	Cam	227 923	34	Raising cam plate E4-12	204 372
13	Cam	210 254	35	Receiving cam E10 - E12	210 595
14	Cam on the left E5-14	212 265	36	Raising cam without split E10 – E12 + E7.2	237 993
15	Cam on the right E5-14	212 266			
16	Cam on the left	236 192		Raising cam with split E10 – E12 + E7.2 Accessory	213 300
17	Cam on the right	236 193			
18	Cam on the left E5-14	212 274	48	Cam on the right E5-14	212 275
19	Cam	210 252	49	Entry cam on the left -1.5 E10 - E14	216 329
20	Offering cam	210 185	50	Entry cam on the right -1.5 E10 - E14	216 330
21	Selector cam on the left	212 944	500	Cap screw M4x8	020 091
22	Selector cam on the right	212 947	60	Stitch cam at the rear on the right E10 - E12	236 320

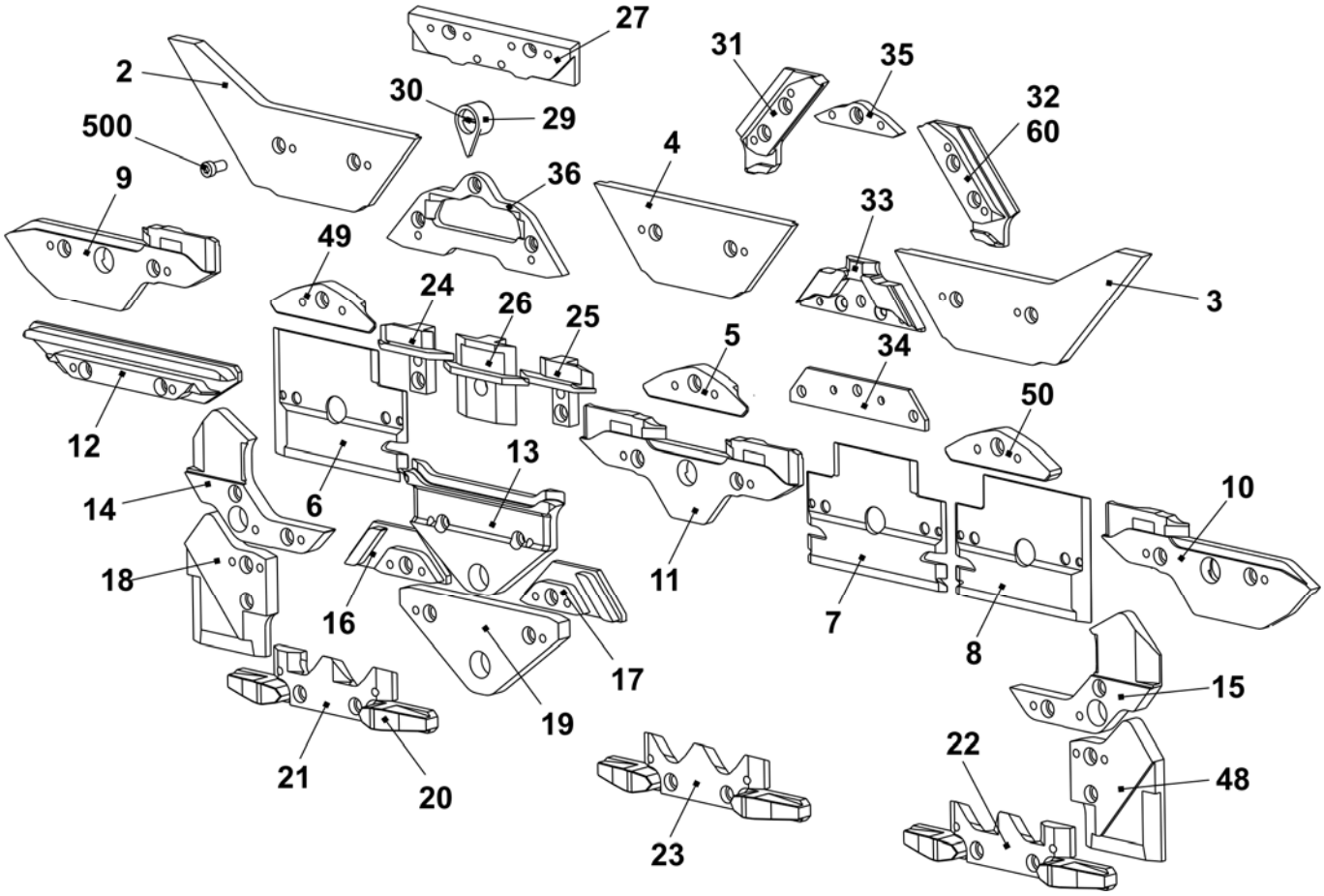

Cams for narrow coupling E10 + E10m.12 + E12 + E12m.10 +E6.2 mg + E14 + E7.2 mg + E16 + E18 + E8.2 mg

Pos	*Designation*	*Ident No*		*Pos*	*Designation*	*Ident No*
2	Entry cam on the right	243 858		3	Entry cam on the left	243 857
14	Cam on the right E5-14	216 168		15	Cam on the left E5-14	216 167
18	Cam on the right	216 166		48	Cam on the left	216 165

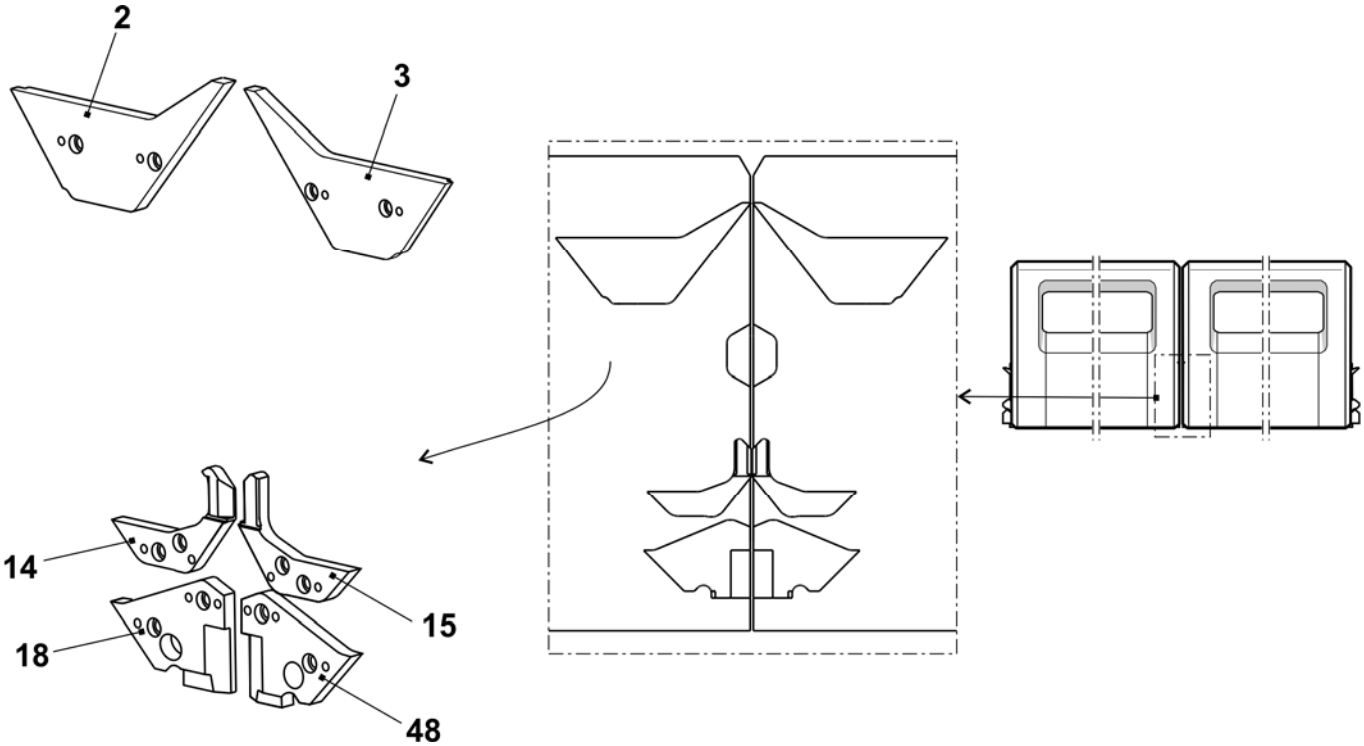

Cam box E10m.12

Pos	Designation		Ident No	Pos	Designation	Ident No
Σ	**Cam box set complete E10m.12**		**244 392**	42	Switching piece	240 281
1	Cam plate		241 760	58	Shoulder screw	239 626
37	Stitch forming cam on the right complete E5-10		211 163	505	Shim 0.03x12x75	022 828
38	Stitch forming cam on the left complete E5-10		211 164	506	Shim 0.05x12x75	022 829
39	Rod guide element on the left		211 165	507	Shim 0.1x12x75	022 830
40	Rod guide element in the middle		211 166	508	Shim 0.2x12x75	022 831
41	Rod guide element on the right		211 168	509	Countersunk screw M3x4	023 142
	402	Spring rod	209 791			
	541	Disc 4.3x7x0.5	022 153			
	542	Circlip 3.2	021 019			
	543	Spring	023 344			

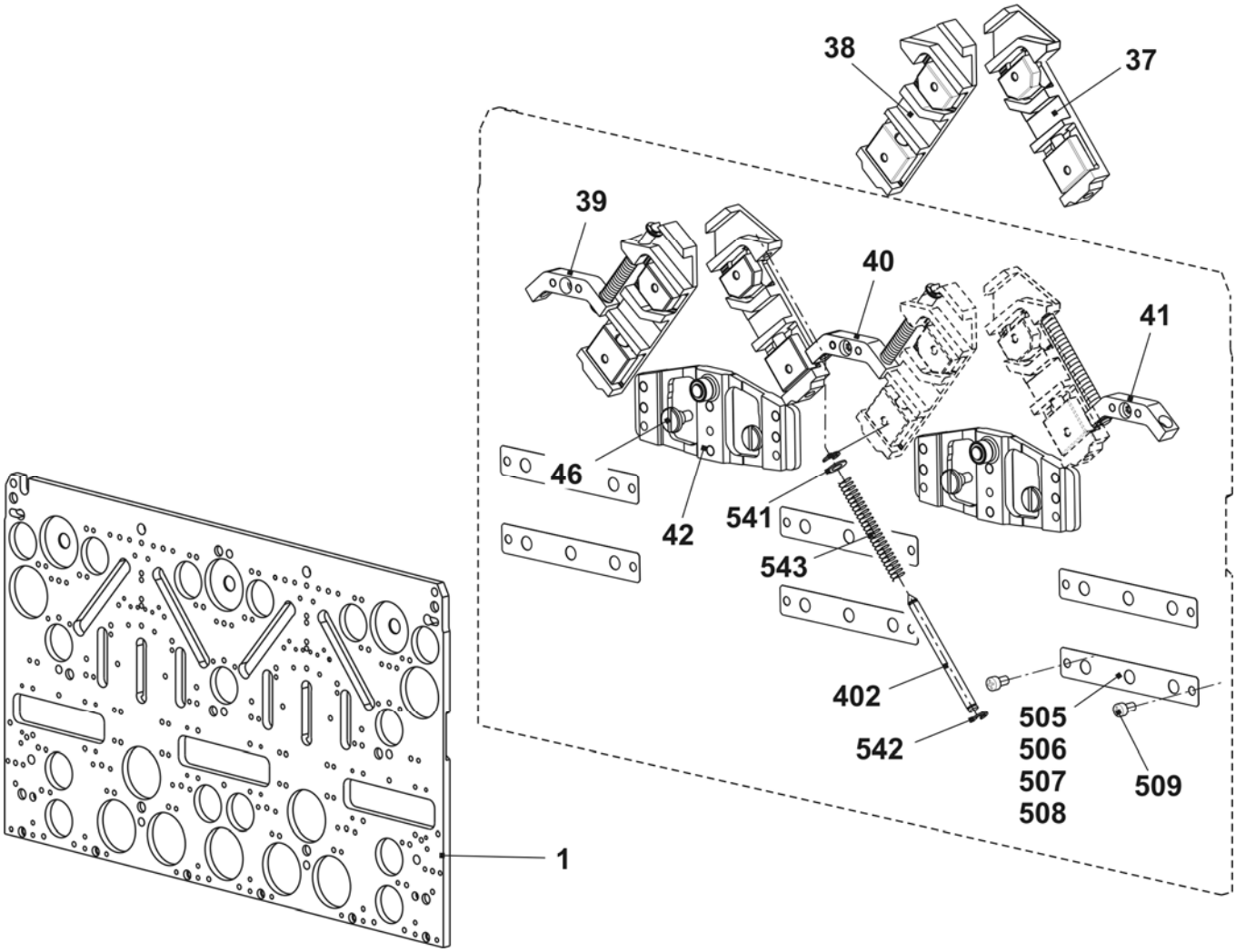

Cams E10m.12

Pos	Designation	Ident No	Pos	Designation	Ident No
2	Entry cam on the left	243 595	23	Selector cam	212 946
3	Entry cam on the right	243 597	24	Pressure part take-over on the left	239 848
4	Entry cam at the top	243 596	25	Pressure part take-over on the right	239 849
5	Entry cam at the bottom - 1.5 E10 - E14	216 328	26	Tuck pressure part	239 621
6	Plate on the left	230 988	27	Limit cam E12 – E14	210 612
7	Plate in the middle	231 035	29	Pointer E10 – E14	210 349
8	Plate on the right	231 036	30	Screw	210 335
9	Cam on the left	231 039	31	Stitch cam on the left E10-E14 + E7.2	236 318
10	Cam on the right	231 041	32	Stitch cam on the right E10-E14 + E7.2	236 319
11	Cam in the middle	231 040	33	Tuck limit cam E12	236 403
12	Cam	227 923	34	Raising cam plate E4-12	204 372
13	Cam	210 254	35	Receiving cam E10 - E12	210 595
14	Cam on the left E5-14	212 265	36	Raising cam without split E10 – E12 + E7.2	237 993
15	Cam on the right E5-14	212 266			
16	Cam on the left	236 192		Raising cam with split E10 – E12 + E7.2 Accessory	213 300
17	Cam on the right	236 193			
18	Cam on the left E5-14	212 274	48	Cam on the right E5-14	212 275
19	Cam	210 252	49	Entry cam on the left -1.5 E10 - E14	216 329
20	Offering cam	210 185	50	Entry cam on the right -1.5 E10 - E14	216 330
21	Selector cam on the left	212 944	500	Cap screw M4x8	020 091
22	Selector cam on the right	212 947	60	Stitch cam at the rear on the right E10 - E12	236 320

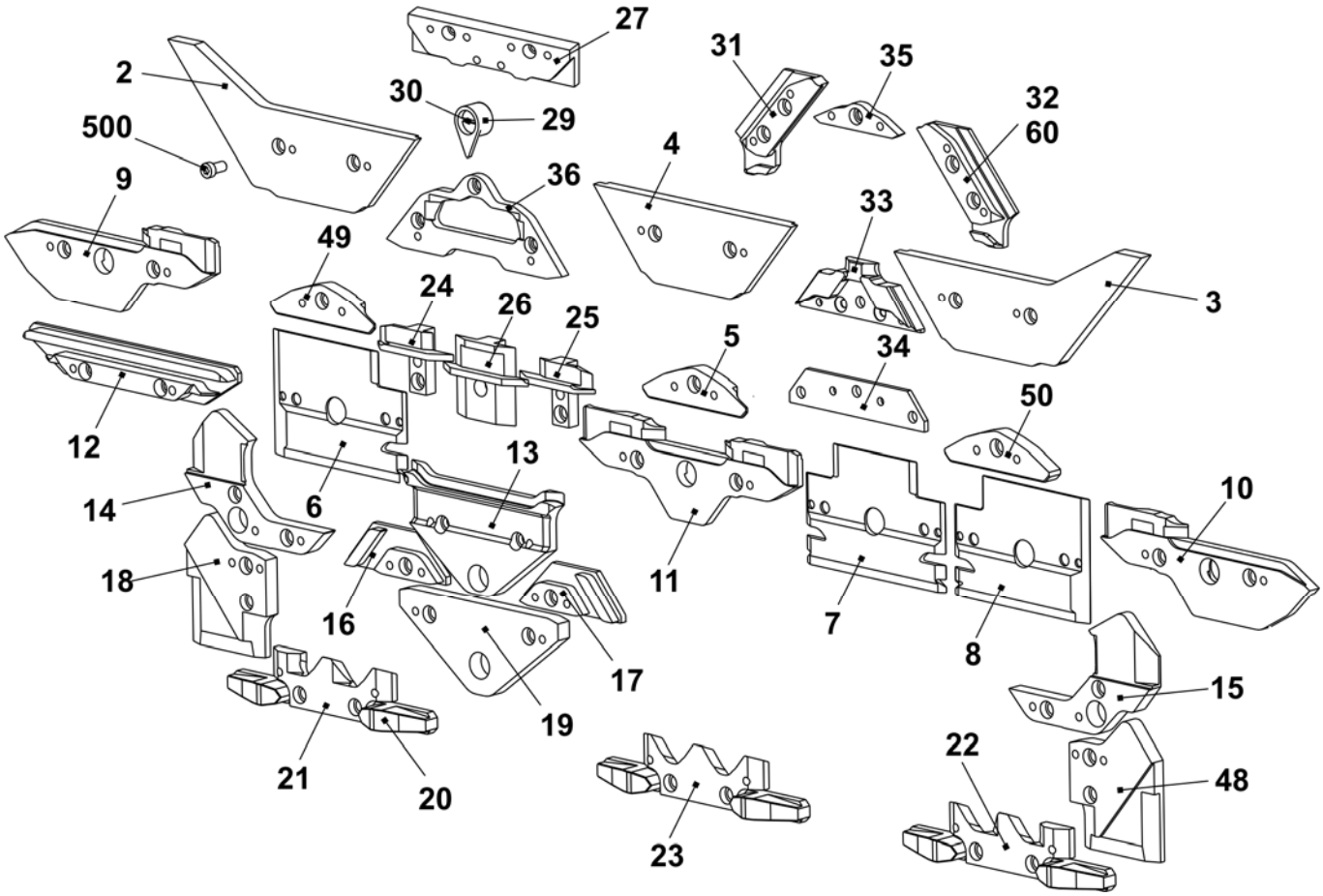

Cam box E6.2 k&w

Pos	Designation		Ident No	Pos	Designation	Ident No
Σ	**Cam box set complete E6.2 k&w**		**243 403**	42	Switching piece	240 281
1	Cam plate		241 760	58	Shoulder screw	239 626
37	Stitch forming cam on the right complete E12 – E14		214 088	505	Shim 0.03x12x75	022 828
38	Stitch forming cam on the left complete E12 – E14		214 089	506	Shim 0.05x12x75	022 829
39	Rod guide element on the left		211 165	507	Shim 0.1x12x75	022 830
40	Rod guide element in the middle		211 166	508	Shim 0.2x12x75	022 831
41	Rod guide element on the right		211 168	509	Countersunk screw M3x4	023 142
	402	Spring rod	209 791			
	541	Disc 4.3x7x0.5	022 153			
	542	Circlip 3.2	021 019			
	543	Spring	023 344			

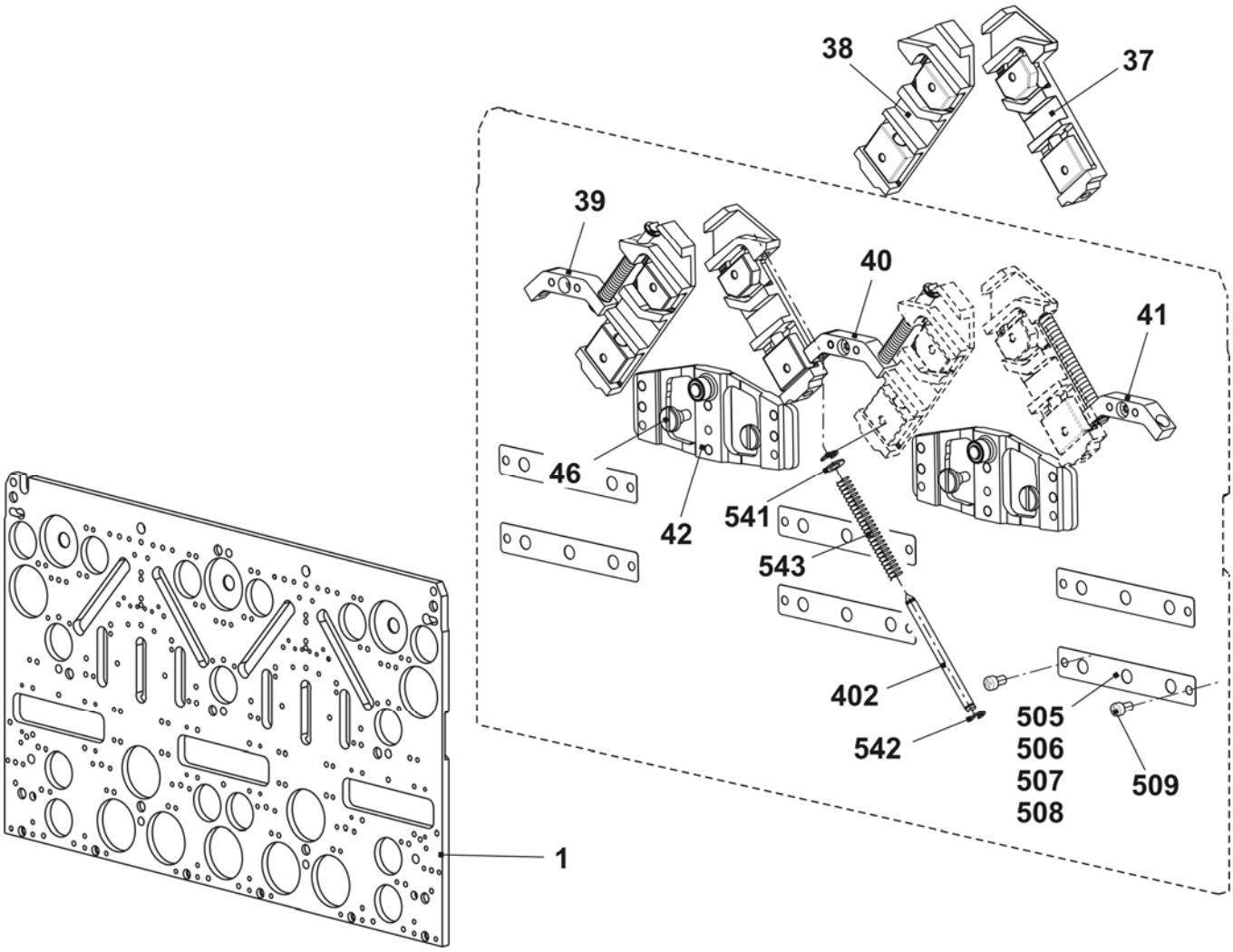

Cams E6.2 k&w + E7.2 k&w

Pos	*Designation*	*Ident No*	*Pos*	*Designation*	*Ident No*
2	Entry cam on the left E6.2 + E7.2 + E9.2	243 870	23	Selector cam	|212 946
3	Entry cam on the right E6.2 + E7.2 + E9.2	243 872	24	Pressure part take-over on the left	239 848
4	Entry cam in the middle E6.2 + E7.2 + E9.2	243 871	25	Pressure part take-over on the right	239 849
5	Entry cam at the bottom E5 - E8	212 395	26	Tuck pressure part	239 621
6	Plate on the left	230 988	27	Limit cam E6.2	218 306
7	Plate in the middle	231 035	29	Pointer E10 – E14	210 349
8	Plate on the right	231 036	30	Screw	210 335
9	Cam on the left	231 039	31	Stitch cam on the left E6.2	236 392
10	Cam on the right	231 041	32	Stitch cam on the right E6.2	236 393
11	Cam in the middle	231 040	33	Tuck limit cam E6.2	236 429
12	Cam	227 923	34	Raising cam plate E4-12	204 372
13	Cam	210 254	35	Receiving cam E6.2	236 943
14	Cam on the left E5 - E14	212 265	36	Raising cam part without split E6.2	236 766
15	Cam on the right E5 - E14	212 266		Raising cam part with split E6.2 Accessory	237 948
16	Cam on the left	236 192			
17	Cam on the right	236 193	48	Cam on the right E5-14	212 275
18	Cam on the left E5 - E14	212 274	49	Entry cam on the left E5-8	213 161
19	Cam	210 252	50	Entry cam on the right E5-8	213 162
20	Offering cam	210 185	500	Cap screw M4x8	020 091
21	Selector cam on the left	212 944			
22	Selector cam on the right	212 947			

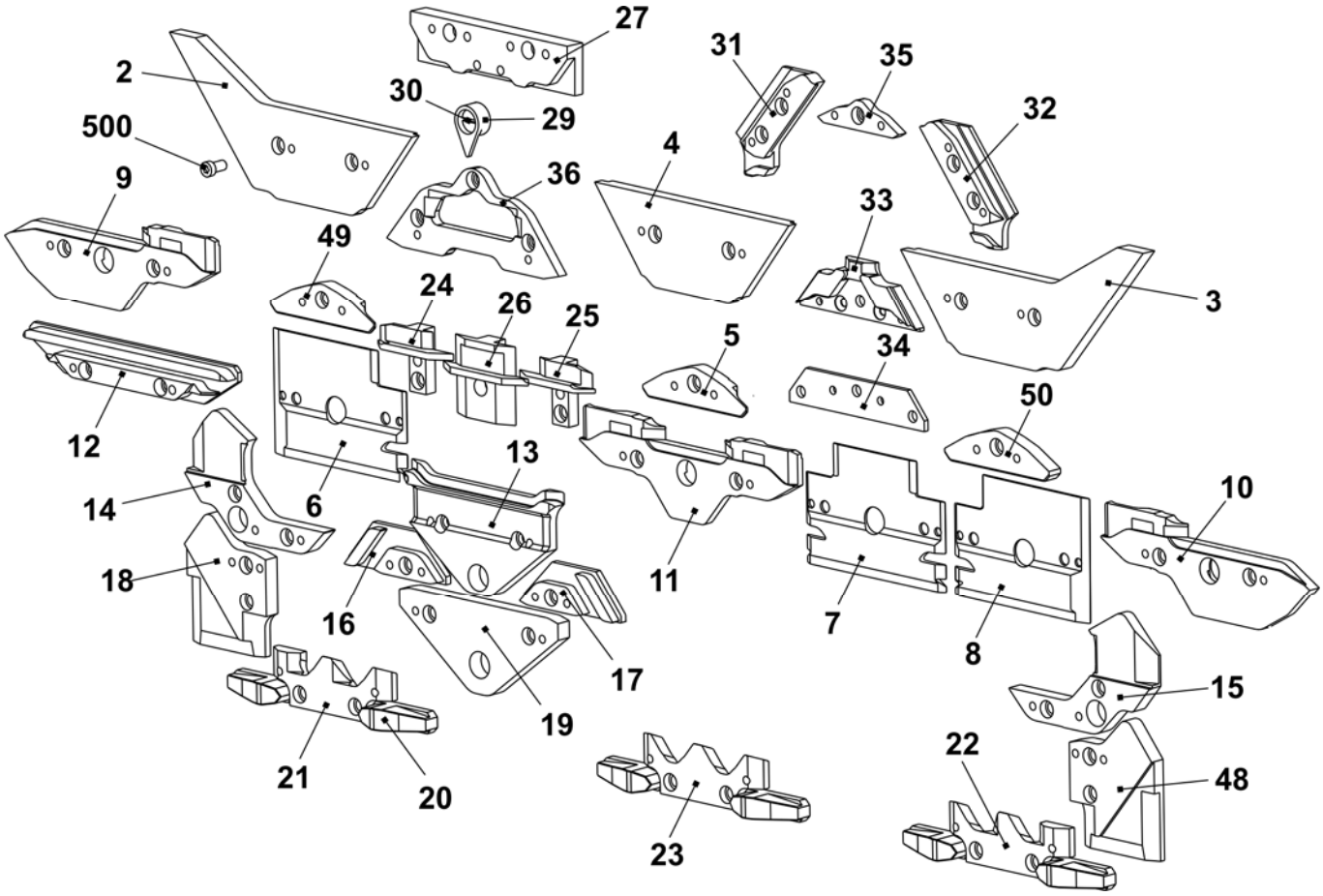

Cams for narrow coupling E6.2 k&w + E7.2 k&w

Pos	Designation	Ident No		Pos	Designation	Ident No
2	Entry cam on the right E6.2+7.2+9.2	243 878		3	Entry cam on the left E6.2+7.2+9.2	243 877
14	Cam on the right E5-14	216 168		15	Cam on the left E5-14	216 167
18	Cam on the right	216 166		48	Cam on the left	216 165

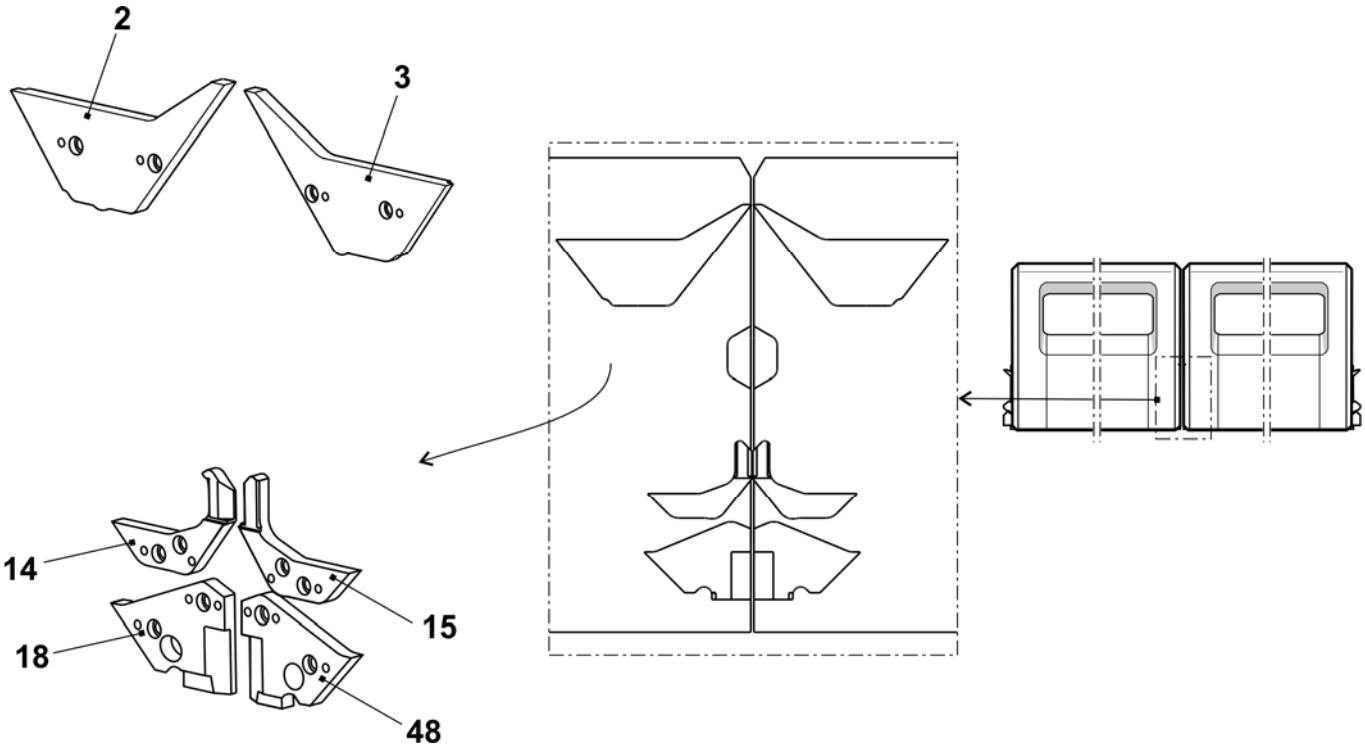

Cam box E6.2 mg

Pos	Designation		Ident No	Pos	Designation	Ident No
Σ	**Cam box set complete E6.2 mg**		**242 275**	42	Switching piece	240 281
1	Cam plate		241 760	58	Shoulder screw	239 626
37	Stitch forming cam on the right complete E12 – E14		214 088	505	Shim 0.03x12x75	022 828
38	Stitch forming cam on the left complete E12 – E14		214 089	506	Shim 0.05x12x75	022 829
39	Rod guide element on the left		211 165	507	Shim 0.1x12x75	022 830
40	Rod guide element in the middle		211 166	508	Shim 0.2x12x75	022 831
41	Rod guide element on the right		211 168	509	Countersunk screw M3x4	023 142
	402	Spring rod	209 791			
	541	Disc 4.3x7x0.5	022 153			
	542	Circlip 3.2	021 019			
	543	Spring	023 344			

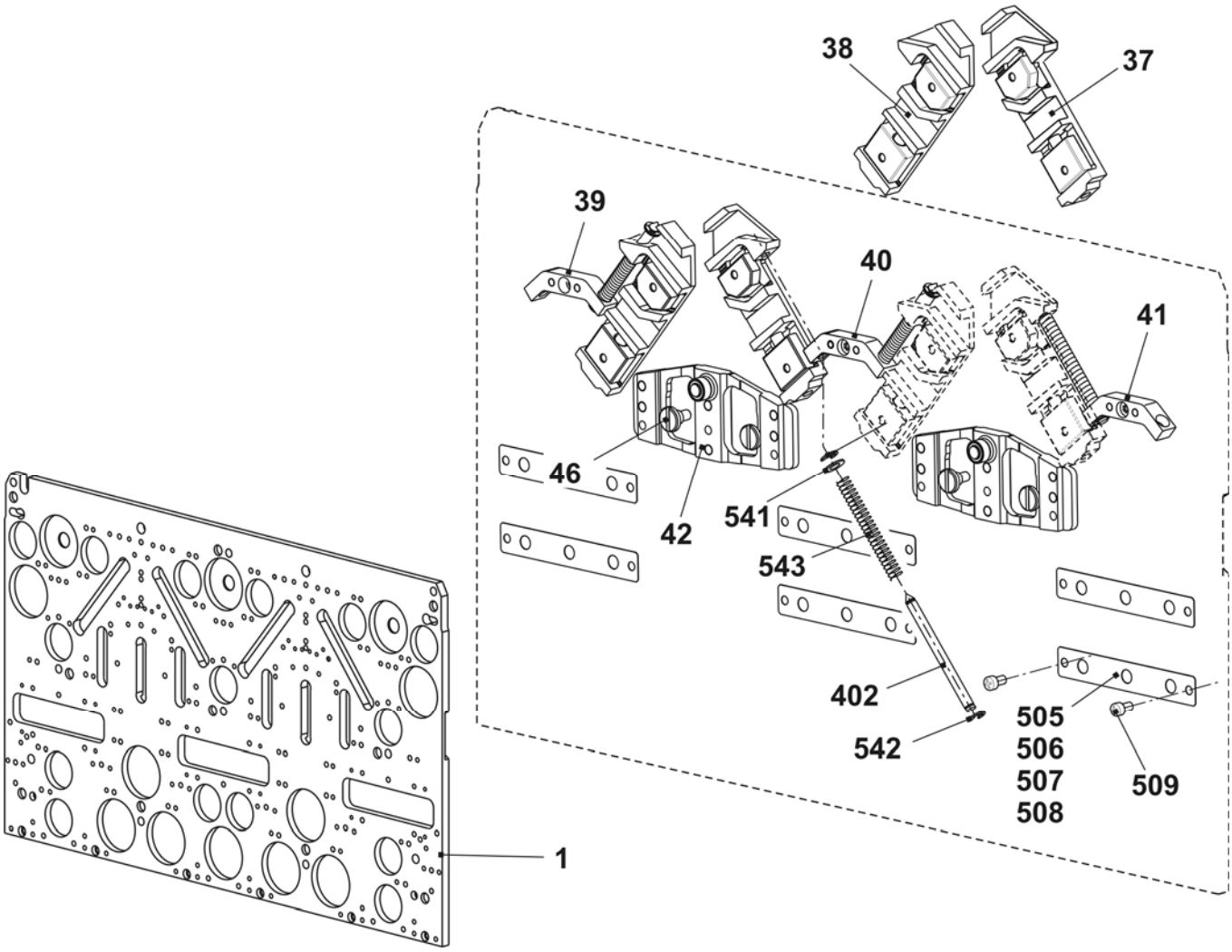

Cams E6.2 mg

Pos	Designation	Ident No	Pos	Designation	Ident No
2	Entry cam on the left	243 595	23	Selector cam	212 946
3	Entry cam on the right	243 597	24	Pressure part take-over on the left	239 848
4	Entry cam at the top	243 596	25	Pressure part take-over on the right	239 849
5	Entry cam at the bottom - 1.5 E10 - E14	216 328	26	Tuck pressure part	239 621
6	Plate on the left	230 988	27	Limit cam E6.2	218 306
7	Plate in the middle	231 035	29	Pointer E10 – E14	210 349
8	Plate on the right	231 036	30	Screw	210 335
9	Cam on the left	231 039	31	Stitch cam on the left E6.2	236 392
10	Cam on the right	231 041	32	Stitch cam on the right E6.2	236 393
11	Cam in the middle	231 040	33	Tuck limit cam E6.2	236 429
12	Cam	227 923	34	Raising cam plate E4 - E12	204 372
13	Cam	210 254	35	Receiving cam E6.2	236 943
14	Cam on the left E5 - E14	212 265	36	Knitting raising cam E6.2 without split	236 766
15	Cam on the right E5 – E14	212 266			
16	Cam on the left	236 192		Knitting raising cam with split E6.2 Accessory	237 948
17	Cam on the right	236 193			
18	Cam on the left E5 – E14	212 274	48	Cam on the right E5-14	212 275
19	Cam	210 252	49	Entry cam on the left -1.5 E10 - E14	216 329
20	Offering cam	210 185	50	Entry cam on the right -1.5 E10 - E14	216 330
21	Selector cam on the left	212 944	500	Cap screw M4x8	020 091
22	Selector cam on the right	212 947			

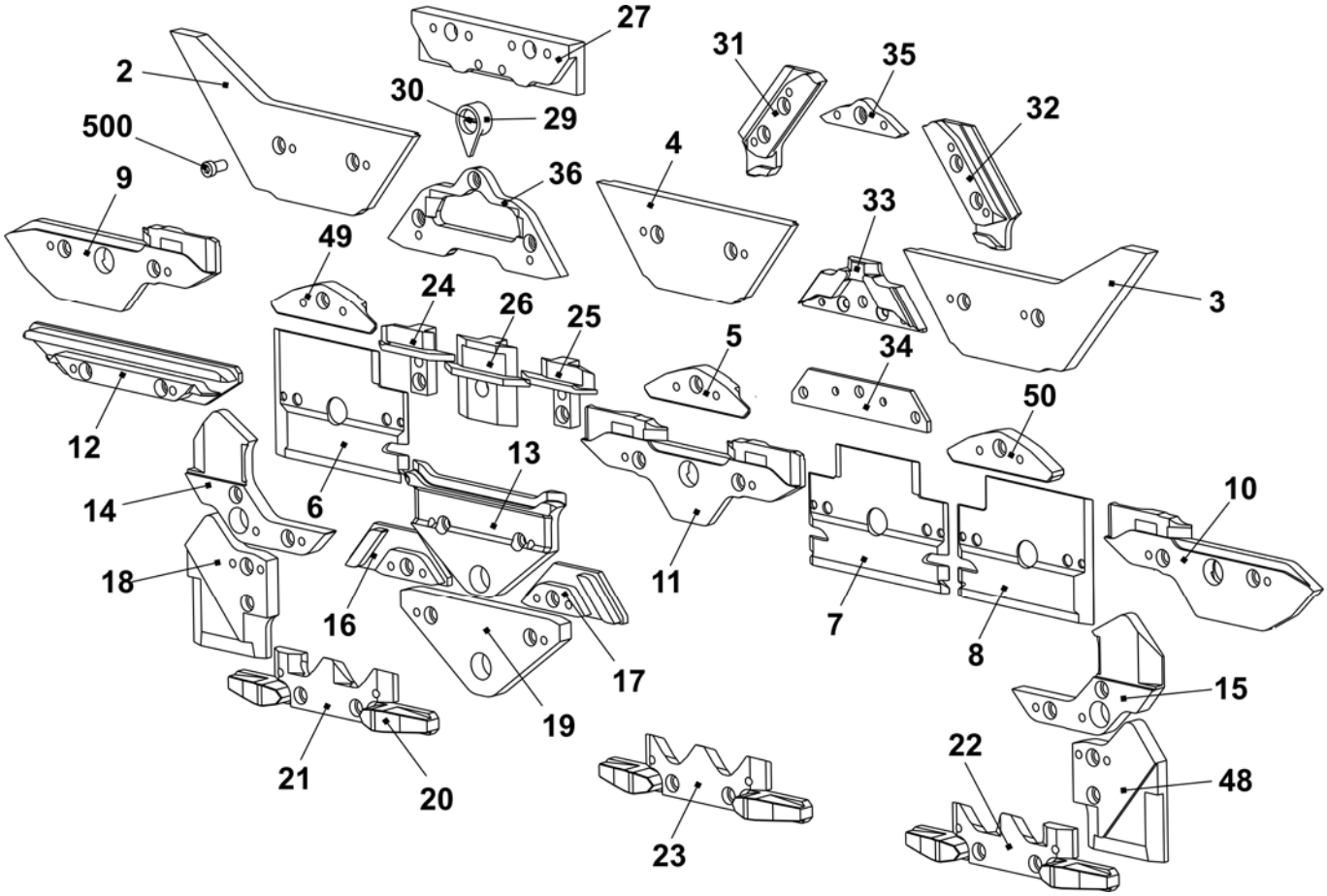

Cam box E12

Pos	Designation		Ident No	Pos	Designation	Ident No
Σ	**Cam box set complete E12**		**243 917**	42	Switching piece	240 281
1	Cam plate		241 760	58	Shoulder screw	239 626
37	Stitch forming cam on the right complete E12 – E14		214 088	505	Shim 0.03x12x75	022 828
38	Stitch forming cam on the left complete E12 – E14		214 089	506	Shim 0.05x12x75	022 829
39	Rod guide element on the left		211 165	507	Shim 0.1x12x75	022 830
40	Rod guide element in the middle		211 166	508	Shim 0.2x12x75	022 831
41	Rod guide element on the right		211 168	509	Countersunk screw M3x4	023 142
	402	Spring rod	209 791			
	541	Disc 4.3x7x0.5	022 153			
	542	Circlip 3.2	021 019			
	543	Spring	023 344			

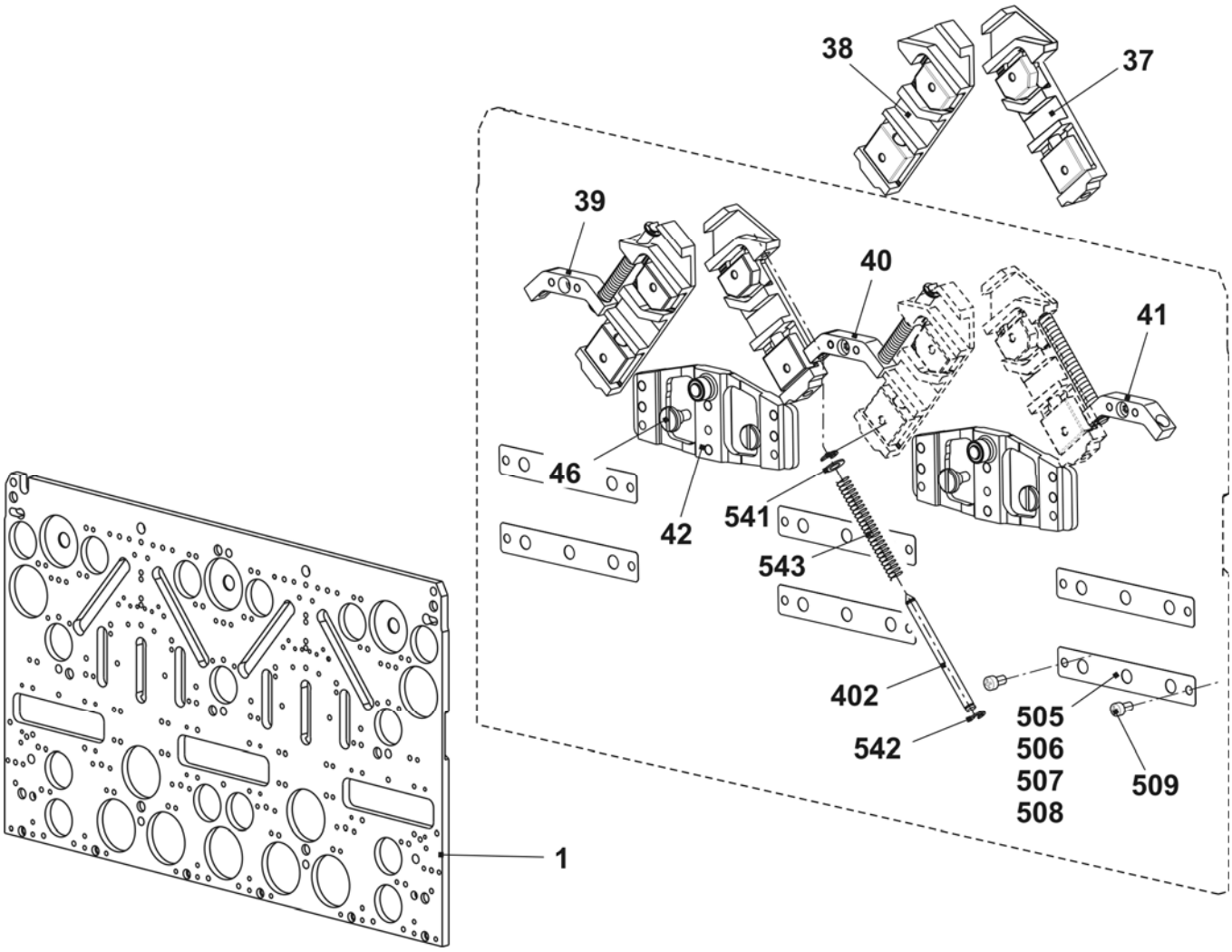

Cams E12

Pos	Designation	Ident No	Pos	Designation	Ident No
2	Entry cam on the left	243 595	23	Selector cam	212 946
3	Entry cam on the right	243 597	24	Pressure part take-over on the left	239 848
4	Entry cam at the top	243 596	25	Pressure part take-over on the right	239 849
5	Entry cam at the bottom - 1.5 E10 - E14	216 328	26	Tuck pressure part	239 621
6	Plate on the left	230 988	27	Limit cam E12 – E14	210 612
7	Plate in the middle	231 035	29	Pointer E10 – E14	210 349
8	Plate on the right	231 036	30	Screw	210 335
9	Cam on the left	231 039	31	Stitch cam on the left E10-E14 + E7.2	236 318
10	Cam on the right	231 041	32	Stitch cam on the right E10-E14 + E7.2	236 319
11	Cam in the middle	231 040	33	Tuck limit cam E12	236 403
12	Cam	227 923	34	Raising cam plate E4-12	204 372
13	Cam	210 254	35	Receiving cam E10 - E12	210 595
14	Cam on the left E5-14	212 265	36	Raising cam without split E10 – E12 + E7.2	237 993
15	Cam on the right E5-14	212 266			
16	Cam on the left	236 192		Raising cam with split E10 – E12 + E7.2 Accessory	213 300
17	Cam on the right	236 193			
18	Cam on the left E5-14	212 274	48	Cam on the right E5-14	212 275
19	Cam	210 252	49	Entry cam on the left -1.5 E10 - E14	216 329
20	Offering cam	210 185	50	Entry cam on the right -1.5 E10 - E14	216 330
21	Selector cam on the left	212 944	500	Cap screw M4x8	020 091
22	Selector cam on the right	212 947	60	Stitch cam at the rear on the right E10 - E12	236 320

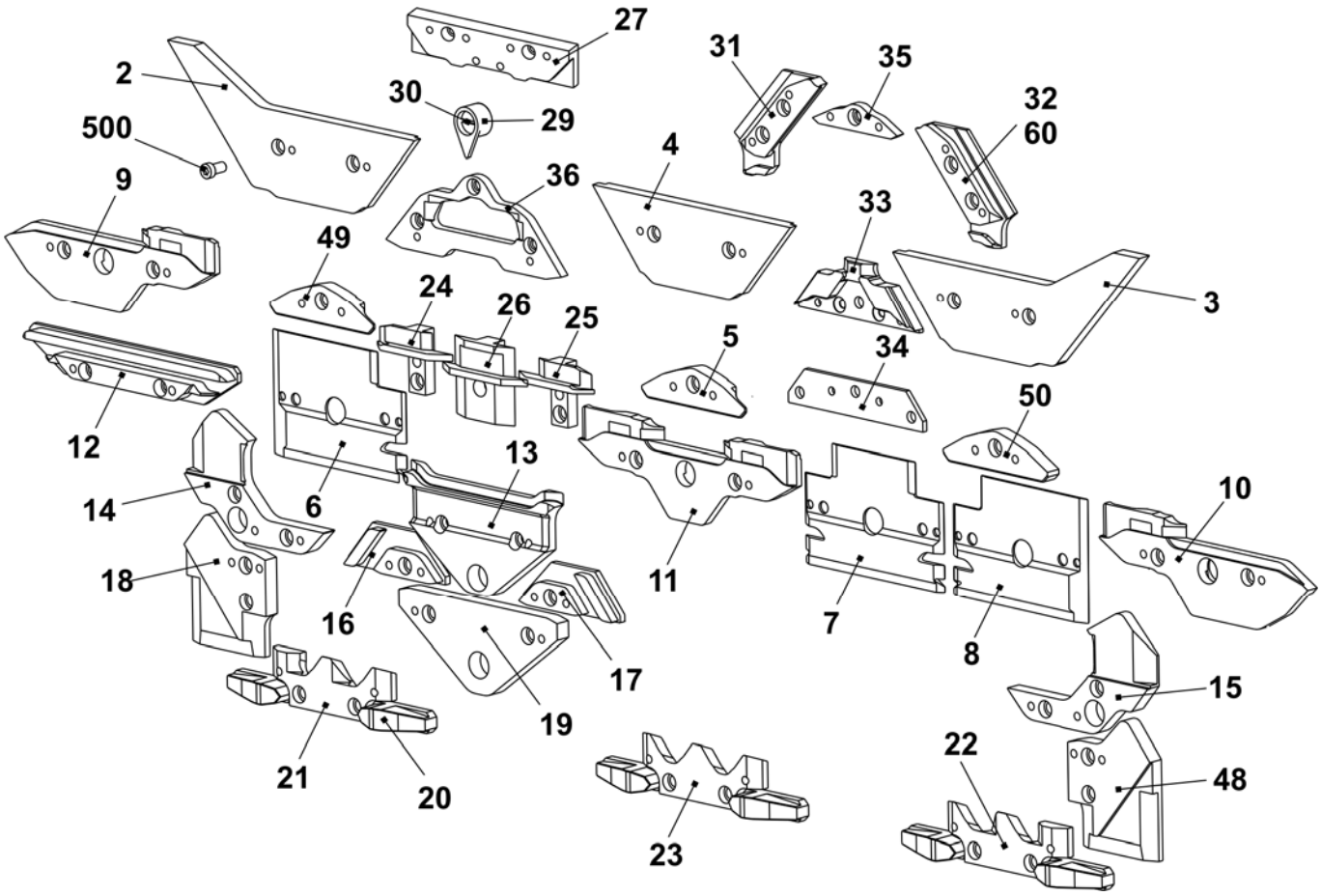

Cam box E6.2 (12m.10)

Pos	*Designation*		*Ident No*	*Pos*	*Designation*	*Ident No*
Σ	**Cam box set complete E12m.10**		**244 286**	42	Switching piece	240 281
1	Cam plate		241 760	58	Shoulder screw	239 626
37	Stitch forming cam on the right complete E12 – E14		214 088	505	Shim 0.03x12x75	022 828
38	Stitch forming cam on the left complete E12 – E14		214 089	506	Shim 0.05x12x75	022 829
39	Rod guide element on the left		211 165	507	Shim 0.1x12x75	022 830
40	Rod guide element in the middle		211 166	508	Shim 0.2x12x75	022 831
41	Rod guide element on the right		211 168	509	Countersunk screw M3x4	023 142
	402	Spring rod	209 791			
	541	Disc 4.3x7x0.5	022 153			
	542	Circlip 3.2	021 019			
	543	Spring	023 344			

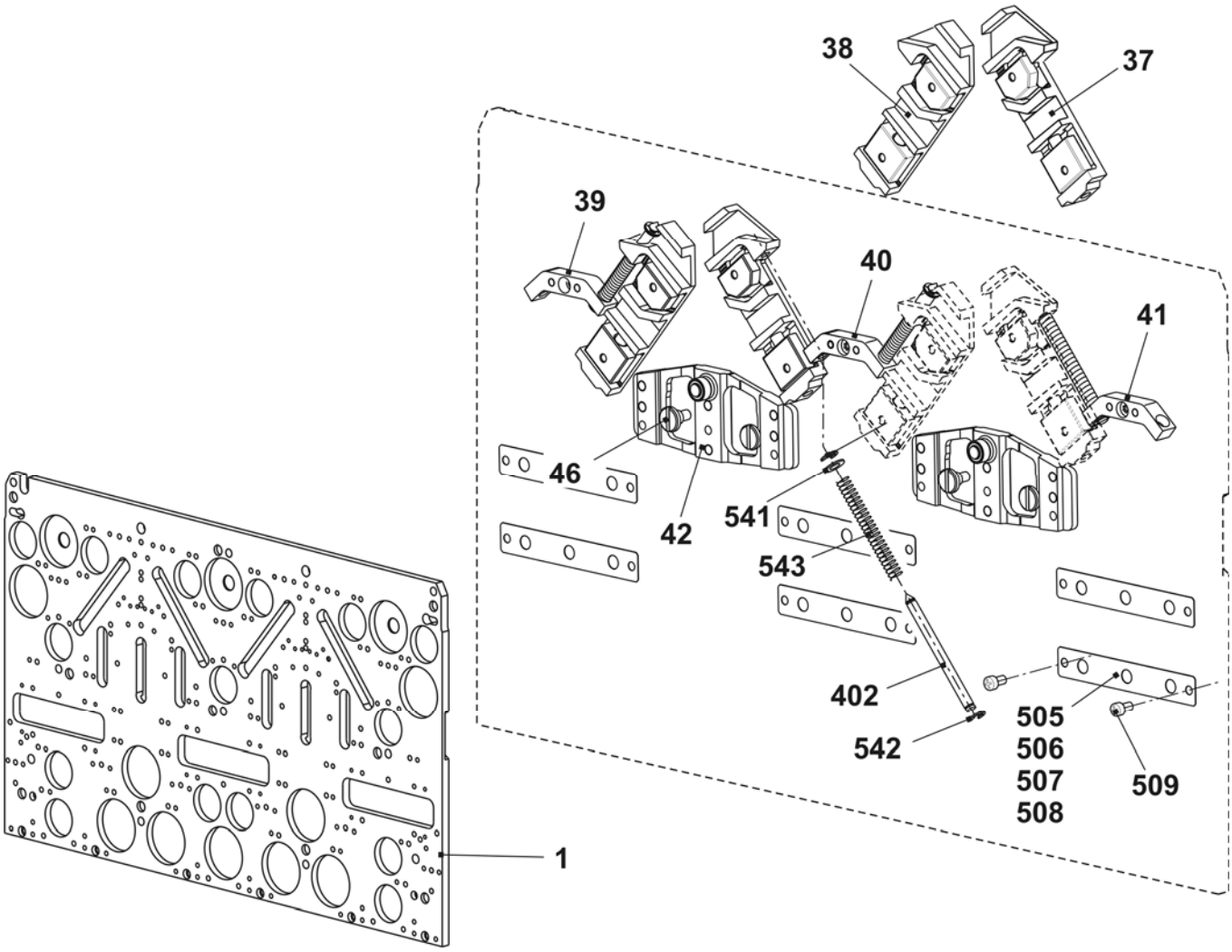

Cam E12m.10

Pos	Designation	Ident No	Pos	Designation	Ident No
2	Entry cam on the left	243 595	23	Selector cam	212 946
3	Entry cam on the right	243 597	24	Pressure part take-over on the left	239 848
4	Entry cam at the top	243 596	25	Pressure part take-over on the right	239 849
5	Entry cam at the bottom - 1.5 E10 - E14	216 328	26	Tuck pressure part	239 621
6	Plate on the left	230 988	27	Limit cam E10	210 611
7	Plate in the middle	231 035	29	Pointer E10 – E14	210 349
8	Plate on the right	231 036	30	Screw	210 335
9	Cam on the left	231 039	31	Stitch cam on the left E10-E14 + E7.2	236 318
10	Cam on the right	231 041	32	Stitch cam on the right E10-E14 + E7.2	236 319
11	Cam in the middle	231 040	33	Tuck limit cam E10 + E7.2	236 345
12	Cam	227 923	34	Raising cam plate E4-12	204 372
13	Cam	210 254	35	Receiving cam E10 - E12	210 595
14	Cam on the left E5-14	212 265	36	Raising cam without split E10 – E12 + E7.2	237 993
15	Cam on the right E5-14	212 266			
16	Cam on the left	236 192		Raising cam with split E10 – E12 + E7.2 Accessory	213 300
17	Cam on the right	236 193			
18	Cam on the left E5-14	212 274	48	Cam on the right E5-14	212 275
19	Cam	210 252	49	Entry cam on the left -1.5 E10 - E14	216 329
20	Offering cam	210 185	50	Entry cam on the right -1.5 E10 - E14	216 330
21	Selector cam on the left	212 944	500	Cap screw M4x8	020 091
22	Selector cam on the right	212 947	60	Stitch cam at the rear on the right E10 - E12	236 320

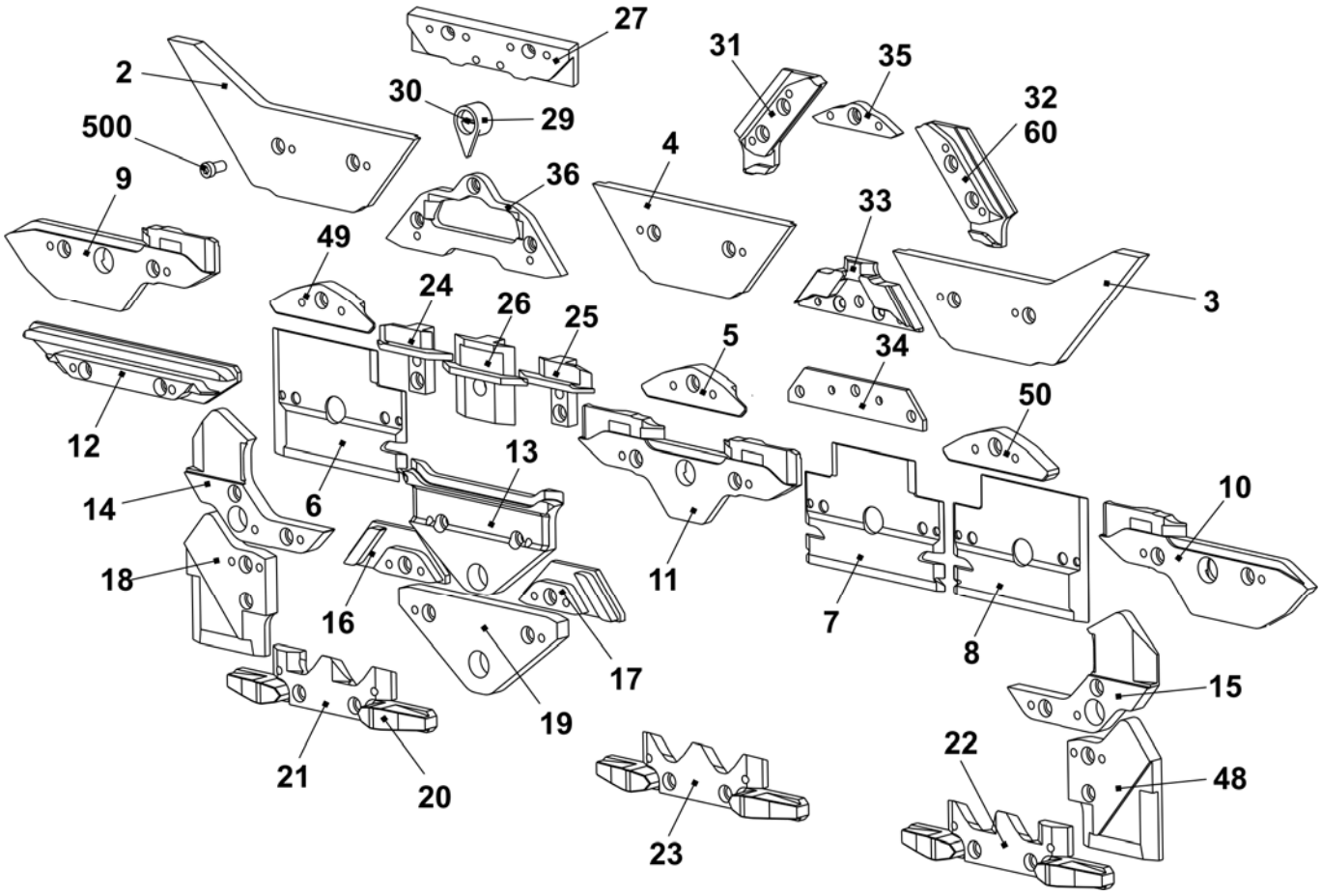

Cam box E14

Pos	Designation		Ident No	Pos	Designation	Ident No
Σ	**Cam box complete E14**		**244 384**	42	Switching piece	240 281
1	Cam plate		241 760	58	Shoulder screw	239 626
37	Stitch forming cam on the right complete E12 – E14		214 088	505	Shim 0.03x12x75	022 828
38	Stitch forming cam on the left complete E12 – E14		214 089	506	Shim 0.05x12x75	022 829
39	Rod guide element on the left		211 165	507	Shim 0.1x12x75	022 830
40	Rod guide element in the middle		211 166	508	Shim 0.2x12x75	022 831
41	Rod guide element on the right		211 168	509	Countersunk screw M3x4	023 142
	402	Spring rod	209 791			
	541	Disc 4.3x7x0.5	022 153			
	542	Circlip 3.2	021 019			
	543	Spring	023 344			

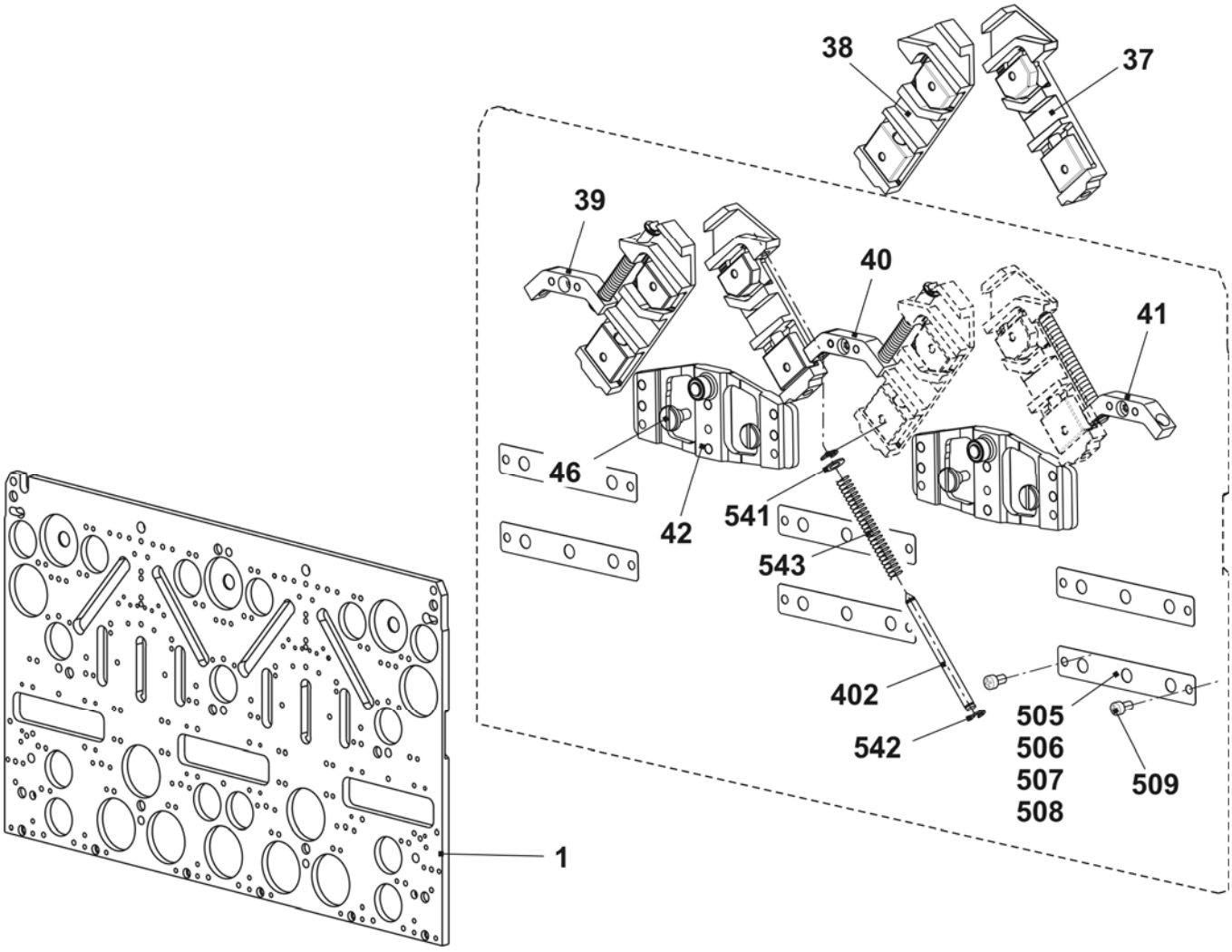

Cams E14

Pos	Designation	Ident No	Pos	Designation	Ident No
2	Entry cam on the left	243 595	23	Selector cam	212 946
3	Entry cam on the right	243 597	24	Pressure part take-over on the left	239 848
4	Entry cam at the top	243 596	25	Pressure part take-over on the right	239 849
5	Entry cam at the bottom - 1.5 E10 - E14	216 328	26	Tuck pressure part	239 621
6	Plate on the left	230 988	27	Limit cam E12 – E14	210 612
7	Plate in the middle	231 035	29	Pointer E10 – E14	210 349
8	Plate on the right	231 036	30	Screw	210 335
9	Cam on the left	231 039	31	Stitch cam on the left E10-E14 + E7.2	236 318
10	Cam on the right	231 041	32	Stitch cam on the right E10-E14 + E7.2	236 319
11	Cam in the middle	231 040	33	Tuck limit cam E14	236 428
12	Cam	227 923	34	Raising cam plate E4-12	204 372
13	Cam	210 254	35	Receiving cam E14	236 944
14	Cam on the left E5-14	212 265	36	Raising cam without split E14	236 767
15	Cam on the right E5-14	212 266			
16	Cam on the left	236 192		Raising cam with split E14 Accessory	214 212
17	Cam on the right	236 193			
18	Cam on the left E5-14	212 274	48	Cam on the right E5-14	212 275
19	Cam	210 252	49	Entry cam on the left -1.5 E10 - E14	216 329
20	Offering cam	210 185	50	Entry cam on the right -1.5 E10 - E14	216 330
21	Selector cam on the left	212 944	500	Cap screw M4x8	020 091
22	Selector cam on the right	212 947			

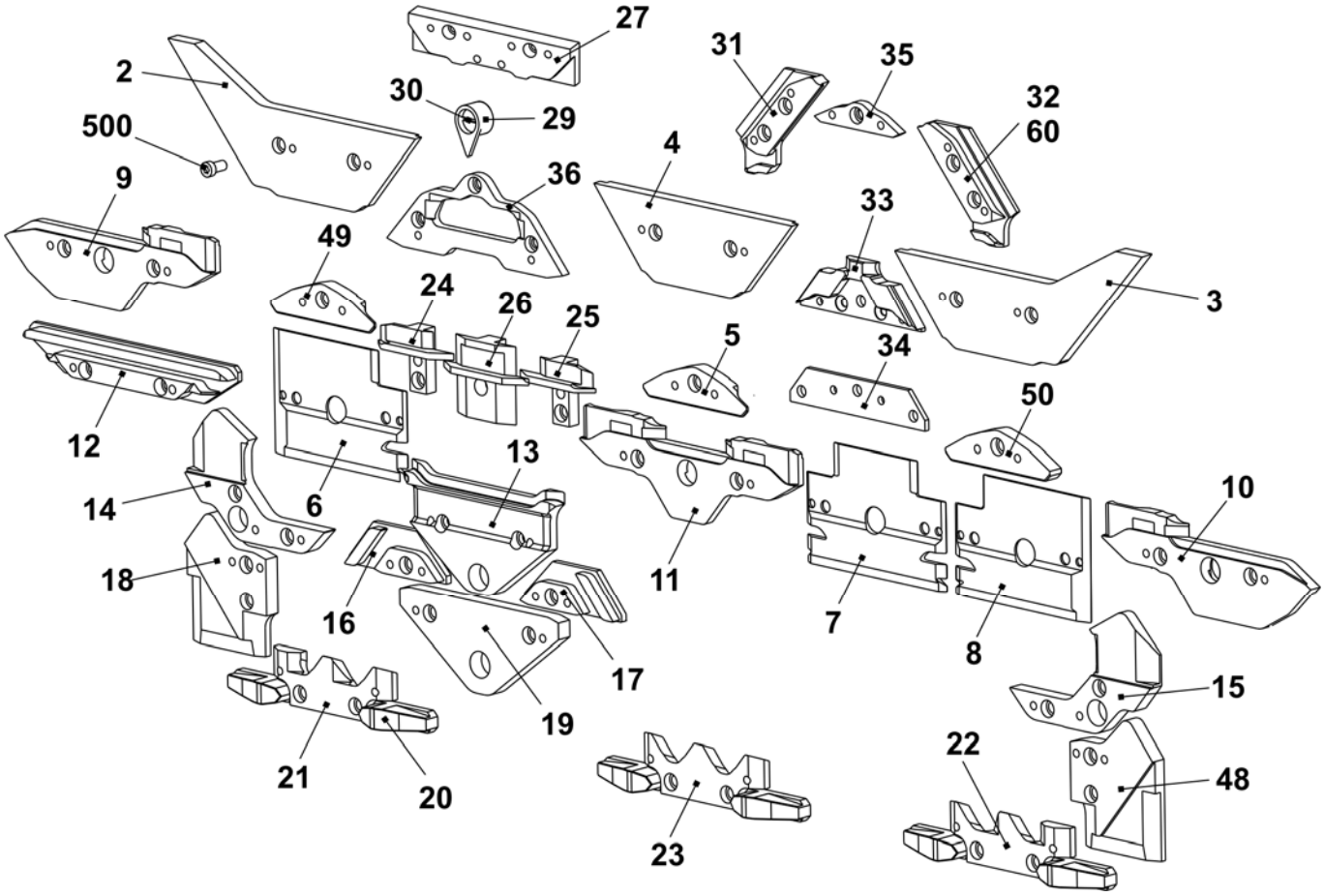

Cam box E7.2 k&w

Pos	*Designation*		*Ident No*	*Pos*	*Designation*	*Ident No*
Σ	**Cam box complete E7.2**		**242 274**	42	Switching piece	240 281
1	Cam plate		241 760	58	Shoulder screw	239 626
37	Stitch forming cam on the right complete E12 – E14		214 088	505	Shim 0.03x12x75	022 828
38	Stitch forming cam on the left complete E12 – E14		214 089	506	Shim 0.05x12x75	022 829
39	Rod guide element on the left		211 165	507	Shim 0.1x12x75	022 830
40	Rod guide element in the middle		211 166	508	Shim 0.2x12x75	022 831
41	Rod guide element on the right		211 168	509	Countersunk screw M3x4	023 142
	402	Spring rod	209 791			
	541	Disc 4.3x7x0.5	022 153			
	542	Circlip 3.2	021 019			
	543	Spring	023 344			

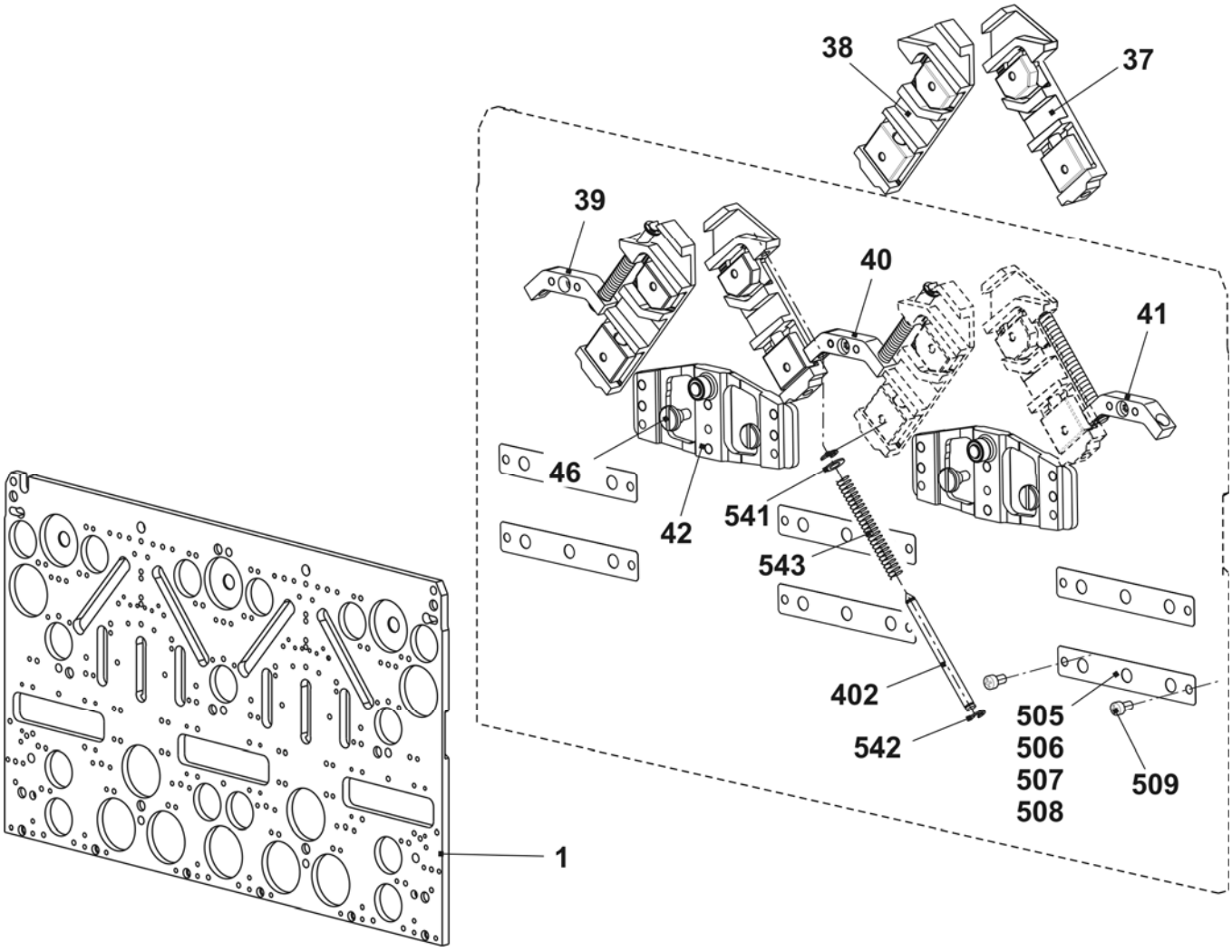

Cam box E7.2 mg

Pos	Designation		Ident No	Pos	Designation	Ident No
Σ	**Cam box complete E7.2**		**243 919**	42	Switching piece	240 281
1	Cam plate		241 760	58	Shoulder screw	239 626
37	Stitch forming cam on the right complete E12 – E14		214 088	505	Shim 0.03x12x75	022 828
38	Stitch forming cam on the left complete E12 – E14		214 089	506	Shim 0.05x12x75	022 829
39	Rod guide element on the left		211 165	507	Shim 0.1x12x75	022 830
40	Rod guide element in the middle		211 166	508	Shim 0.2x12x75	022 831
41	Rod guide element on the right		211 168	509	Countersunk screw M3x4	023 142
	402	Spring rod	209 791			
	541	Disc 4.3x7x0.5	022 153			
	542	Circlip 3.2	021 019			
	543	Spring	023 344			

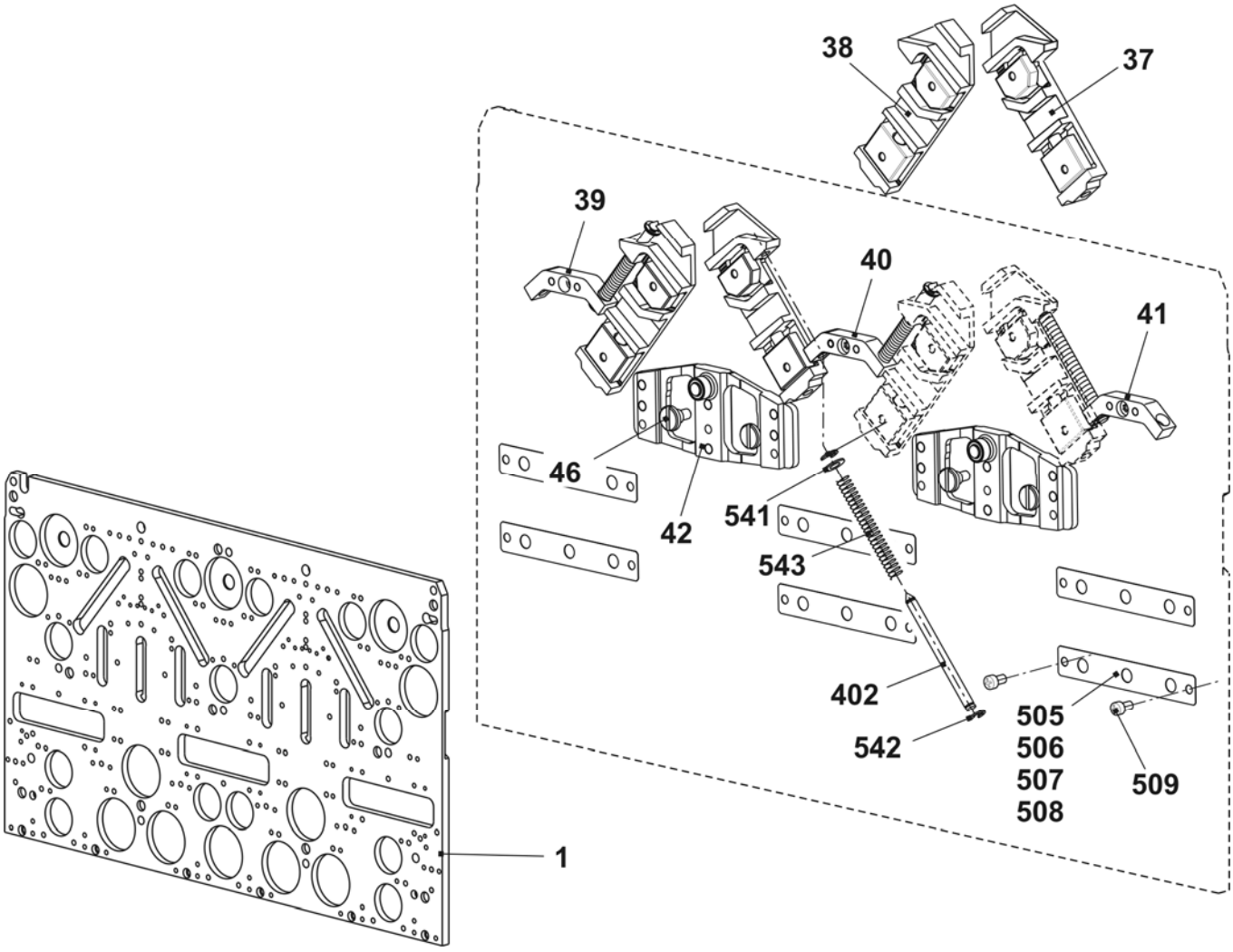

Cams E7.2 mg

Pos	Designation	Ident No	Pos	Designation	Ident No
2	Entry cam on the left	243 595	23	Selector cam	212 946
3	Entry cam on the right	243 597	24	Pressure part take-over on the left	239 848
4	Entry cam at the top	243 596	25	Pressure part take-over on the right	239 849
5	Entry cam at the bottom - 1.5 E10 - E14	216 328	26	Tuck pressure part	239 621
6	Plate on the left	230 988	27	Limit cam E10	210 611
7	Plate in the middle	231 035	29	Pointer E10 – E14	210 349
8	Plate on the right	231 036	30	Screw	210 335
9	Cam on the left	231 039	31	Stitch cam on the left E10-E14 + E7.2	236 318
10	Cam on the right	231 041	32	Stitch cam on the right E10-E14 + E7.2	236 319
11	Cam in the middle	231 040	33	Tuck limit cam E10 + E7.2	236 345
12	Cam	227 923	34	Raising cam plate E4-12	204 372
13	Cam	210 254	35	Receiving cam E10 - E12	210 595
14	Cam on the left E5-14	212 265	36	Raising cam without split E10 – E12 + E7.2	237 993
15	Cam on the right E5-14	212 266			
16	Cam on the left	236 192		Raising cam with split E10 – E12 + E7.2	213 300 Accessory
17	Cam on the right	236 193			
18	Cam on the left E5-14	212 274	48	Cam on the right E5-14	212 275
19	Cam	210 252	49	Entry cam on the left -1.5 E10 - E14	216 329
20	Offering cam	210 185	50	Entry cam on the right -1.5 E10 - E14	216 330
21	Selector cam on the left	212 944	500	Cap screw M4x8	020 091
22	Selector cam on the right	212 947			

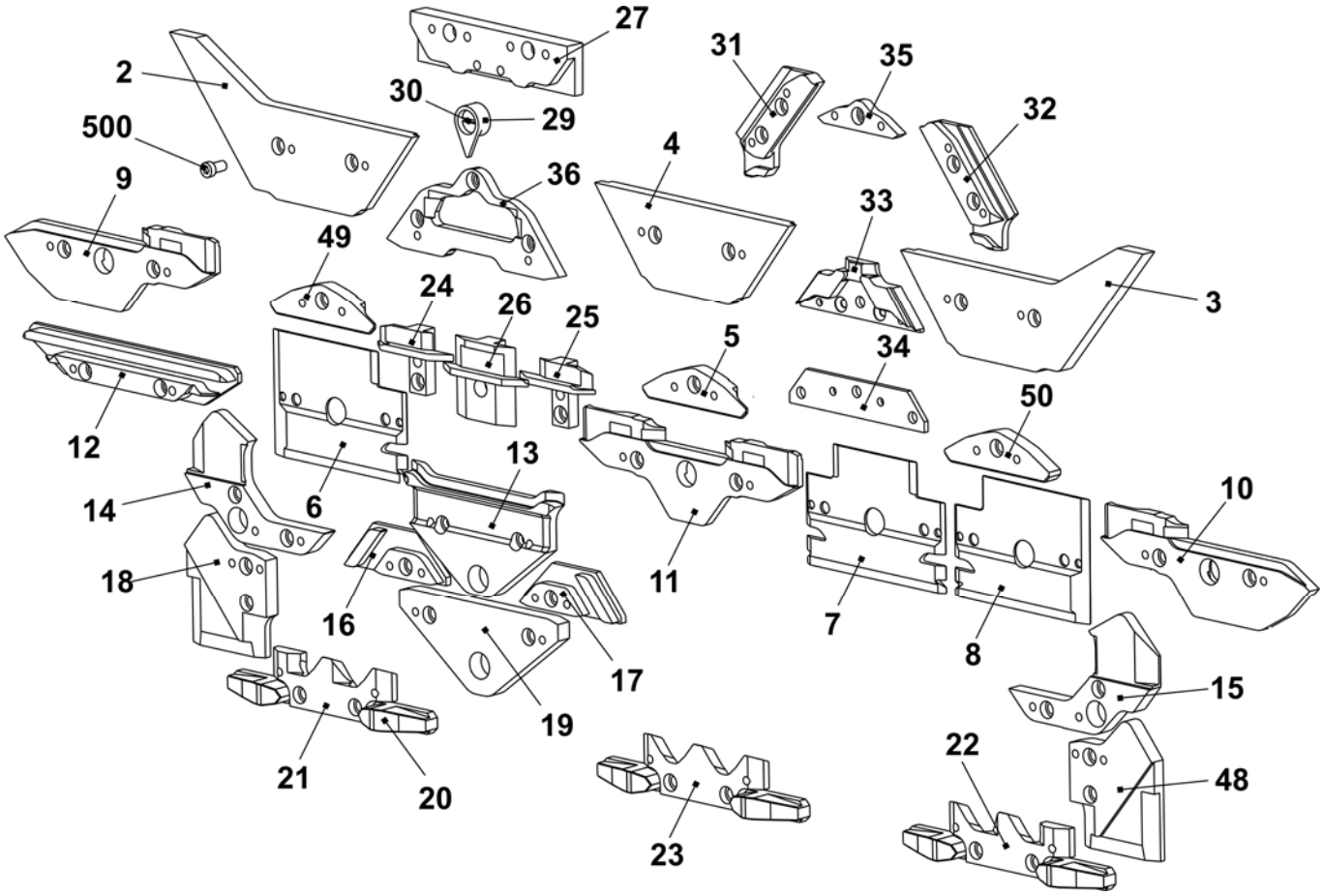

Cam box E16 + E18

Pos	Designation		Ident No	Pos	Designation	Ident No
Σ	**Cam box set complete E16 - E20**		**242 243**	42	Switching piece	240 281
1	Cam plate		241 760	58	Shoulder screw	239 626
37	Stitch forming cam on the right complete E16 - E20		221 123	505	Shim 0.03x12x75	022 828
38	Stitch forming cam on the left complete E16 - E20		221 124	506	Shim 0.05x12x75	022 829
39	Rod guide element on the left		211 165	507	Shim 0.1x12x75	022 830
40	Rod guide element in the middle		211 166	508	Shim 0.2x12x75	022 831
41	Rod guide element on the right		211 168	509	Countersunk screw M3x4	023 142
	402	Spring rod	209 791			
	541	Disc 4.3x7x0.5	022 153			
	542	Circlip 3.2	021 019			
	543	Spring	023 344			

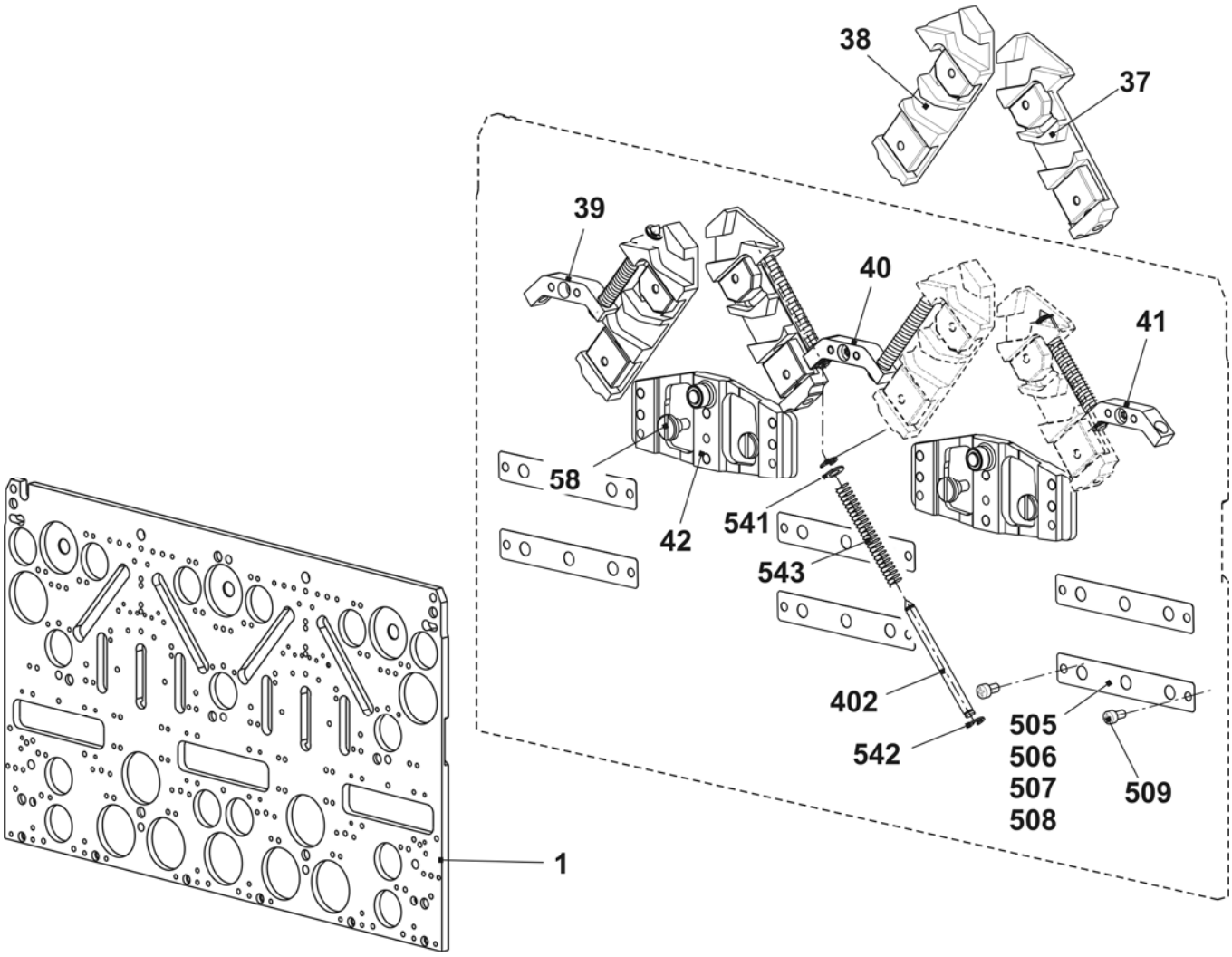

Cams E16 + E18

Pos	Designation	Ident No	Pos	Designation	Ident No
2	Entry cam on the left	243 595	23	Selector cam	212 946
3	Entry cam on the right	243 597	24	Pressure part take-over on the left	239 848
4	Entry cam at the top	243 596	25	Pressure part take-over on the right	239 849
5	Entry cam at the bottom E16 - E20	220 842	26	Tuck pressure part	239 621
6	Plate on the left	230 988	27	Limit cam E16 - E20	220 865
7	Plate in the middle	231 035	29	Pointer E16 - E20	224 383
8	Plate on the right	231 036	30	Screw	210 335
9	Cam on the left	231 039	31	Stitch cam on the left E16 - E20	220 870
10	Cam on the right	231 041	32	Stitch cam on the right E16 - E20	220 871
11	Cam in the middle	231 040	33	Tuck limit cam E16 - E18	239 936
12	Cam	227 923	34	Raising cam plate E4-12	204 372
13	Cam	210 254	35	Receiving cam E16 - E20	220 863
14	Cam on the left E5-14	212 265	36	Raising cam without split E16 - E18 + E9.2	239 457
15	Cam on the right E5-14	212 266			
16	Cam on the left	236 192		Raising cam with split E16 - E18 + E9.2	239 742 Accessory
17	Cam on the right	236 193			
18	Cam on the left E5-14	212 274	48	Cam on the right E5-14	212 275
19	Cam	210 252	49	Entry cam on the left E16 - E20	220 841
20	Offering cam	210 185	50	Entry cam on the right E16 - E20	220 843
21	Selector cam on the left	212 944	500	Cap screw M4x8	020 091
22	Selector cam on the right	212 947			

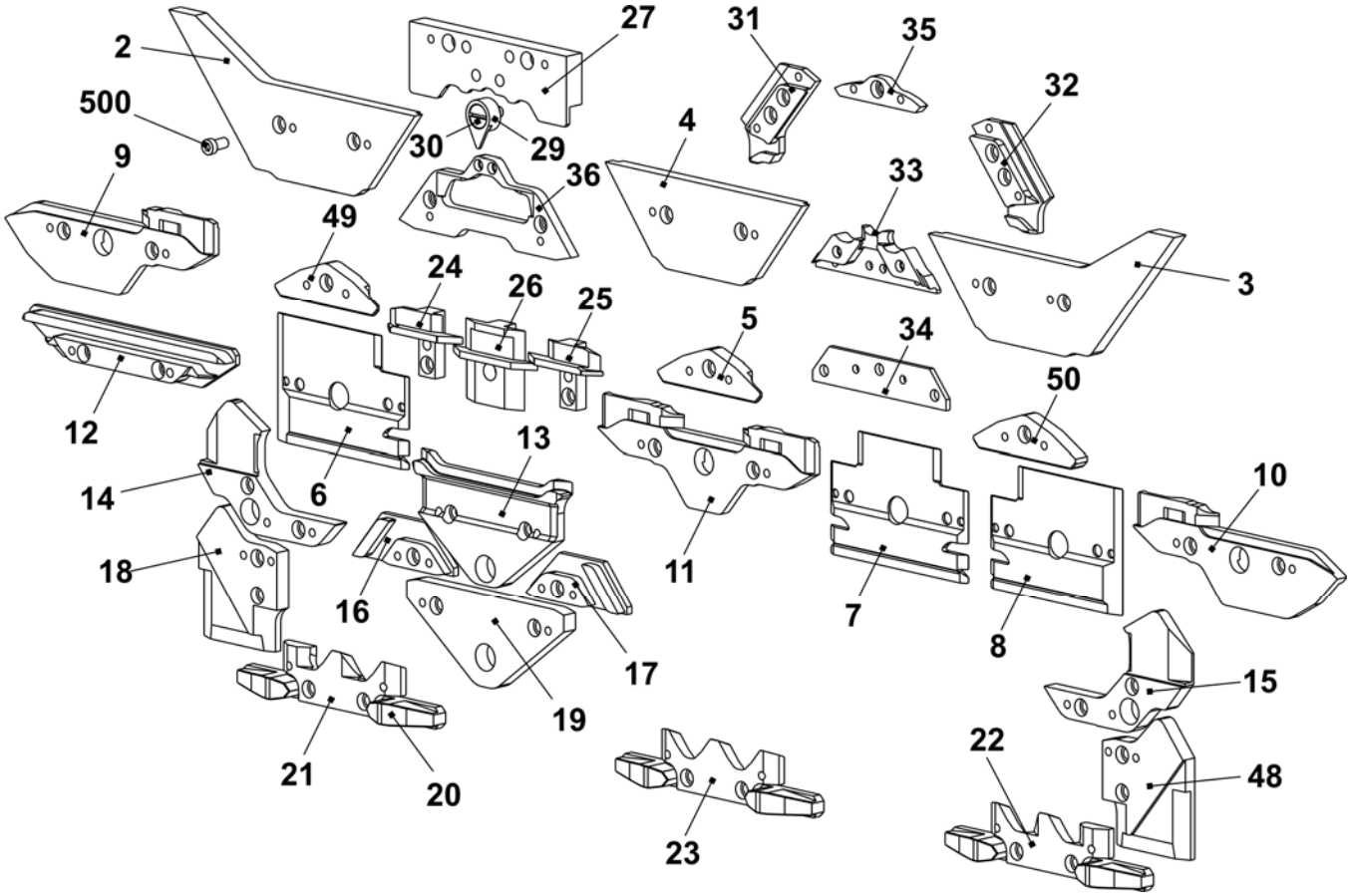

Cam box E8.2 mg

Pos	Designation		Ident No	Pos	Designation	Ident No
Σ	**Cam box set complete E16 - E20**		**243 920**	42	Switching piece	240 281
1	Cam plate		241 760	58	Shoulder screw	239 626
37	Stitch forming cam on the right complete E16 - E20		221 123	505	Shim 0.03x12x75	022 828
38	Stitch forming cam on the left complete E16 - E20		221 124	506	Shim 0.05x12x75	022 829
39	Rod guide element on the left		211 165	507	Shim 0.1x12x75	022 830
40	Rod guide element in the middle		211 166	508	Shim 0.2x12x75	022 831
41	Rod guide element on the right		211 168	509	Countersunk screw M3x4	023 142
	402	Spring rod	209 791			
	541	Disc 4.3x7x0.5	022 153			
	542	Circlip 3.2	021 019			
	543	Spring	023 344			

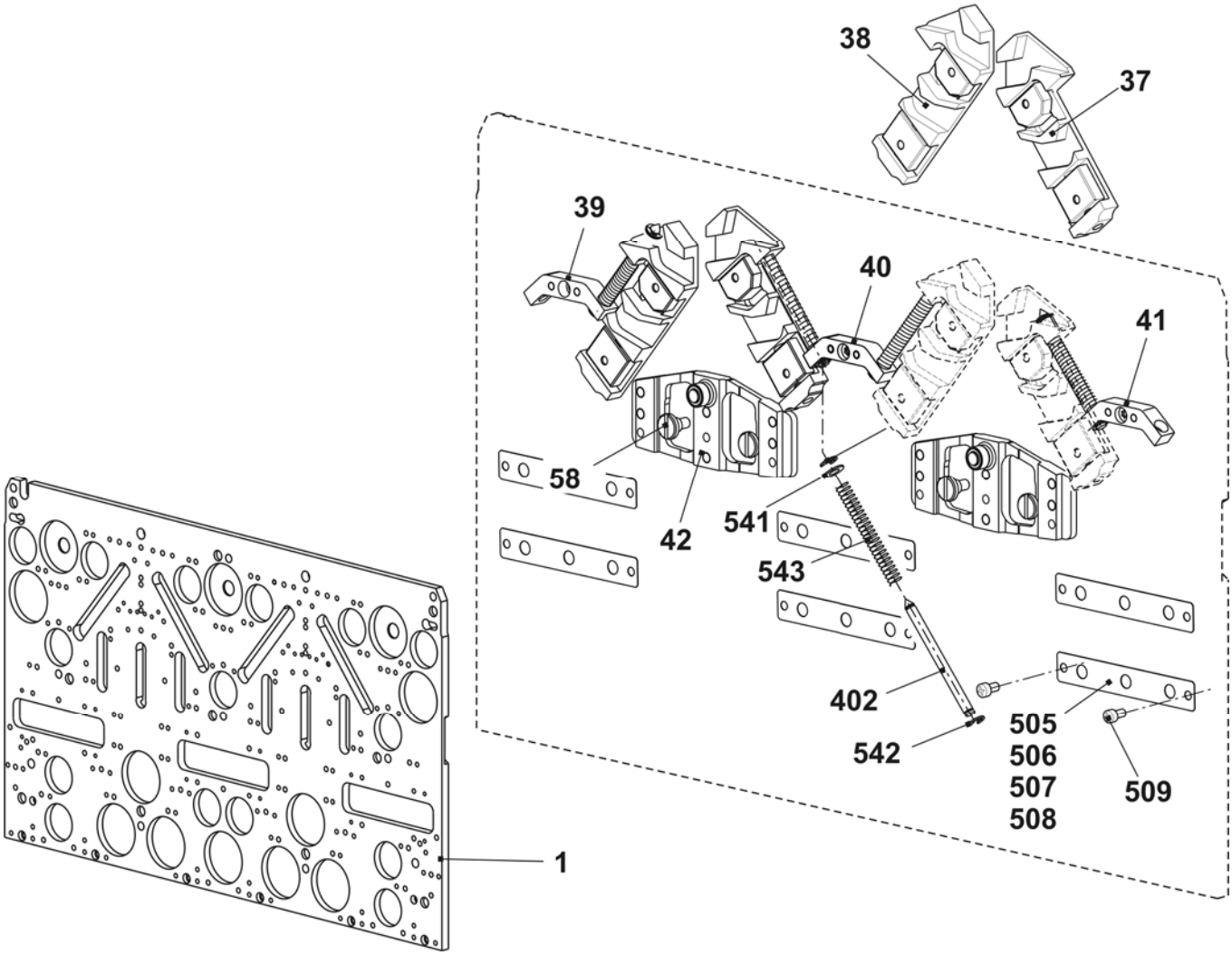

Cams E8.2 mg

Pos	Designation	Ident No	Pos	Designation	Ident No
2	Entry cam on the left	243 595	23	Selector cam	212 946
3	Entry cam on the right	243 597	24	Pressure part take-over on the left	239 848
4	Entry cam at the top	243 596	25	Pressure part take-over on the right	239 849
5	Entry cam at the bottom E16 - E20	220 842	26	Tuck pressure part	239 621
6	Plate on the left	230 988	27	Limit cam E9.2	228 978
7	Plate in the middle	231 035	29	Pointer E16 - E20	224 383
8	Plate on the right	231 036	30	Screw	210 335
9	Cam on the left	231 039	31	Stitch cam on the left E16 - E20	220 870
10	Cam on the right	231 041	32	Stitch cam on the right E16 - E20	220 871
11	Cam in the middle	231 040	33	Tuck limit cam E9.2	239 458
12	Cam	227 923	34	Raising cam plate E4-12	204 372
13	Cam	210 254	35	Receiving cam E9.2	228 977
14	Cam on the left E5 - E14	212 265	36	Raising cam without split E16 - E18 + E9.2	239 457
15	Cam on the right E5 - E14	212 266			
16	Cam on the left	236 192		Raising cam with split E16 - E18 + E9.2 Accessories	239 742
17	Cam on the right	236 193			
18	Cam on the left E5 - E14	212 274	48	Cam on the right E5 - E14	212 275
19	Cam	210 252	49	Entry cam on the left E16 - E20	220 841
20	Offering cam	210 185	50	Entry cam on the right E16 - E20	220 843
21	Selector cam on the left	212 944	500	Cap screw M4x8	020 091
22	Selector cam on the right	212 947			

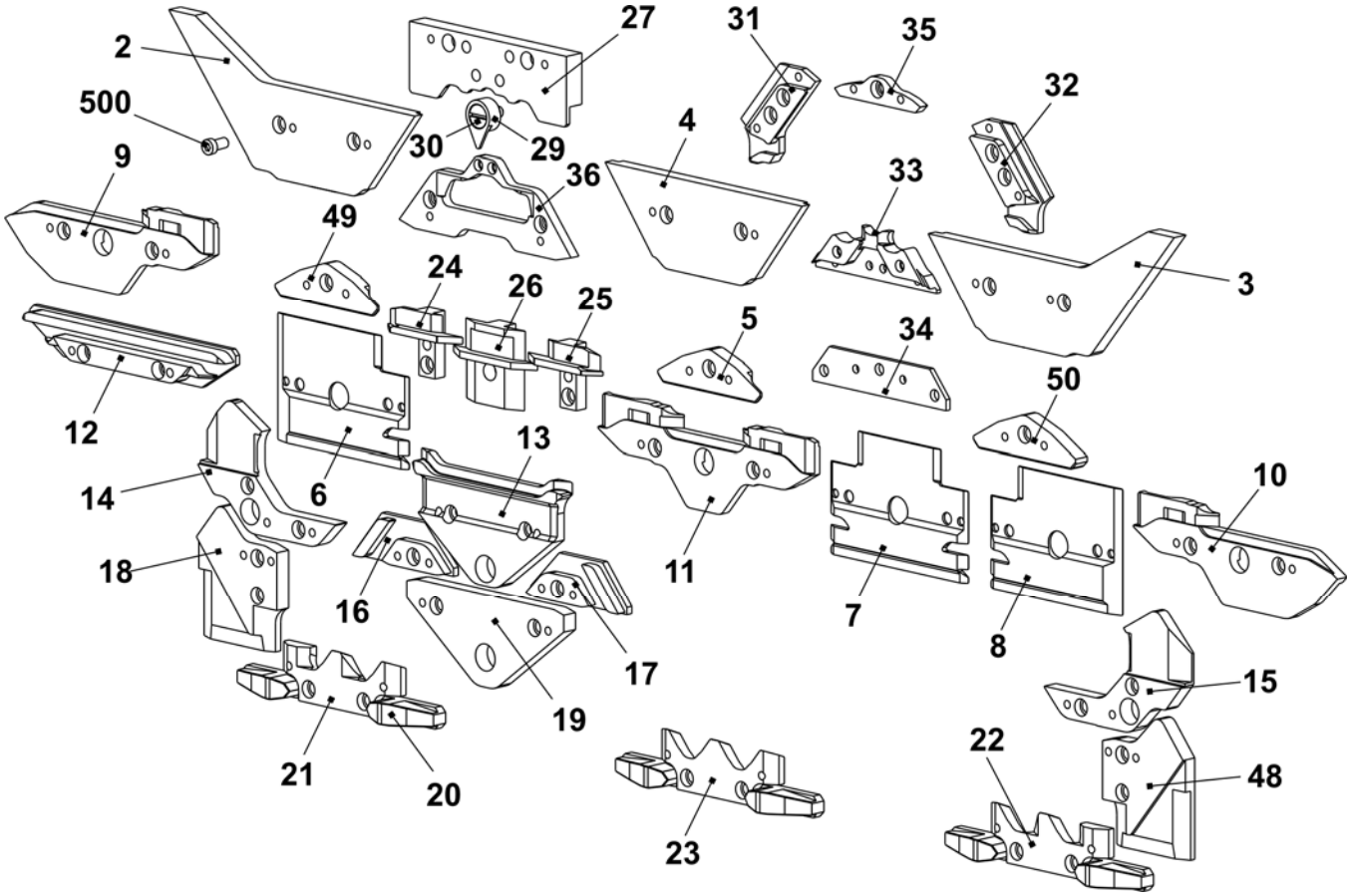

Main take-down

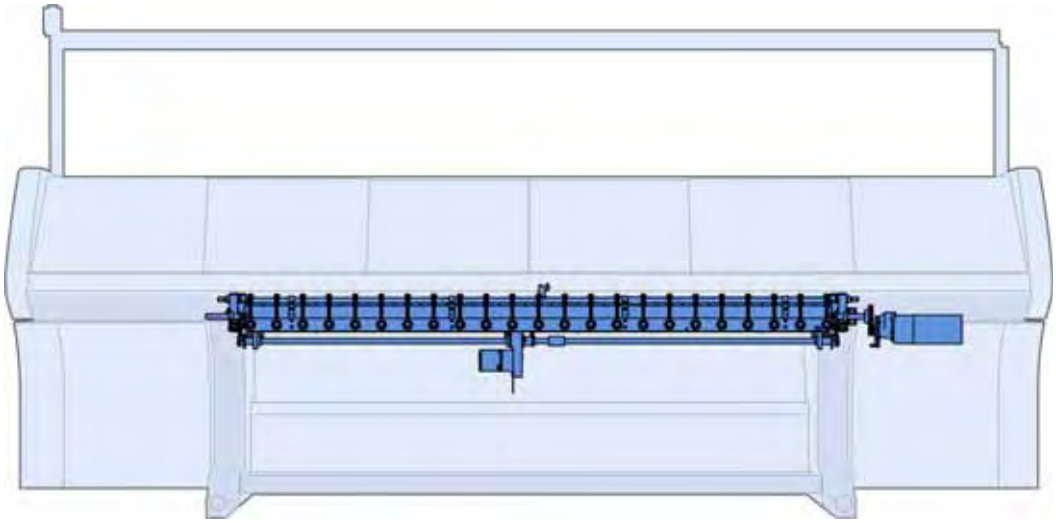

Take-down rollers and left bearing

Pos	Designation	Ident No	Pos	Designation	Ident No
∑	**Main take-down complete**		15	Take-down roller at the front complete	242 371
	E5 - E14	**242 222**	16	Stop point	232 364
	E16 - E18	**242 223**	17	Main take-down on/off complete 84"	237 352
3	Shaft on the left at the rear	237 818	18	Bearing block in the middle complete	237 357
4	Stripper angle at the rear complete	241 935	500	Countersunk screw M5x10	023 247
5	Bolt	208 538	502	Washer 18	023 295
6	Rod	237 192	503	Locking ring 18x1.2	020 955
7	Mounting plate on the left complete	231 725	504	Cap screw M8X25	020 142
9	Swivel-mounted bearing	235 286	505	Washer 8	020 883
11	Floating axle on the left	237 354	506	Cap screw M6x16	020 135
13	Take-down roller at the rear complete		507	Set collar A20	020 938
	E5 - E14 + E2,5.2 - E7.2	243 810	508	Set screw M6x8	022 684
	E16 - E18 + E8.2	243 889			

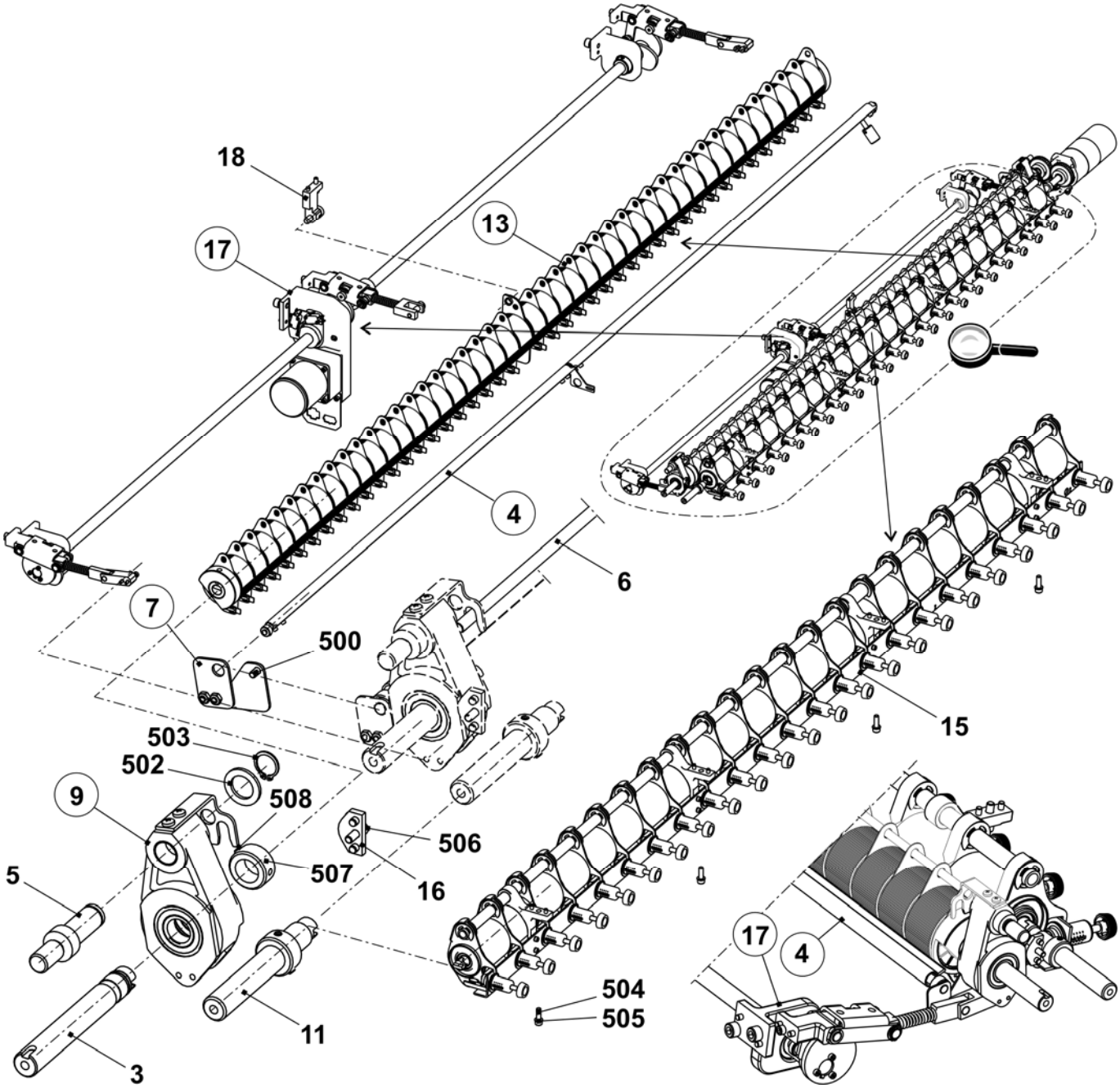

Take-down motor and right bearing

Pos	Designation	Ident No	Pos	Designation	Ident No
1	Clutch set	237 293	501	Hexagon screw M6X16	020 356
8	Mounting plate on the right complete	240 069	502	Washer 18-200	023 295
9	Swivel-mounted bearing	235 286	503	Locking ring 18x1.2	020 955
10	Floating axle on the right	237 353	504	Cap screw M8x25-12.9	020 142
12	Motor take-down + comb	214 279	506	Cap screw M6x16	020 135
14	Flange	241 754	507	Set collar A20	020 938
16	Stop point	232 364	508	Set screw M6x8	022 684
19	Connection cable winding plate OKC	241 703			

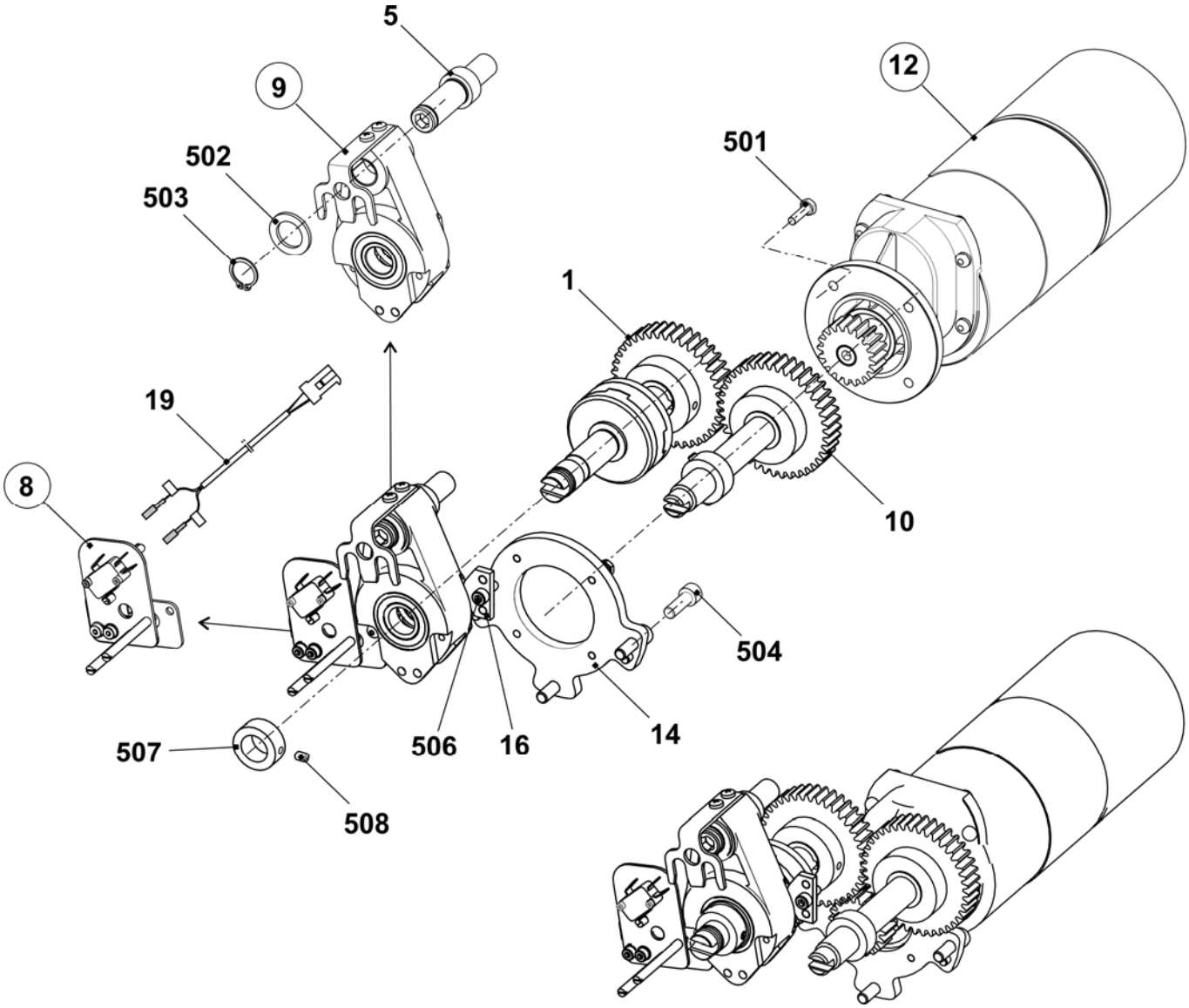

Swivel-mounted bearing

Pos	Designation	Ident No		Pos	Designation	Ident No
Σ	**Swivel-mounted bearing**	**235 286**		502	Locking ring 42x1.75	023 293
1	Lever	232 485		504	Ball bearing 6004-2Z	022 720
2	Sheet metal support	209 393		505	Slide bearing 18x20x15	022 951
500	Countersunk screw M5x8	022 779				

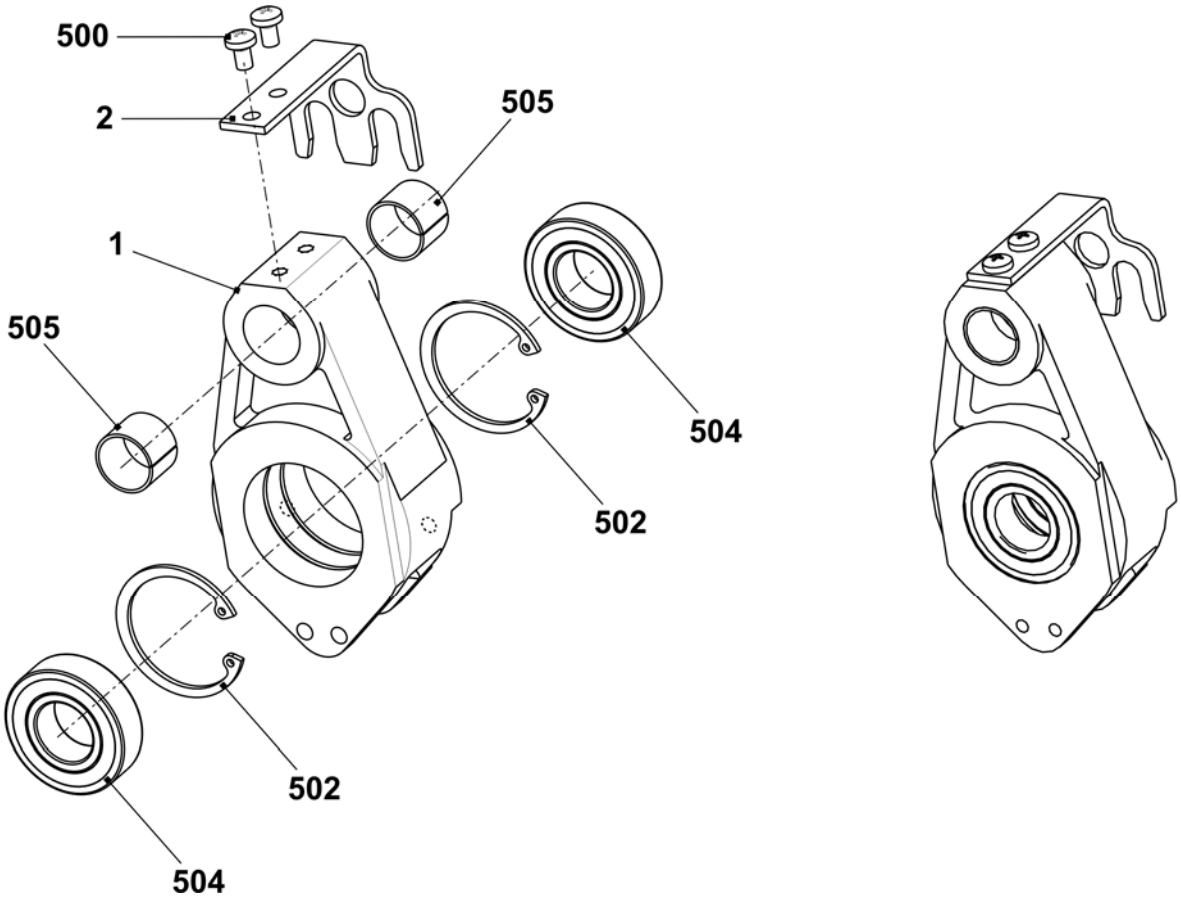

Rear take-down roller

Pos	Designation	Ident No	Pos	Designation	Ident No
Σ	**Take-down roller at the rear complete**		9	Stop ring on the left	222 910
	E5 - E14 + E2,5.2 - E7.2	**243 810**	10	Support	232 578
	E16 - E18 + E8.2	**243 889**		10a Supporting plate	232 512
1	Roller (E5 – E14 + E2,5.2 - E7.2)	206 770		10b Bearing	232 571
	Roller (E16 – E18 + E8.2)	231 400		10c Ring	222 895
2	Stripper	241 612	11	Brush	225 819
3	Shaft	237 190	500	Set screw M10x15-4	020 635
4	Ring on the left	250 573	501	Setting pin 6x32	020 685
5	Ring on the right	250 574	510	Ball bearing 16007	021 697
6	Spacer slide	222 062	511	Slide bearing GFM-101216-06	023 280
7	Stop ring on the left	204 369	512	Slide bearing GFM-101216-09	023 356
8	Spacer slide	240 104			

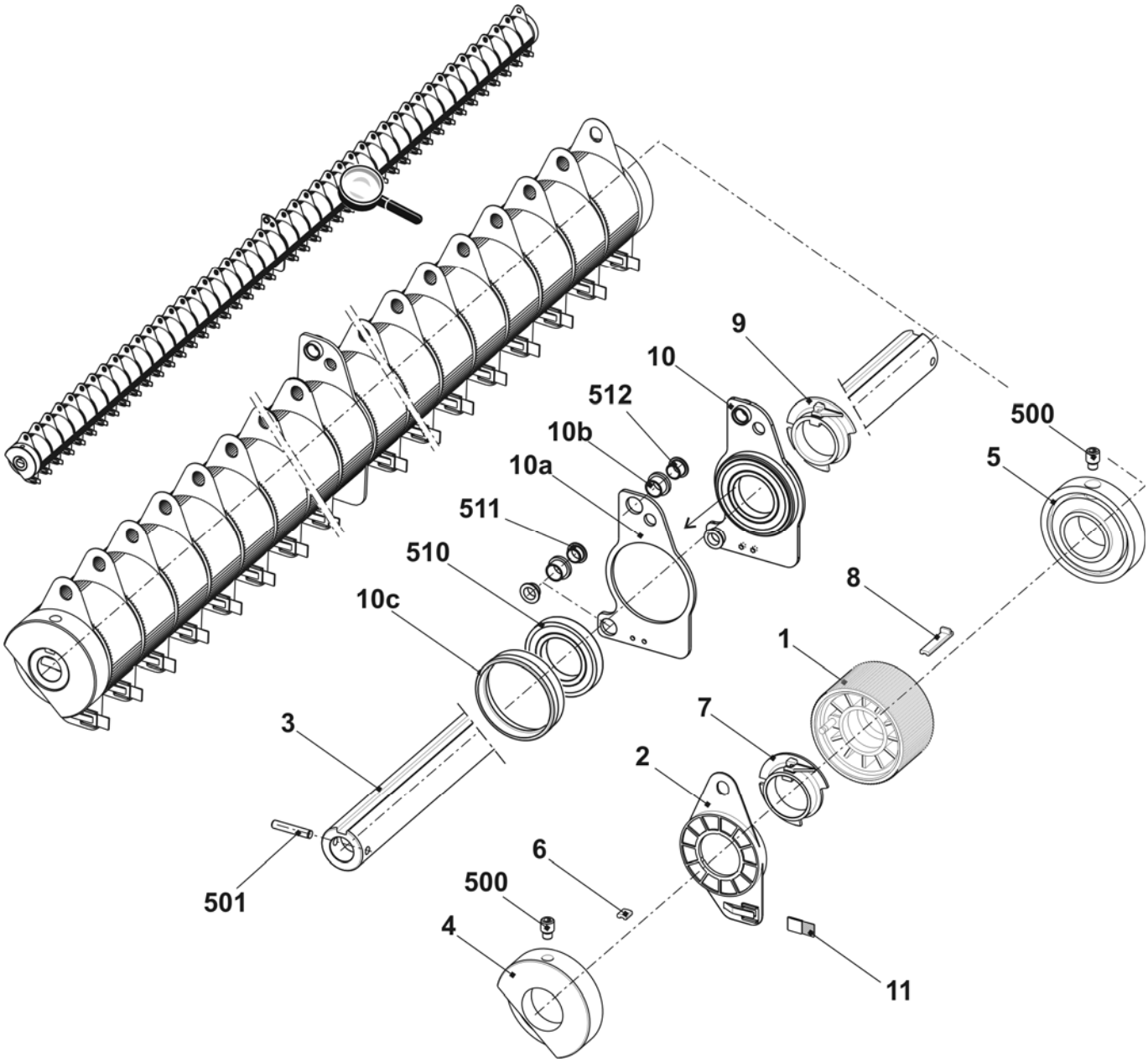

Impulse giver and motor

Pos	Designation	Ident No		Pos	Designation	Ident No
Σ	**Motor take-down unit + comb**	**214 279**		500	Cap screw M4x8	022 501
2	Impulse disc	208 716		504	Washer 4-200	020 879
3	Photoelectric sensor take-down + comb	300 744		506	Circlip	022 774
4	Cover	212 262		507	Shim ring 4x8x1	023 369

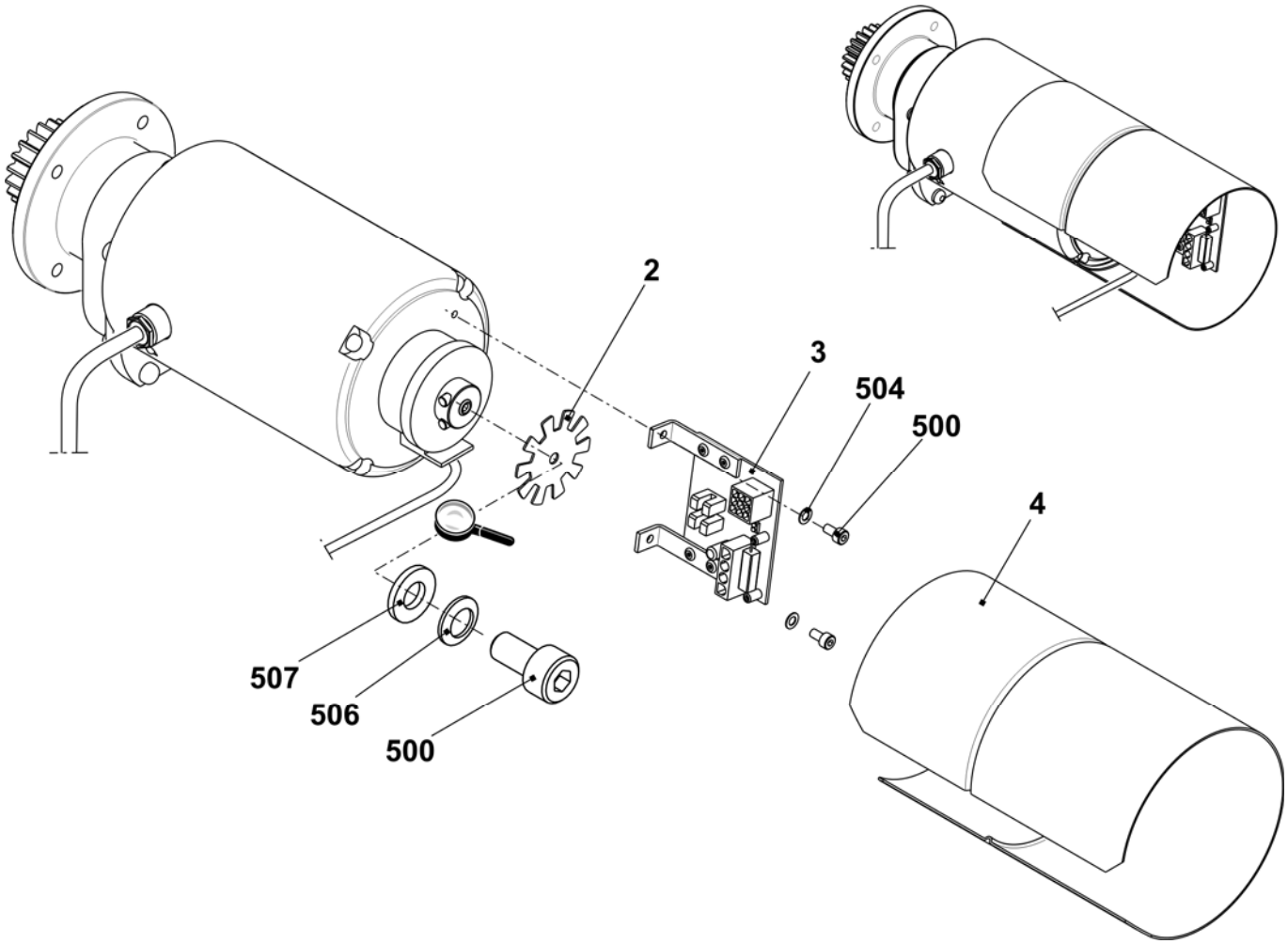

Stripper angle

Pos	Designation	Ident No	Pos	Designation	Ident No
Σ	**Stripper angle at the rear complete**	**241 935**	6	Strap	235 731
1	Stripper angle on the right	241 933	7	Stripper angle on the left	241 934
2	Shaft	240 127	8	Setting weight	229 248
3	Cam	209 278	500	Cap screw M5x8	023 319
4	Bolt	228 310	501	Set collar	020 934
5	Axle	228 803	502	Set screw M5x6	022 738

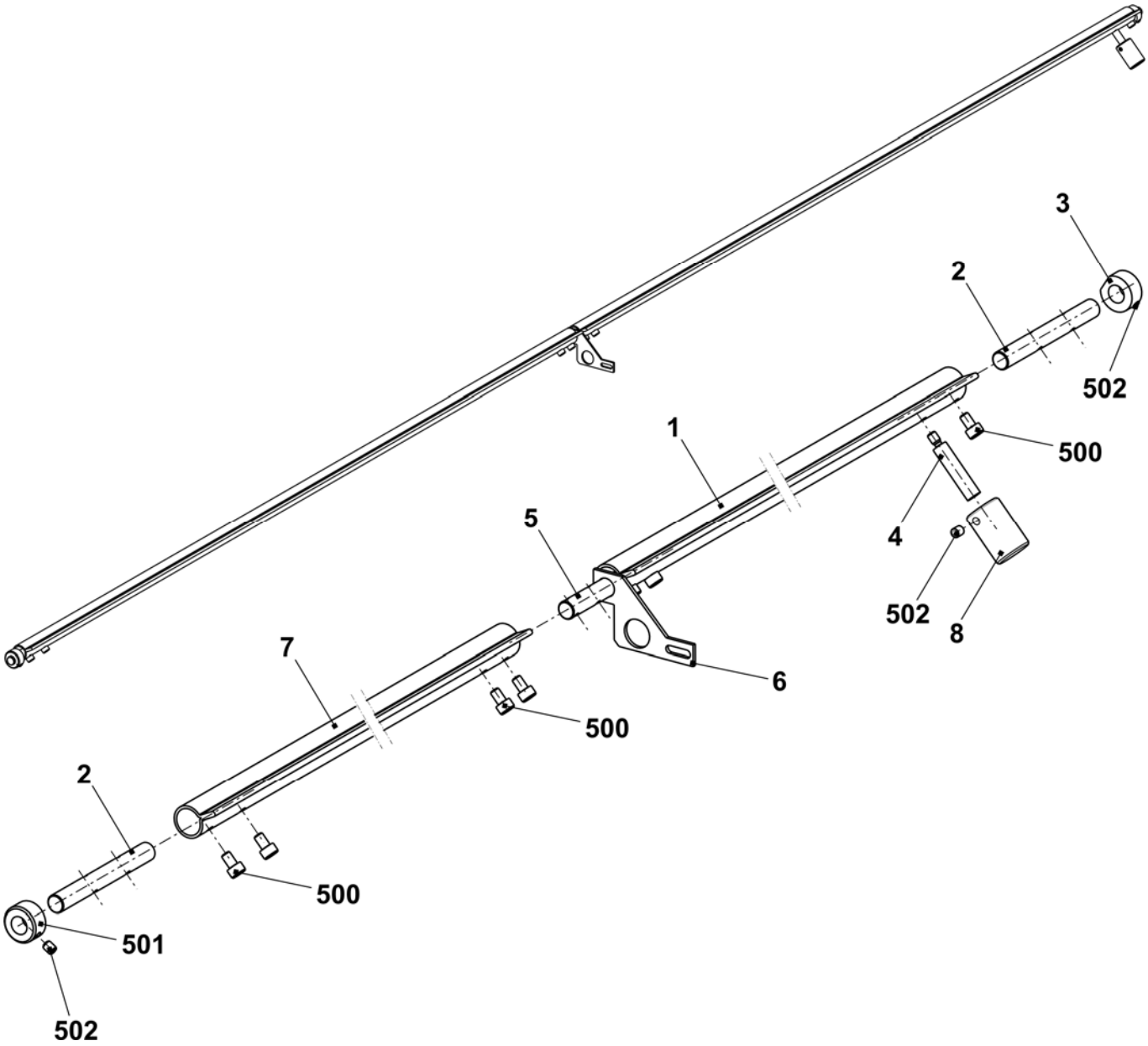

Front take-down roller

Pos	*Designation*	*Ident No*		*Pos*	*Designation*	*Ident No*
Σ	**Take-down roller at the front complete**	**242 371**		4	Fixed piece	221 935
1	Take-down roller at the front	237 313		500	Compression spring 1x10x30	023 741
2	Angle rail complete	242 316		501	Cap screw M5x12	020 132
3	Pressure sleeve	220 911		502	Washer 5-200	020 880

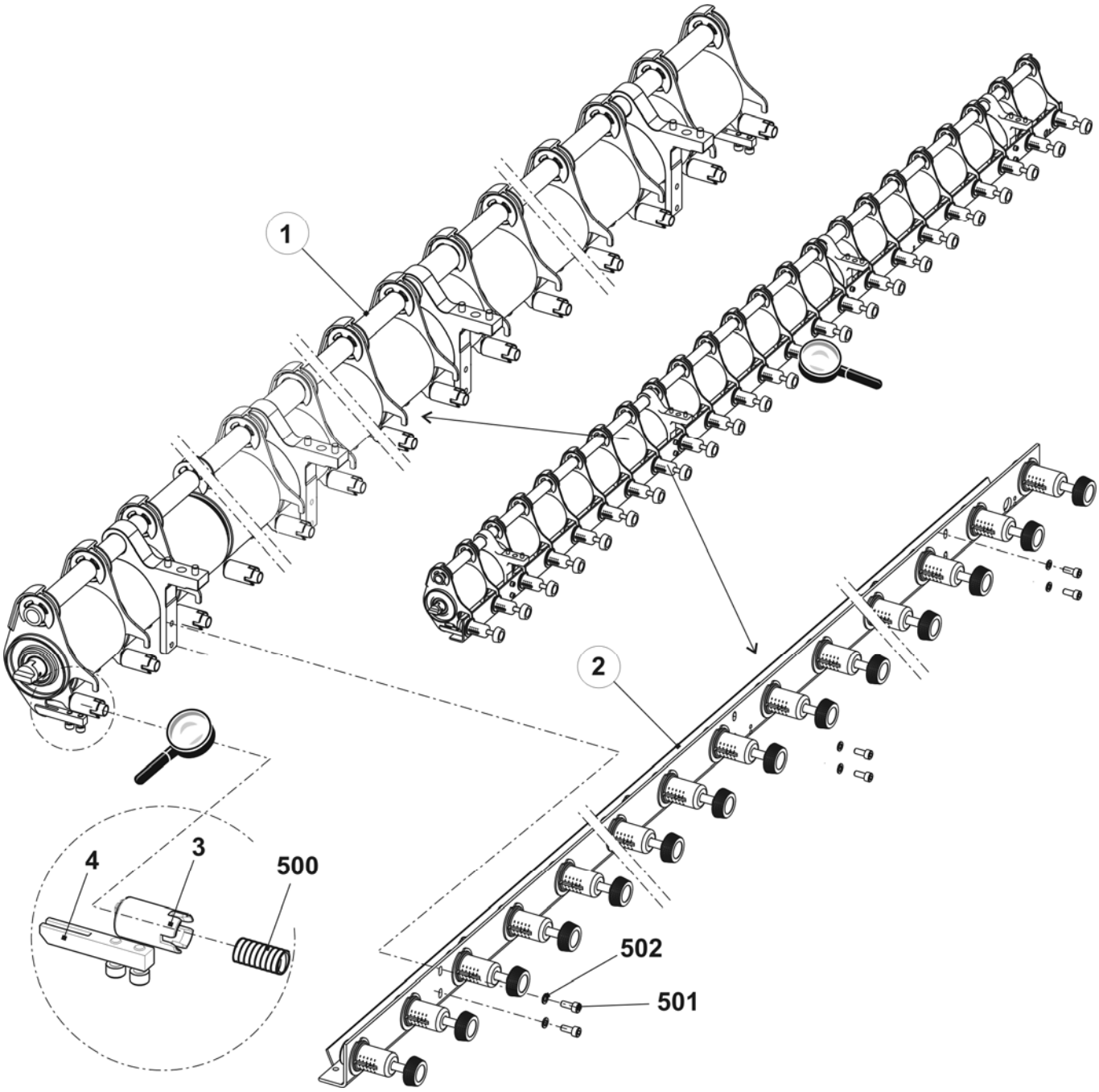

Front roller elements

Pos	Designation		Ident No
Σ	**Take-down roller at the front**		**237 313**
1	Bearing support on the left complete		221 225
	10	Universal joint	221 137
	11	Adaptor	221 132
	12	Bearing support	220 913
	13	Gear wheel	220 910
	510	Cap screw M5x20	020 133
	511	Washer 5-100hv	023 542
	515	Spring dowel sleeve 4x20	023 551
2	Support		221 089
3	Bearing support complete		221 241
	12	Bearing support	220 913
	13	Gear wheel	220 910
	511	Washer 5-100hv	023 542
	512	Cap screw M5x30	022 396

Pos	Designation		Ident No
4	Roller		220 905
5	Tube		237 191
6	Bearing support on the right complete		221 240
	10	Universal joint	221 137
	11	Adaptor	221 132
	12	Bearing support	220 913
	13	Gear wheel	220 910
	510	Cap screw M5x20	020 133
	511	Washer 5-100hv	023 542
	515	Spring dowel sleeve 4x20	023 551
7	Distance pipe on the right		221 920
8	Distance pipe on the left		221 919
500	Circlip		021 025

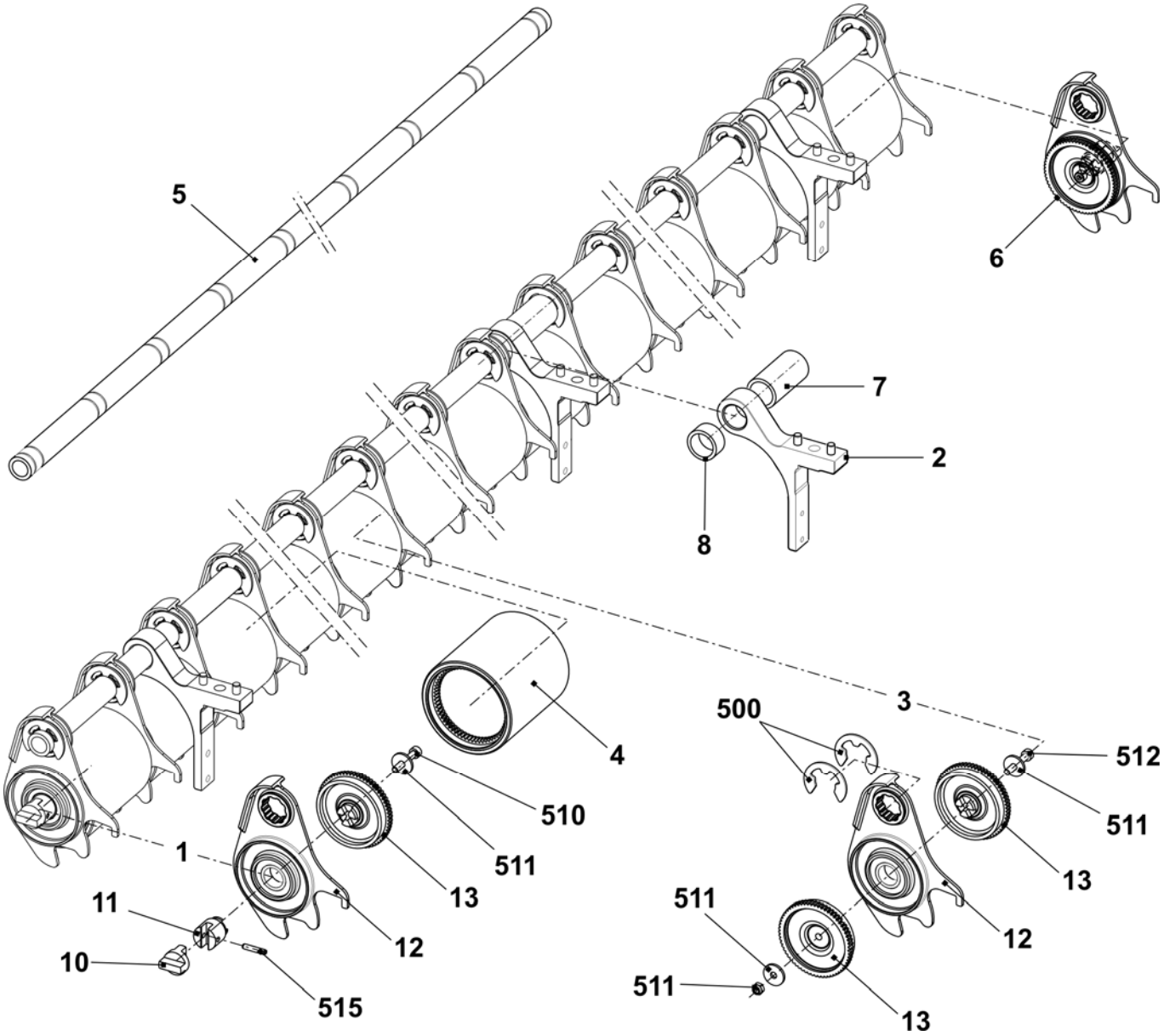

Pressure angle rail

Pos	*Designation*	*Ident No*		*Pos*	*Designation*	*Ident No*
Σ	**Angle rail complete**	**242 316**		500	Washer 6	022 431
1	Switch complete with cable	221 265		501	Hexagon nut M5-8	023 541
2	Spring flange	242 327		502	Compression spring 0.8x9.2x27.5	023 537
3	Angle rail	242 277		503	Cap screw M2x12	023 522
4	Winding plate	237 195		504	Washer 2-200	022 908
5	Locking ring	242 325		505	Shoulder screw M5x20x5	023 675

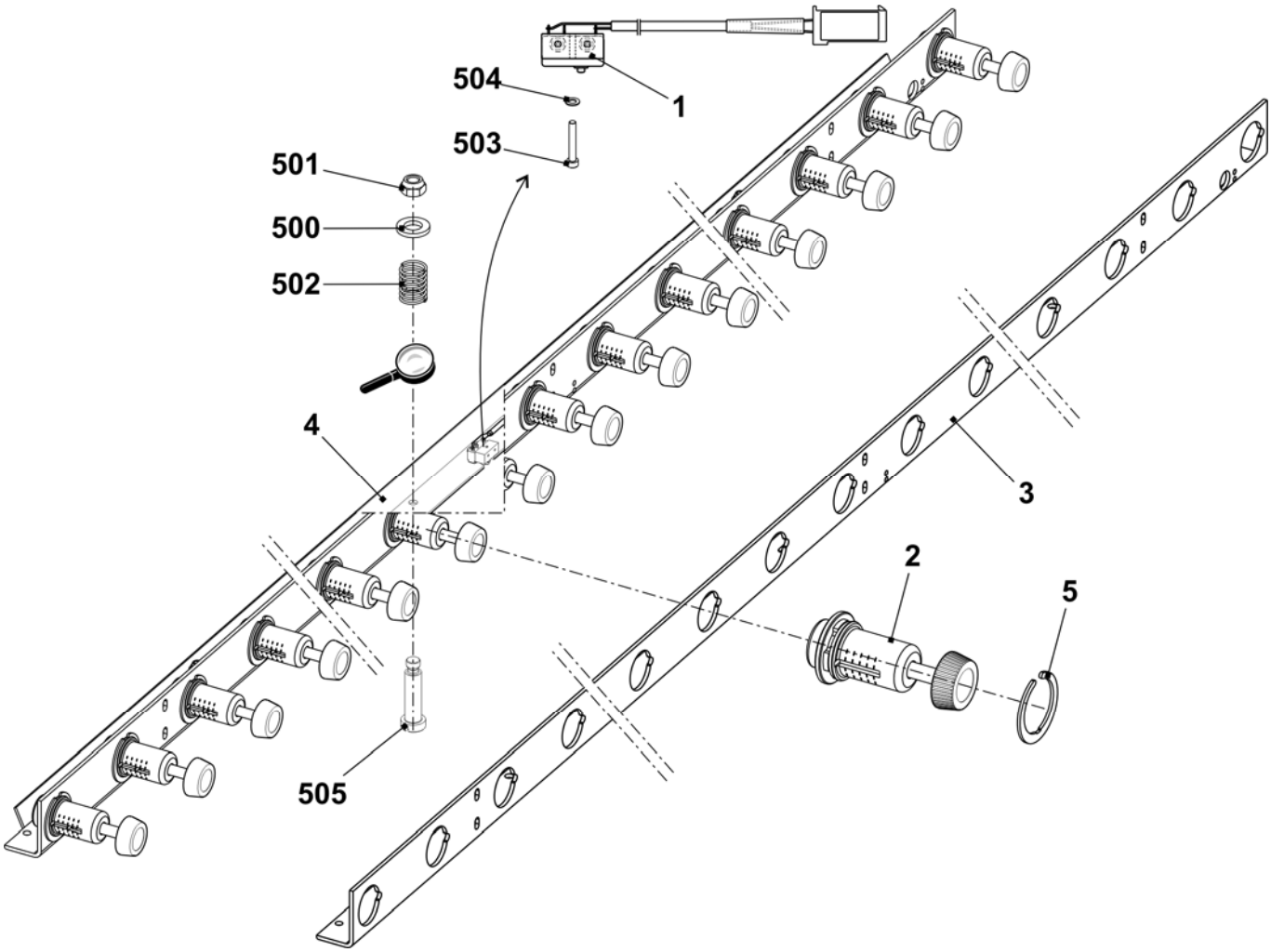

Mounting plate

Pos	Designation	Ident No
Σ L	**Mounting plate on the left complete**	**231 725**
1	Mounting plate on the left	231 541
2	Retaining plate on the left	231 539
500	Countersunk screw M5x10	023 247
501	Serrated lock washer J5.3	022 489

Pos	Designation	Ident No
Σ R	**Mounting plate on the right complete**	**240 069**
1	Mounting plate on the right	240 068
2	Shoulder screw	240 067
3	Retaining plate on the right	240 066
500	Hexagon nut M4-6	022 536
501	Microswitch	026 259
502	Shoulder screw M3x16	022 583
503	Cap screw M5x8	244 278
504	Washer 5-200	020 871

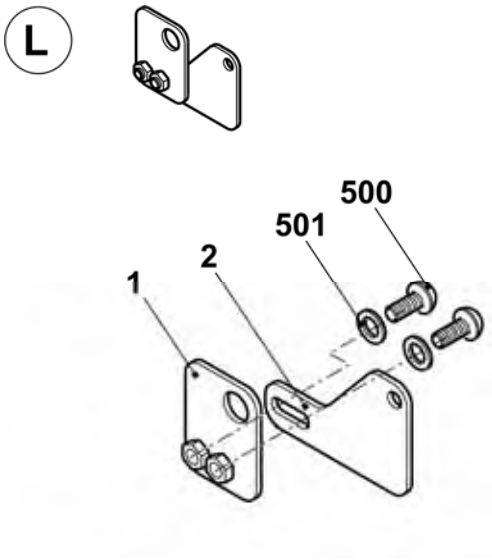

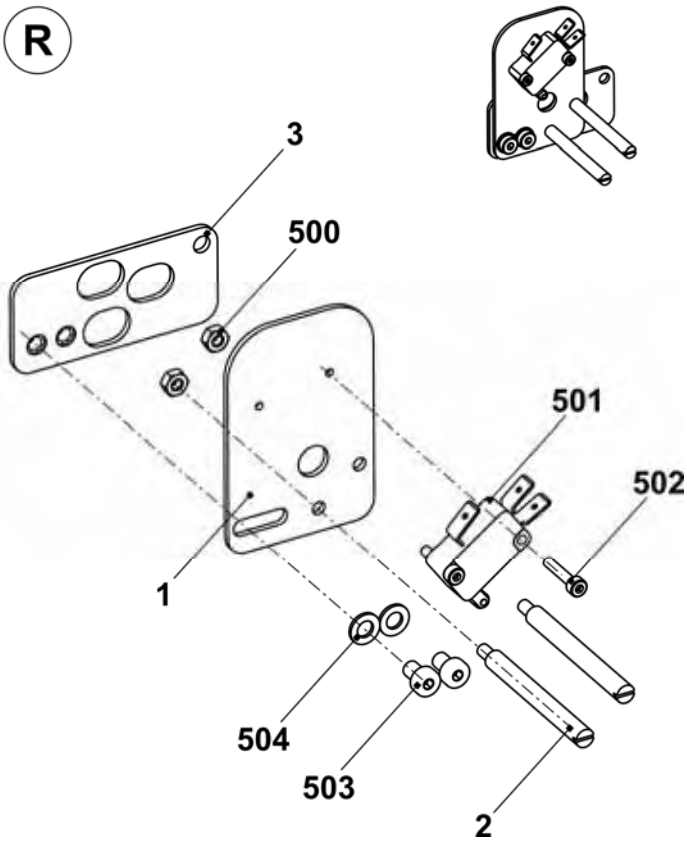

Floating axle

Pos	Designation	Ident No		Pos	Designation	Ident No
Σ L	**Floating axle on the left**	**237 354**		**Σ R**	**Floating axle on the right**	**237 353**
1	Shaft on the left at the front	237 334		1	Shaft on the right at the front	237 340
500	Set collar	020 938		2	Gear wheel z=40, m=2	213 744
501	Set screw M6x8	022 684		500	Set collar	020 938
				501	Set screw M6x8	022 684
				502	Feather key A 6x6x25	023 017

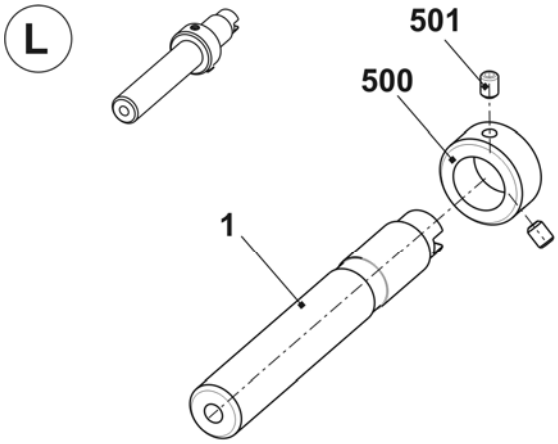

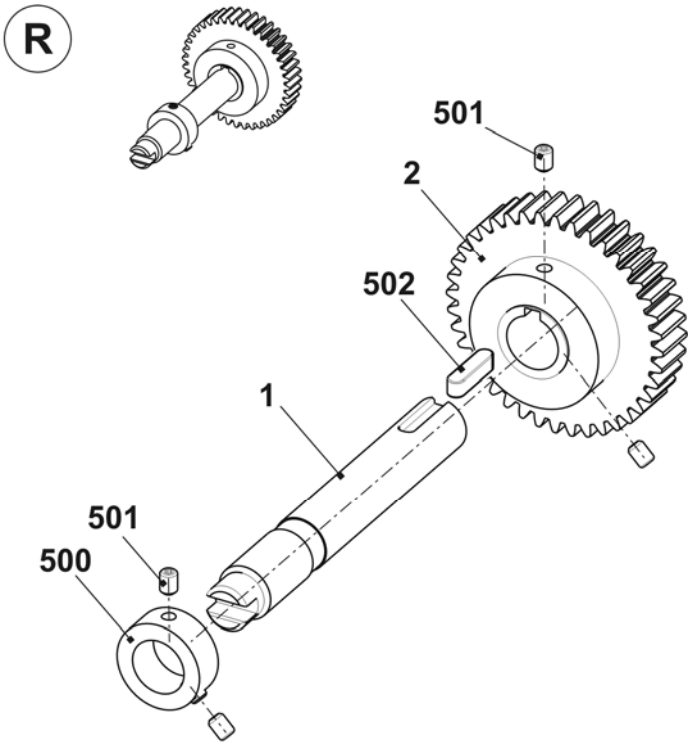

Take-down closing device

Pos	Designation		Ident No	Pos	Designation	Ident No
Σ	**Main take-down on/off complete**		**237 352**	500	Cap screw M5x8	023 319
1	Motor complete		235 246	501	Set screw M4x4	022 875
	1a	Motor 25W	232 456	505	Cap screw M3x15	020 009
	1b	Gear	234 983	506	Assembling element	209 543
2	Sheet metal		232 992	550	Deep groove ball bearing 6004-2Z	022 720
3	Gear wheel		232 434	551	Locking ring 42x1.75	023 293
5	Support in the middle complete		235 247	900	Cap screw M6X14	022 658
12	Microswitch XGK2-S21 250 VAC		210 510	901	Cap screw M10x16	023 895
19	Swivel support on the right complete		239 148	902	Cap screw M6x25	023 746
20	Swivel holder on the left complete		239 189	903	Cap screw M10x25	023 751
21	Swivel holder in the middle complete		239 188	910	Cap screw M5x55	023 321
22	Cable switch HAAB open		232 442			

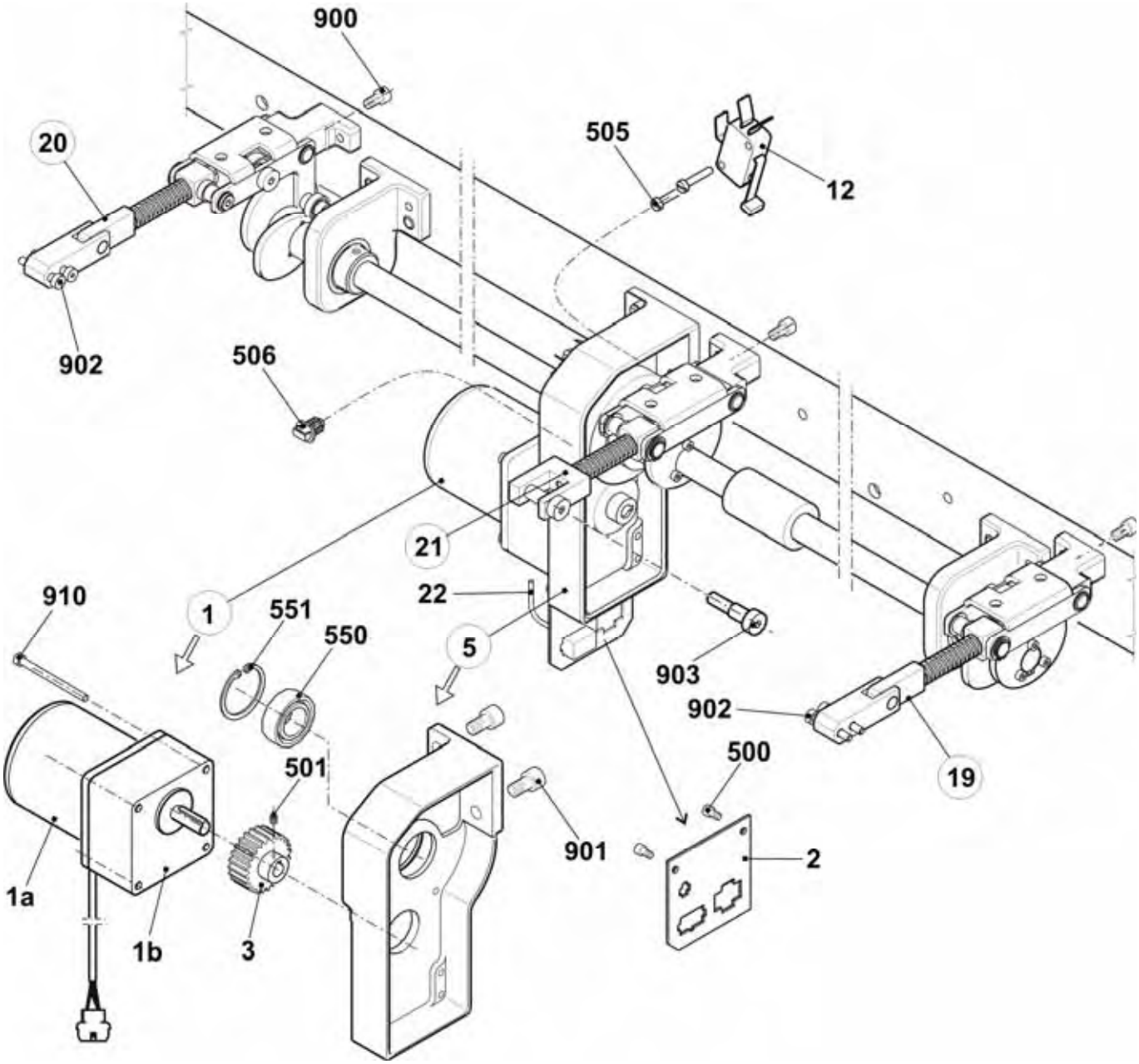

Closer shaft

Pos	Designation	Ident No	Pos	Designation	Ident No
Σ	**Main take-down on/off complete**	**237 352**	16	Guide bush	235 623
4	Gear wheel	213 744	17	Eccentric	232 382
6	Shaft	237 180	18	Distance pipe	235 128
7	Shaft	237 181	502	Feather key A 6x6x25	023 017
8	Spacer	232 385	503	Set screw M6x8	023 723
9	Trip cam	232 383	504	Set screw M6x5	023 192
10	Coupling	232 604	508	Set collar A20	020 938
13	Support on the outside complete	235 248	510	Cap screw M4x25	023 302
	13a Support	234 780	511	Cap screw M4x14	023 604
14	Eccentric	235 135	513	Deep groove ball bearing 6004-2Z	022 720
15	Guide bush	234 876	901	Cap screw M10x16	023 895

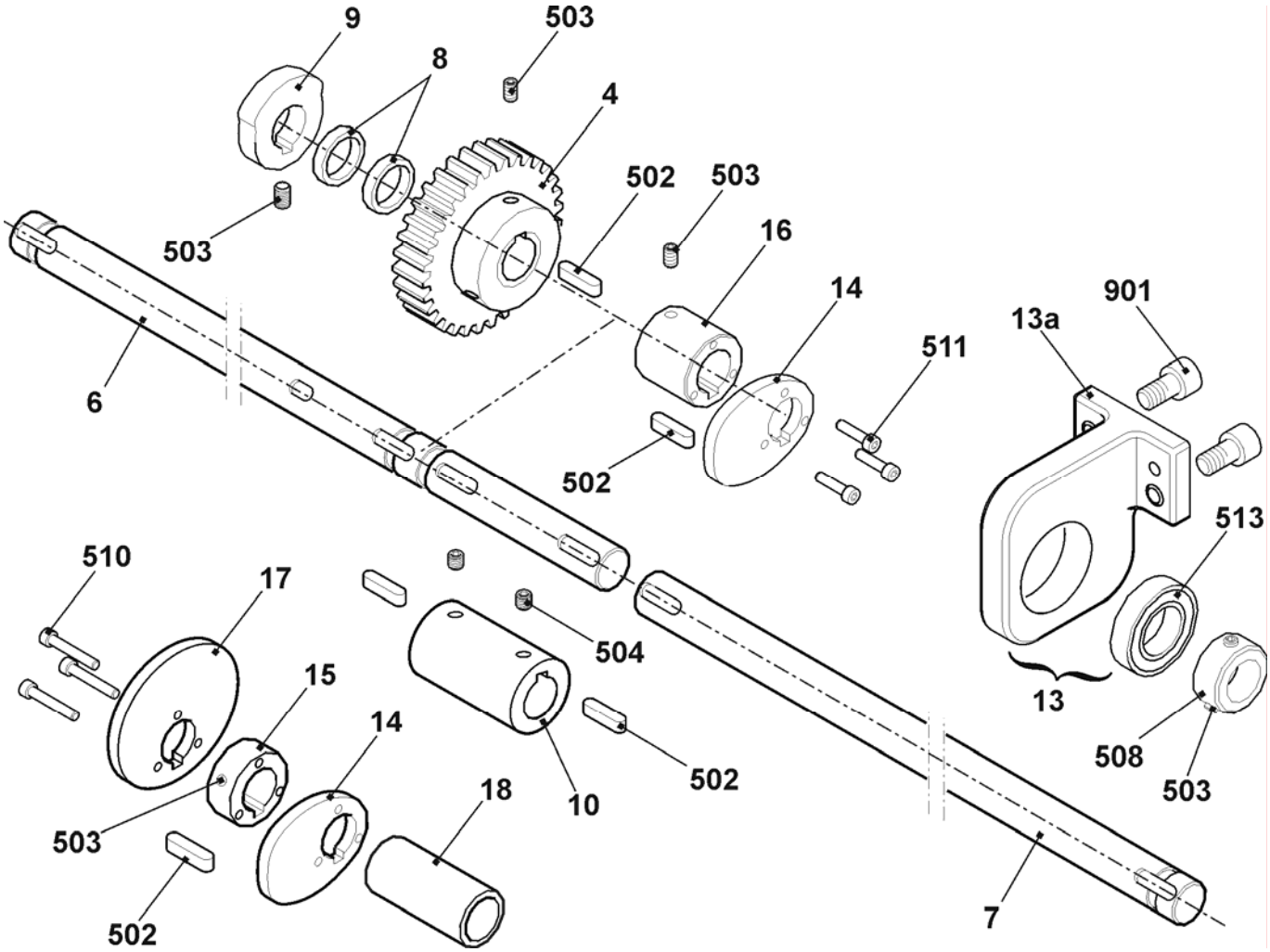

Right swivel support

Pos	Designation	Ident No	Pos	Designation	Ident No
Σ	**Swivel support on the right complete**	**239 148**	11	Lever	238 739
1	Support	239 163	500	Deep groove ball bearing 619/8-2RS	023 728
2	Bearing pin	239 164	501	Deep groove ball bearing 6000-2Z	022 599
3	Bow	238 974	502	Hexagon nut M8-8	022 843
	3a Clip bearing 11-MCM-12-04	023 639	503	Adjusting washer 10x16x2	023 600
4	Shoulder screw	239 133	504	Slide bearing GFM-081014-06	023 358
5	Distance bush	239 134	505	Slide bearing GSM-0810-10	023 896
6	Shoulder screw	239 132	506	Shim ring 12x18x1	023 315
7	Swivel-mounted bearing	239 100	507	Locking ring 12x1	020 951
8	Bearing bolt	239 117	508	Compression spring 2.5x12.5x67.5	023 743
9	Spring mandrel on the inside	232 388	509	Dowel pin 10x20	023 616
10	Lever	238 370	510	Slide bearing GSM-1012-10	239 178

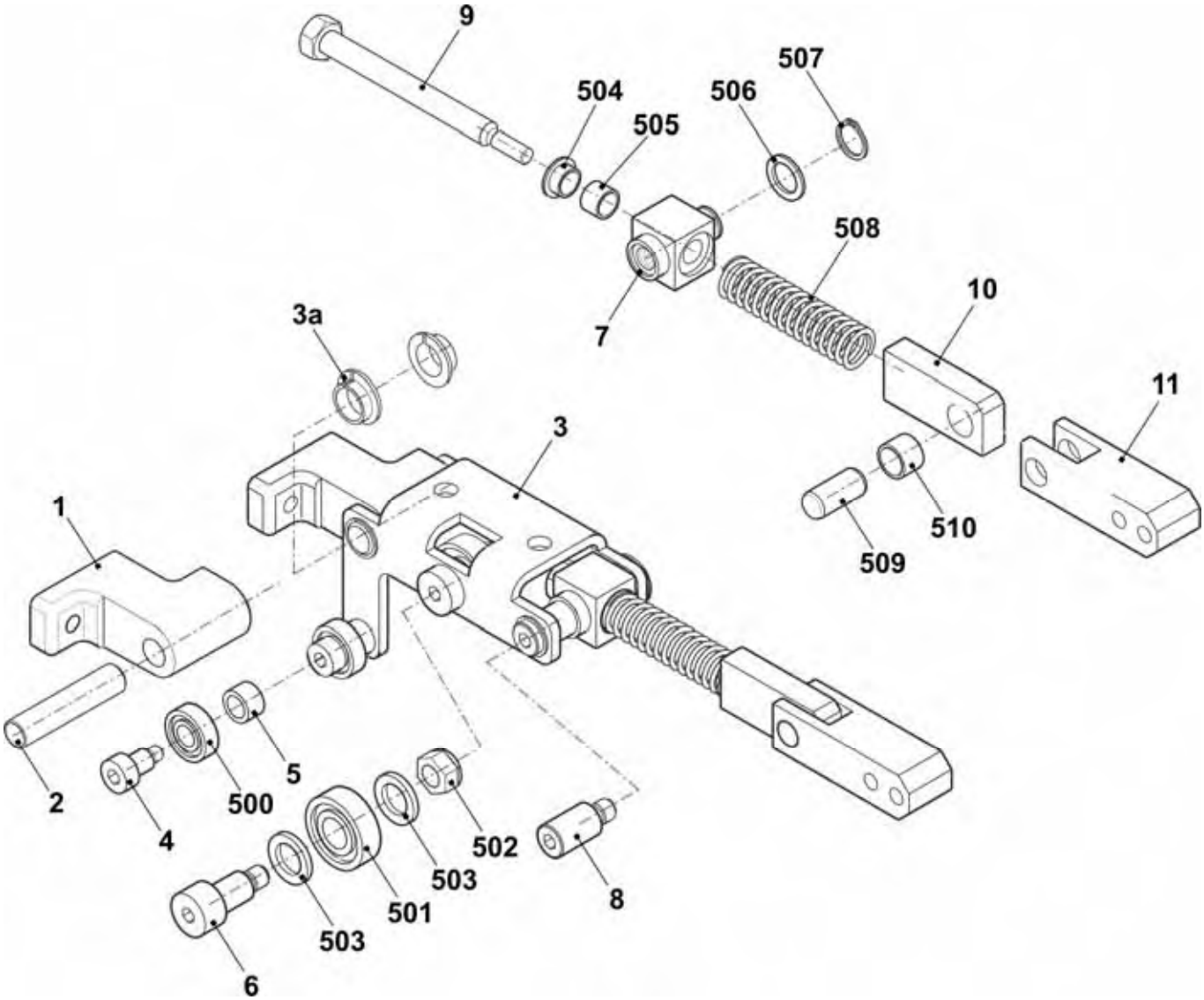

Left swivel holder

Pos	Designation	Ident No	Pos	Designation	Ident No
Σ	**Swivel holder on the left complete**	**239 189**	11	Lever	238 739
1	Support	239 163	500	Deep groove ball bearing 619/8-2RS	023 728
2	Bearing pin	239 164	501	Deep groove ball bearing 6000-2Z	022 599
3	Bow on the left	239 184	502	Hexagon nut M8-8	022 843
	3a Clip bearing 11-MCM-12-04	023 639	503	Adjusting washer 10x16x2	023 600
4	Shoulder screw	239 133	504	Slide bearing GFM-081014-06	023 358
5	Spacer	239 134	505	Slide bearing GSM-0810-10	023 896
6	Shoulder screw	239 132	506	Shim ring 12x18x1	023 315
7	Swivel-mounted bearing	239 100	507	Locking ring 12x1	020 951
8	Bearing bolt	239 117	508	Compression spring 2.5x12.5x67.5	023 743
9	Spring mandrel on the inside	232 388	509	Dowel pin 10x20	023 616
10	Lever	238 370	510	Slide bearing GSM-1012-10	239 178

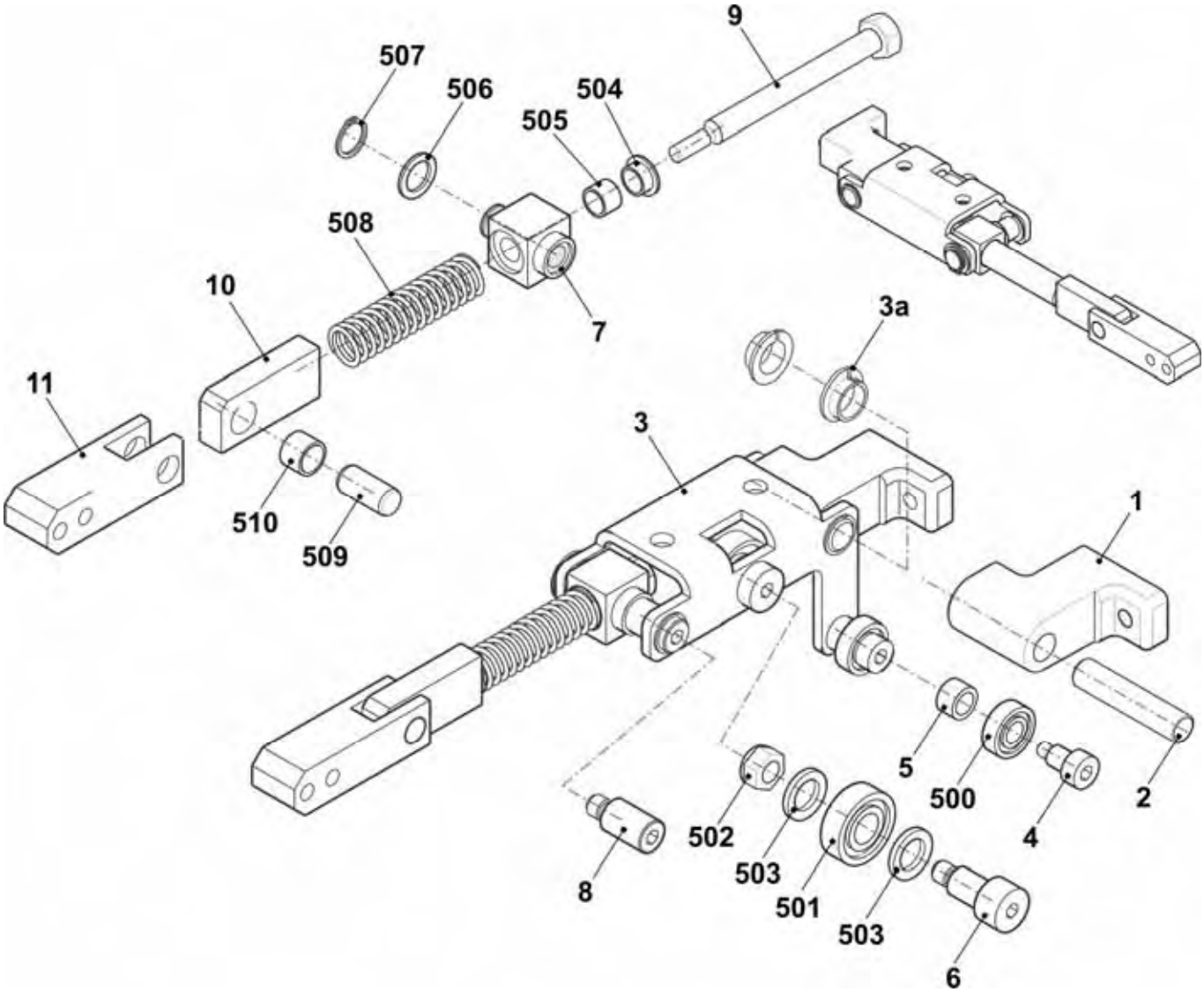

Swivel holder in the middle

Pos	Designation	Ident No	Pos	Designation	Ident No
Σ	**Swivel holder in the middle complete**	**239 188**	10	Angle	238 778
1	Support	239 163	501	Deep groove ball bearing 6000-2Z	022 599
2	Bearing pin	239 164	502	Hexagon nut M8-8	022 843
3	Bow	238 974	503	Adjusting washer 10x16x2	023 600
	3a Clip bearing 11-MCM-12-04	023 639	504	Slide bearing GFM-081014-06	023 358
6	Shoulder screw	239 132	505	Slide bearing GSM-0810-10	023 896
7	Swivel-mounted bearing	239 100	506	Shim ring 12x18x1	023 315
8	Bearing bolt	239 117	507	Locking ring 12x1	020 951
9	Spring mandrel on the inside	232 388	508	Compression spring 2.5x12.5x67.5	023 743

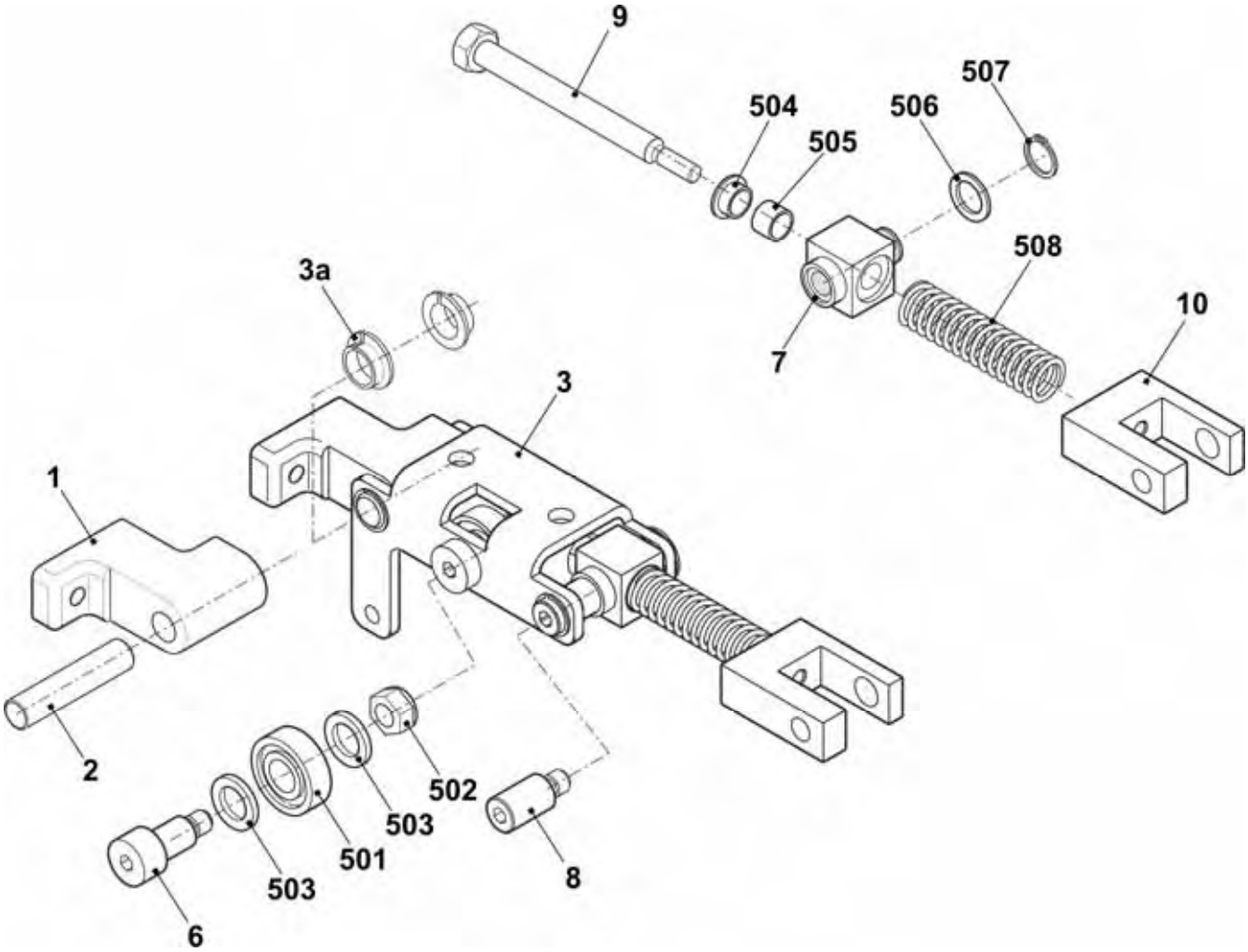

Auxiliary take-down

Auxiliary take-down

Pos	Designation	Ident No	Pos	Designation	Ident No
Σ	**Auxiliary take-down**	**237 087**	11	Distance pipe	235 189
1	Motor auxiliary take-down complete	235 602	12	Distance pipe	235 192
2	Bearing on the left	236 894	13	Cover plate	237 127
3	Support complete	235 354	14	Roll	235 178
	3a Slide bearing FSM-1517-20	237 060	500	Cap screw M5x10	022 918
4	Bearing on the right	235 353	501	Countersunk screw M4x8	023 579
5	Contact lever complete	235 356	502	Cap screw 6x10-12.9	235 448
6	Take-down roller complete	237 128	503	Stop disc GTM-1524-015	235 447
7	Contact shaft	237 126	504	Disc 5	020 871
8	Lever	235 164	530	Dowel pin 6M6x10	023 268
9	Clamping lever	235 156	900	Cap screw M6x12	020 134
10	Eccentric	236 952			

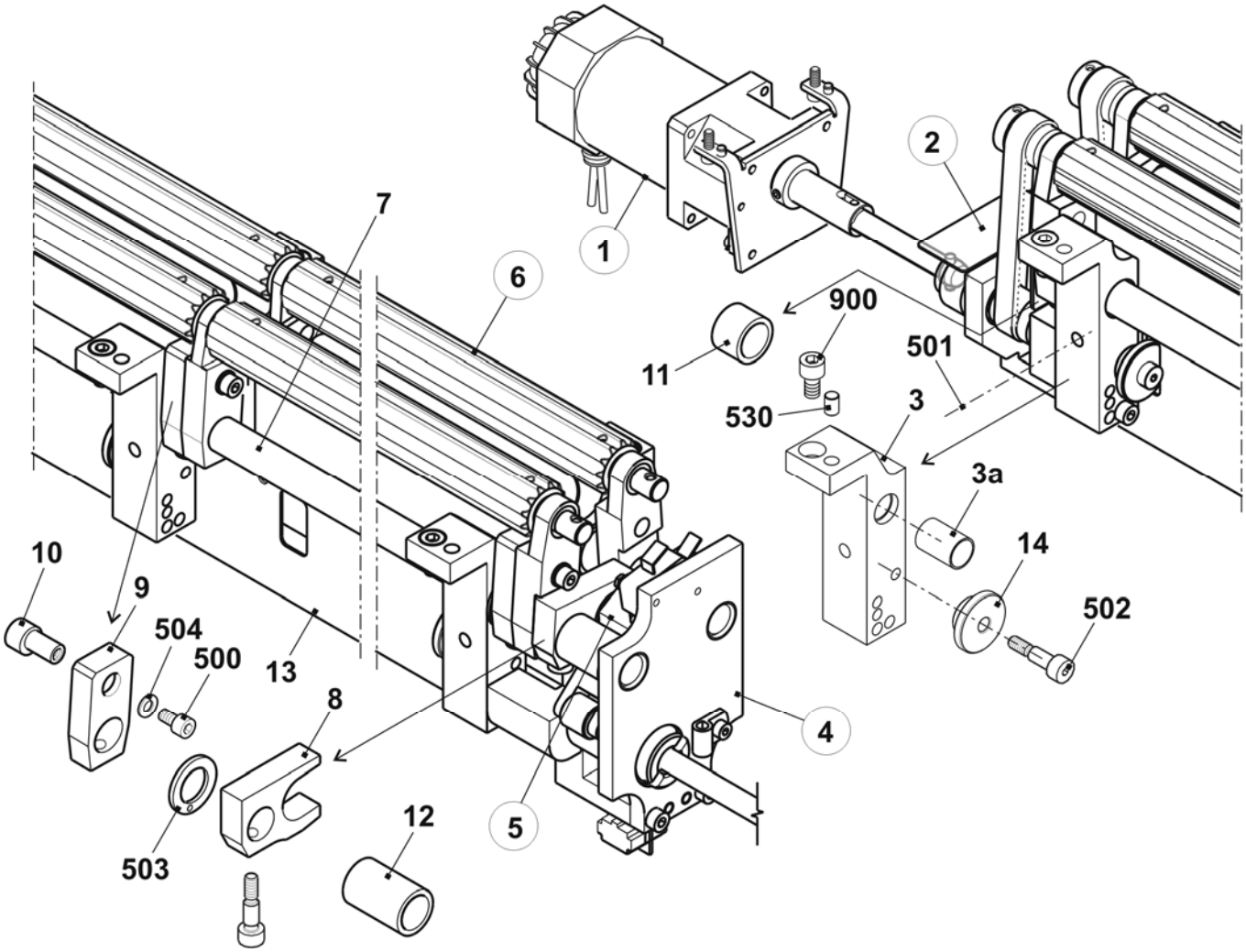

Motor

Pos	Designation	Ident No	Pos	Designation	Ident No
Σ	**Motor with 2 phases auxiliary take-down complete**	**235 602**	501	Cap screw M6x16	020 135
1	Motor 1.8NM 30MIN-1	234 805	502	Compression spring 0.63x10.97x40	023 500
2	Motor bracket	235 276	503	Adjusting washer 6x12x1	023 444
3	Drive sleeve	235 285	504	Dowel pin 5x22-A-ST	023 716
4	Shaft	235 300	900	Cap screw M6x12	020 134
500	Set screw M6x10	023 543			

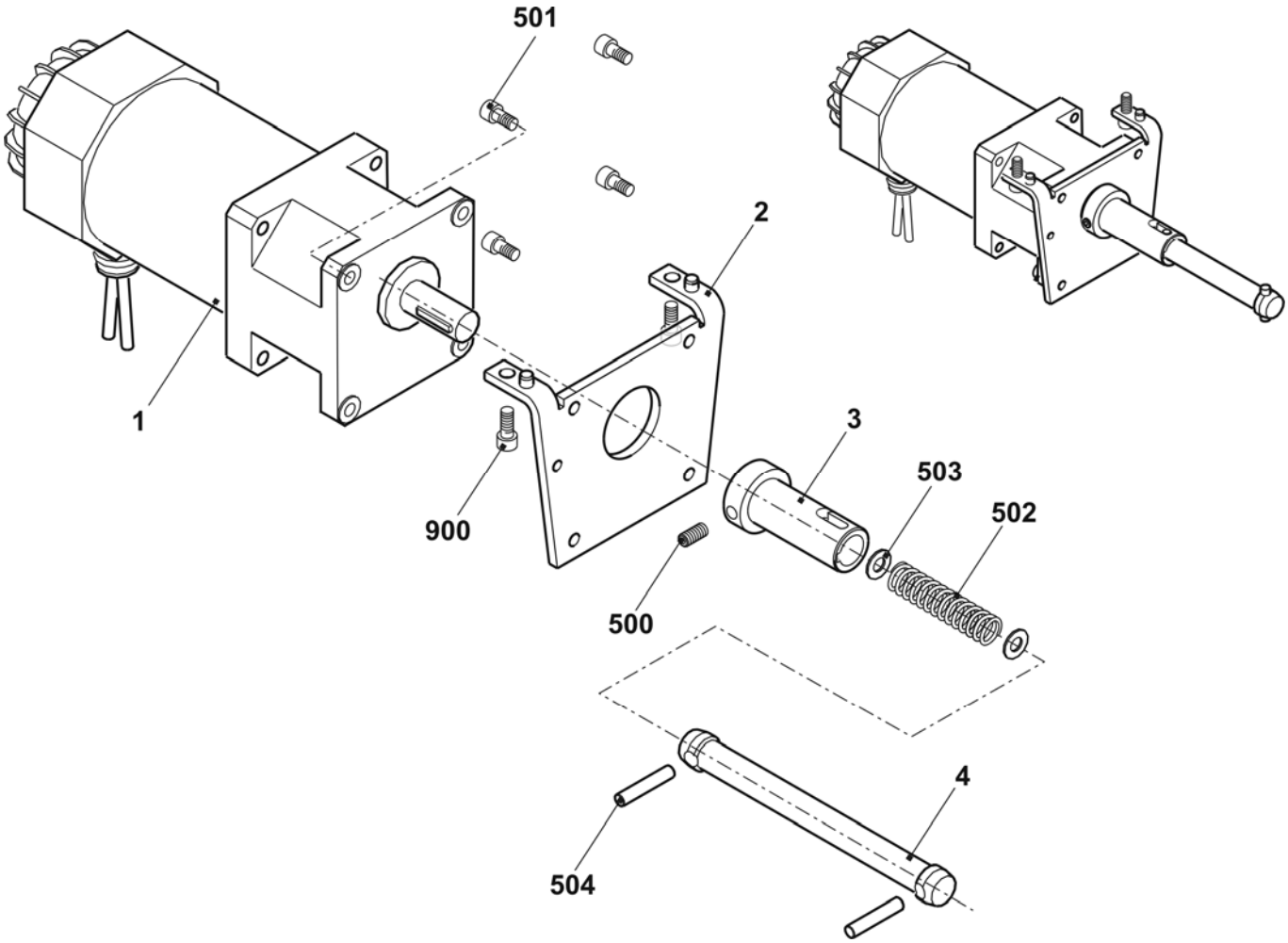

Left bearing of the auxiliary take-down

Pos	Designation	Ident No	Pos	Designation	Ident No
Σ	**Bearing on the left**	**236 894**	10	Toothed belt HPS5M NG CLEAN	237 118
1	Drive bearing	237 422	500	Setting pin 5x12	021 988
2	Cover plate	236 970	501	Deep groove ball bearing 61900-2RS1	023 714
3	Cover plate	237 037	502	Needle roller bearing 10x14x10	023 664
4	Bolt	236 964	503	Cap screw M4x8	022 501
5	Bolt	236 963	504	Countersunk screw M4x12	023 062
6	Gear wheel	236 914	505	Locking ring 10x1	020 950
7	Gear wheel	236 916	506	Spring dowel sleeve 3x18	237 059
8	Gear wheel	236 917	900	Cap screw M5x35	022 879
9	Timing belt pulley	237 043			

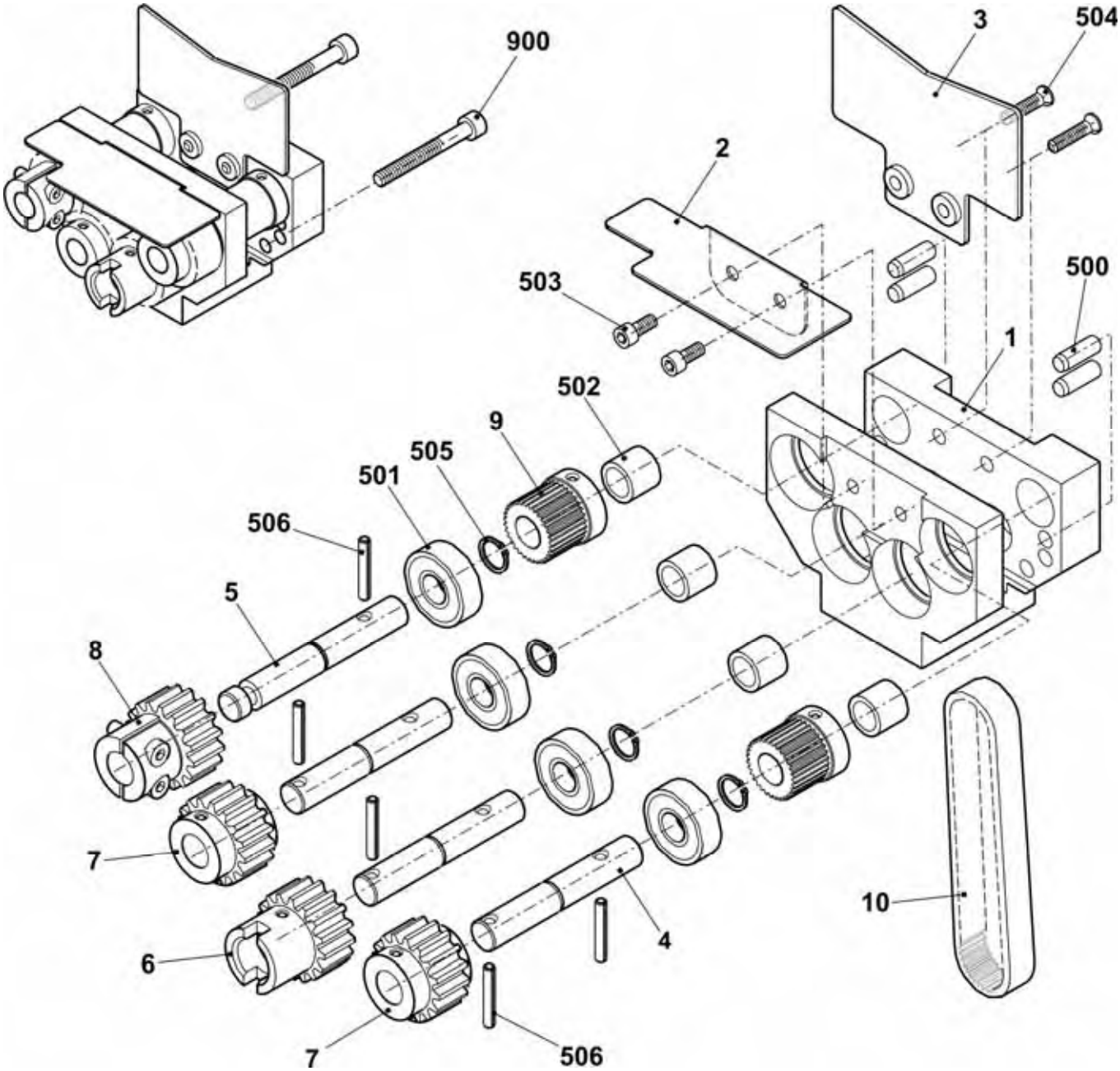

Right bearing of the auxiliary take-down

Pos	Designation	Ident No		Pos	Designation	Ident No
Σ	**Bearing on the right**	**235 353**		502	Compression spring 1.6x6.4x27.1	023 288
1	Bearing on the right	237 520		503	Slide bearing GFM-2427-07	023 712
2	Plate	235 168		504	Hexagon screw M3x16	237 058
3	Microswitch	026 259		505	Cap screw M4x8	022 501
4	Cable clip N-3B 5 mm	210 729		506	Set screw M6x12	023 724
5	Cable switch HIAB ST468	235 027		507	Cap screw M5x16	022 726
6	Sheet metal for plug	236 068		509	Slide bearing GFM-1517-09	235 342
7	Shaft	235 159		510	Feather key A 4x4x20	235 349
8	Eccentric	235 165		511	Countersunk screw M4x8	023 579
500	Slide bearing GFM-101216-09	023 356		512	Washer 3	020 877
501	Setting pin 5x12	021 988		900	Cap screw M5x35	022 879

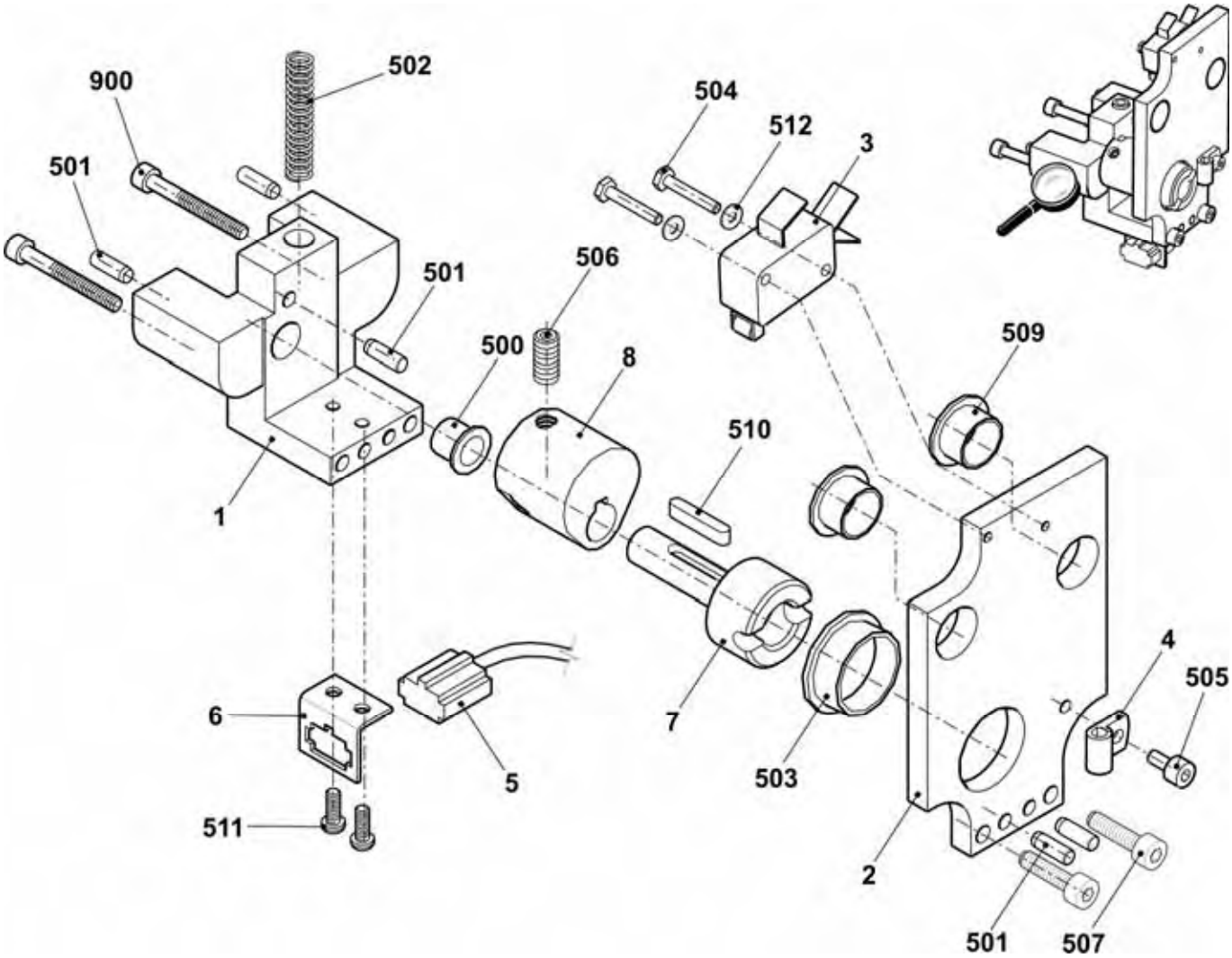

Contact lever

Pos	Designation	Ident No		Pos	Designation	Ident No
Σ	**Contact lever complete**	**235 356**		501	Cap screw 10x16-12.9	023 748
1	Lever	235 172		502	Countersunk screw 1-M4x45	023 291
2	Tilting lever	235 173		503	Compression spring 1.6x6.4x27.1	023 288
3	Roller	235 176		504	Washer 4-200HV	020 870
4	Roll	235 171		505	Hexagon nut M4-8	023 046
500	Slide bearing GFM-10x1216-06	023 280		506	Dowel pin 5x22-A-ST	023 716

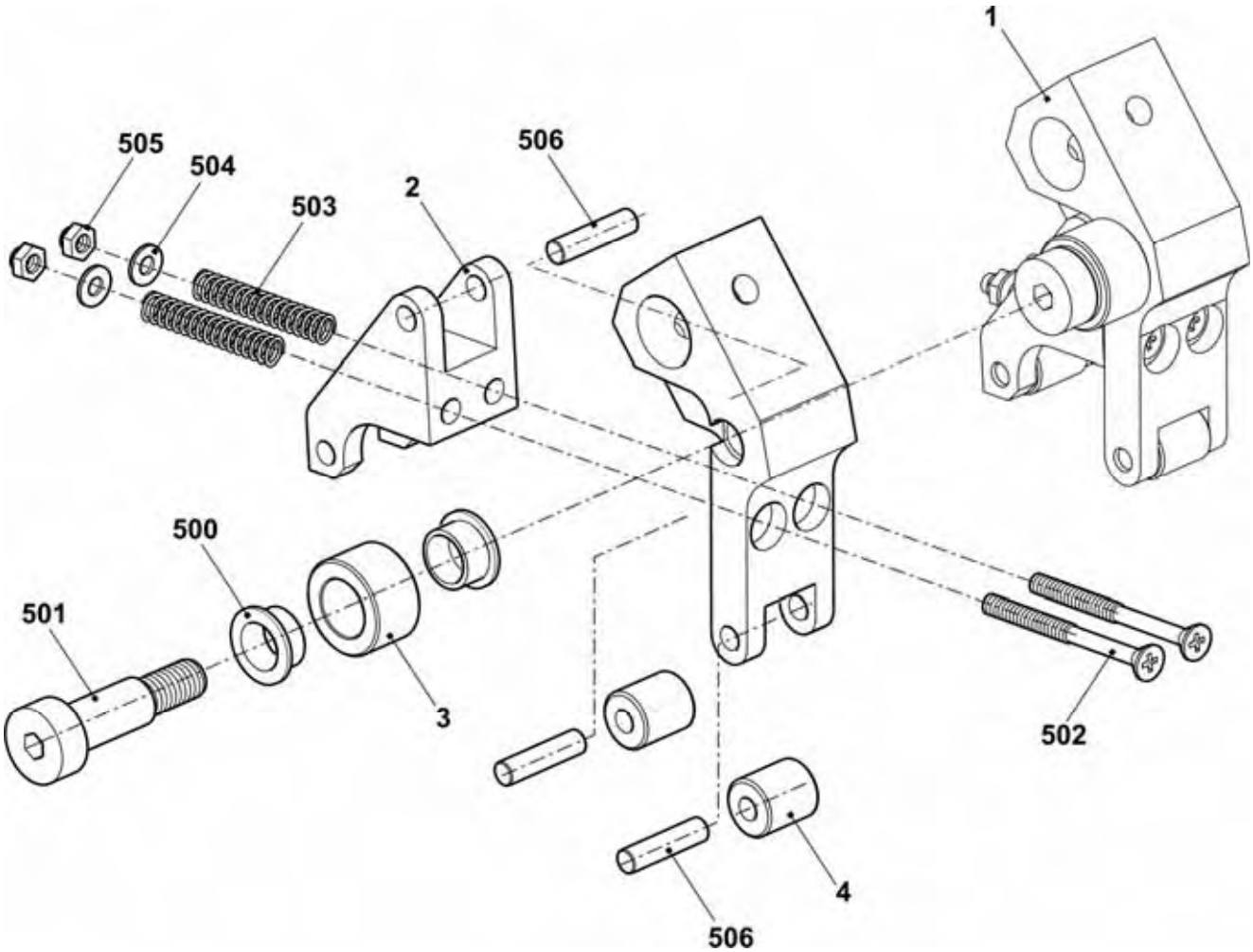

Take-down roller

Pos	Designation	Ident No		Pos	Designation	Ident No
Σ	**Take-down roller complete**	**237 128**			5a Needle roller bearing 10x14x12	023 665
1	Take-down roller	237 125		6	Lever bearing in the middle complete	235 359
2	Timing belt pulley	237 043		500	Slide bearing GFM-101214-07	023 627
3	Bolt	236 973		501	Spring dowel sleeve 3x18	237 059
5	Lever bearing on the right/left complete	235 358				

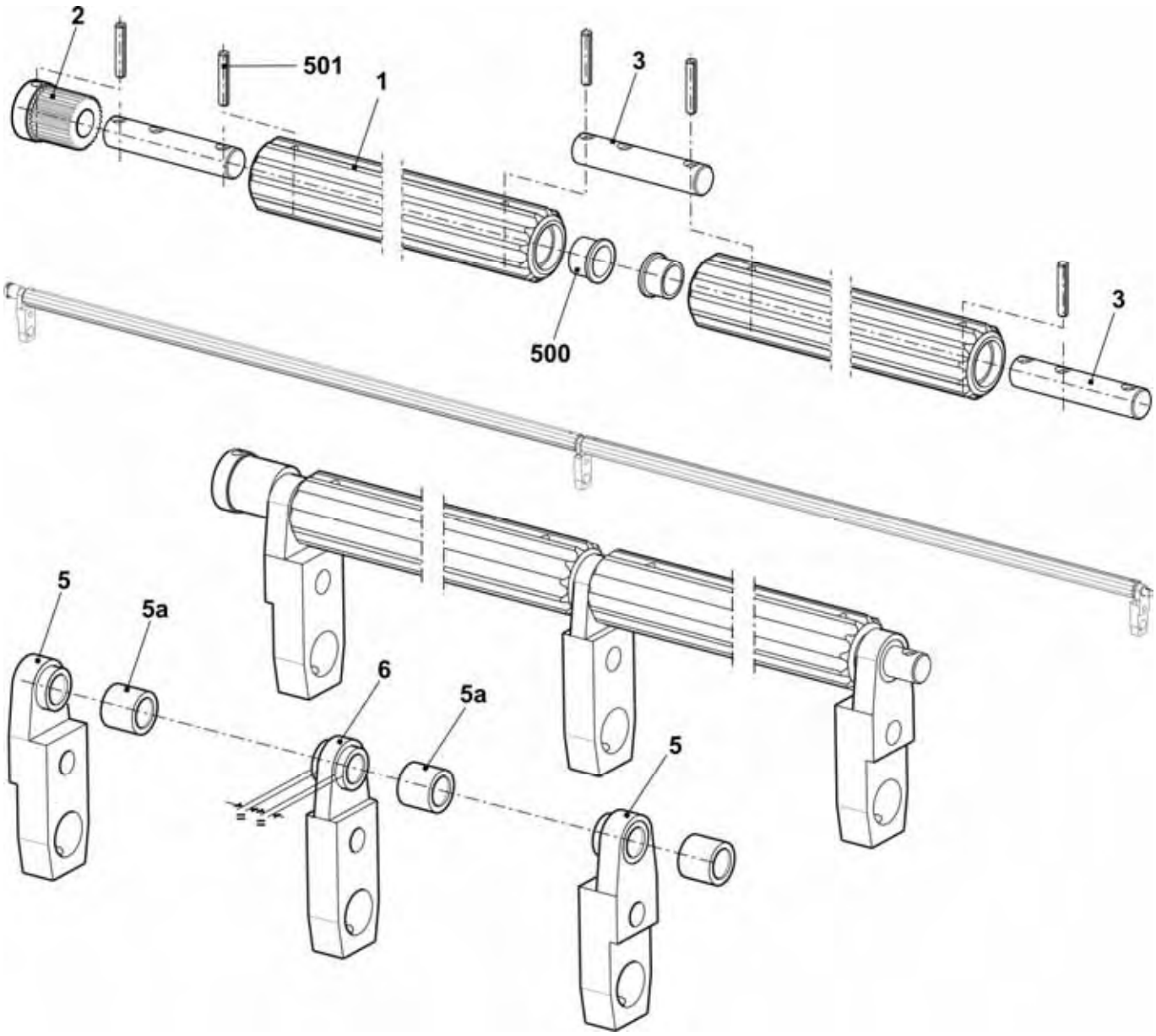

Comb take-down

Comb take-down

Pos	Designation	Ident No		Pos	Designation	Ident No
Σ	**Comb take-down**			28	Comb guide on the left	240 110
	E5 + E5m.4 + E2,5.2	**242 245**		29	Comb guide on the right	240 109
	E7 + E7m.5 + E7m.8 + E3,5.2	**242 246**		31	Comb unit	
	E8 + E8m.7	**242 247**		32	Motor take-down + comb	214 279
	E10 + E10m.12 + E5.2	**242 248**		33	Swivel lever on the right	252 858
	E12 + E6.2(12m.10) + E6.2	**242 249**		34	Swivel lever on the left	252 859
	E14 + E7.2	**242 250**		35	Guide plate	252 830
	E16 + E8.2	**242 251**		36	Clamping plate	227 159
	E18	**242 252**		500	Cap screw M6x16	020 135
3	Bolt	222 152		501	Countersunk screw M5x10	023 247
5	Toothed belt	240 065		505	Cap screw M8X20	020 141
6	Eccentric pin	222 320		507	Cap screw M6X65	240 162
8	Flange	207 695		509	Hexagon screw M6X16	020 356
9	Shaft long	236 875		515	Hexagon nut	020 845
11	Bolt	207 689		517	Washer	020 876
12	Drive shaft comb complete	214 583		524	Locking ring 17x1	023 299
14	Timing belt pulley at the bottom complete	211 822		525	Serrated lock washer	022 489
15	Timing belt pulley at the top complete	211 823		530	Tension spring 15x1.5x70.94	251 614
22	Proximity switch at the top complete	231 516		532	Shim 0.2x12x27	023 735
23	Proximity switch at the bottom complete	231 520		534	Shim 0.5x12x27	023 736

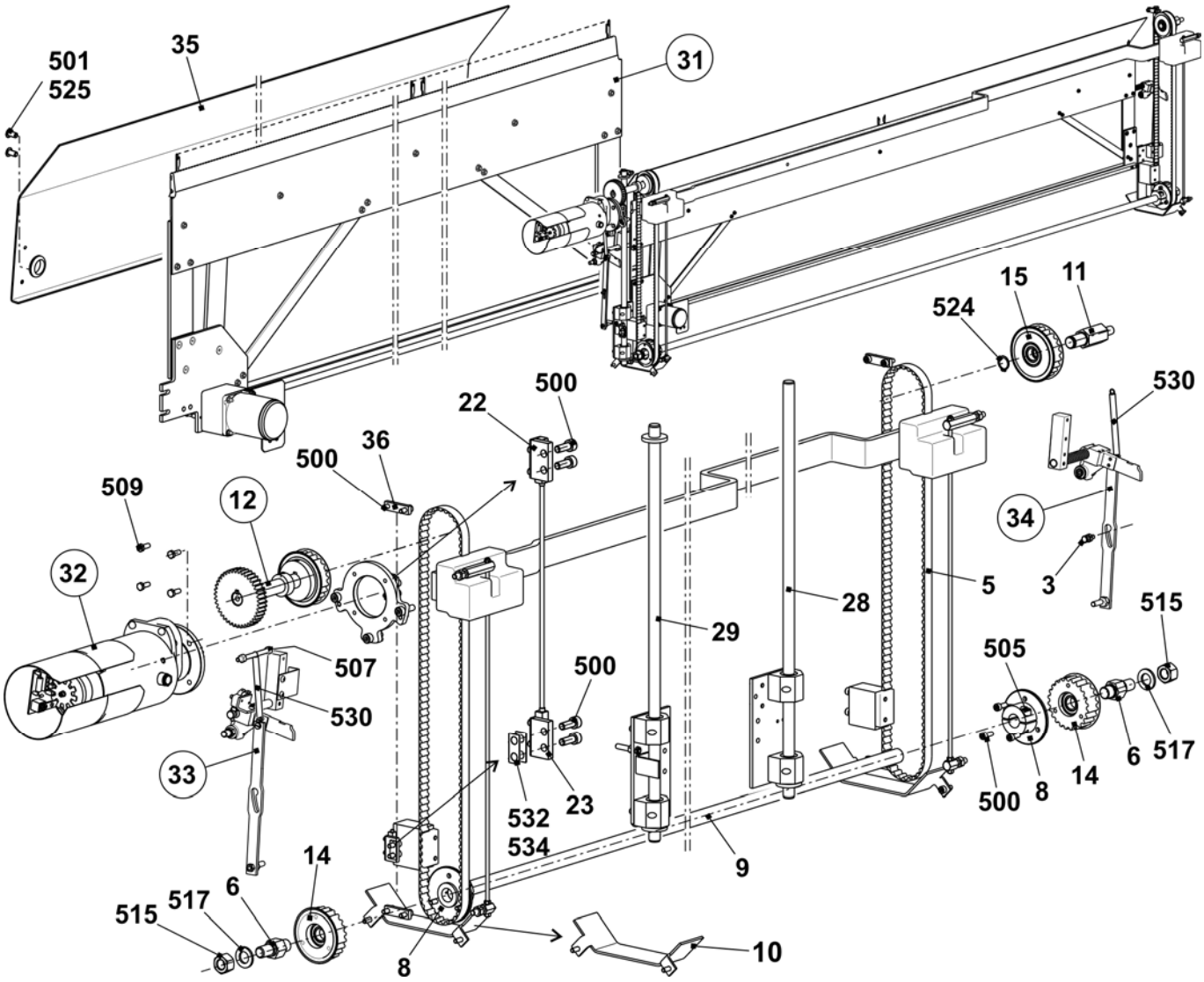

Drive shaft of comb

Pos	Designation	Ident No		Pos	Designation	Ident No
Σ	**Drive shaft of comb complete**	**214 583**				
1	Shaft	213 969		500	Feather key A 6x6x25	023 017
2	Gear wheel z=40, m=2	213 744		502	Set screw M6x8	022 684
	Always order pos. 502 additionally			503	Set screw M6x12	023 898
3	Timing belt pulley at the top	206 394		504	Set collar	020 938
	Always order pos. 503 additionally					

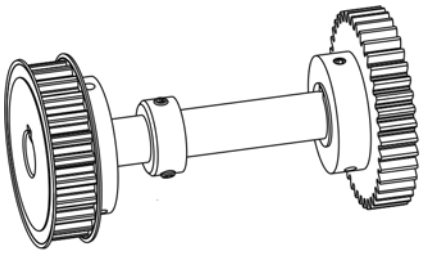

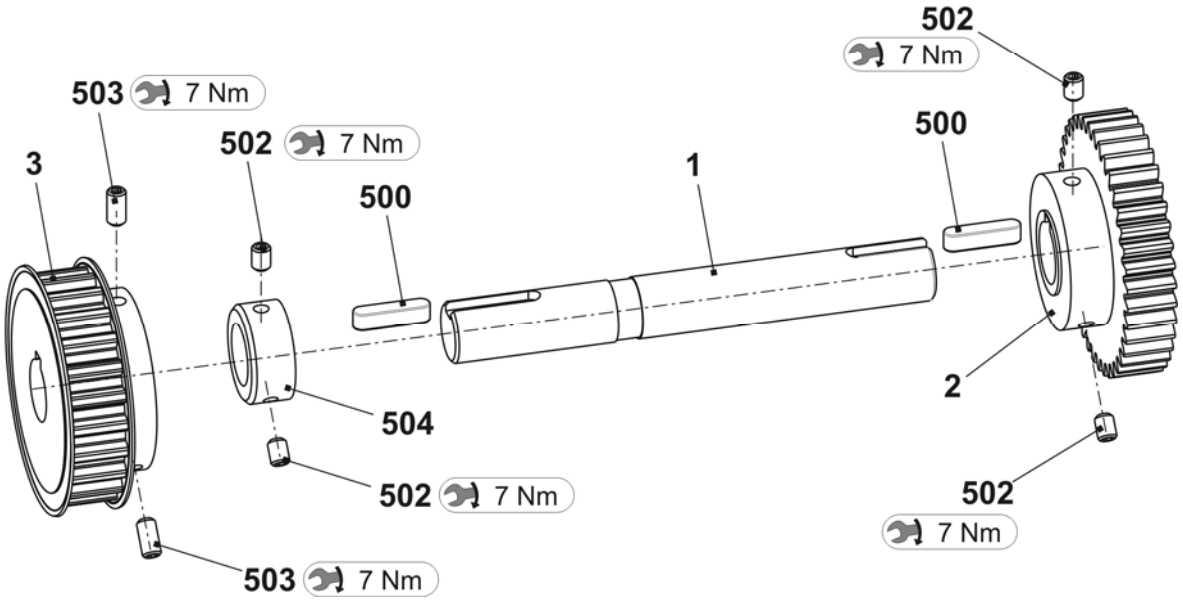

Comb unit

Pos	Designation	Ident No
Σ	**Comb unit**	
	E5 + E5m.4 + E2,5.2	**242 256**
	E7 + E7m.5 + E7m.8 + E3,5.2	**242 257**
	E8 + E8m.7	**242 258**
	E10 + E10m.12 + E5.2	**242 259**
	E12 + E6.2(12m.10) + E6.2	**242 260**
	E14 + E7.2	**242 261**
	E16 + E8.2	**242 262**
	E18	**242 263**
1	Hook bed	
	E5 + E5m.4 + E2,5.2	237 468
	E7 + E7m.5 + E7m.8 + E3,5.2	237 469
	E8 + E8m.7	237 694
	E10 + E10m.12 + E5.2	237 470
	E12 + E6.2(12m.10) + E6.2	237 471
	E14 + E7.2	237 472
	E16 + E8.2	237 695
	E18	237 473
2	Closer	
	E5 + E5m.4 + E2,5.2	230 105
	E7 + E7m.5 + E7m.8 + E3,5.2	230 105
	E8 + E8m.7	230 105
	E10 + E10m.12 + E5.2	230 106
	E12 + E6.2(12m.10) + E6.2	230 106
	E14 + E7.2	230 106
	E16 + E8.2	230 107
	E18	230 107
3	Body	
	E5 + E5m.4 + E2,5.2	230 093
	E7 + E7m.5 + E7m.8 + E3,5.2	230 093
	E8 + E8m.7	230 093

Pos	Designation	Ident No
3	Body	
	E10 + E10m.12 + E5.2	230 094
	E12 + E6.2(12m.10) + E6.2	230 094
	E14 + E7.2	230 094
	E16 + E8.2	230 095
	E18	230 095
4	Cover rail	237 065
5	Hook slider	
	E5 + E5m.4 + E2,5.2	237 463
	E7 + E7m.5 + E7m.8 + E3,5.2	237 464
	E8 + E8m.7	237 466
	E10 + E10m.12 + E5.2	237 465
	E12 + E6.2(12m.10) + E6.2	237 466
	E14 + E7.2	237 464
	E16 + E8.2	237 466
	E18	237 467
7	Collar bolt complete	211 036
8	Cross slider	237 069
9	Cover rail	237 074
10	Plunger	205 678
11	Switch lever complete	240 060
12	Intermediate plate	218 742
13	Stabilizator	237 056
500	Cap screw M4x50	023 102
502	Countersunk head screw M5x12	023 340
504	Hexagon nut M4-8	023 046
505	Hexagon nut M5-04	020 854
508	Washer 5-200	020 871
510	Cap screw M4x35	023 550
511	Circlip	022 774

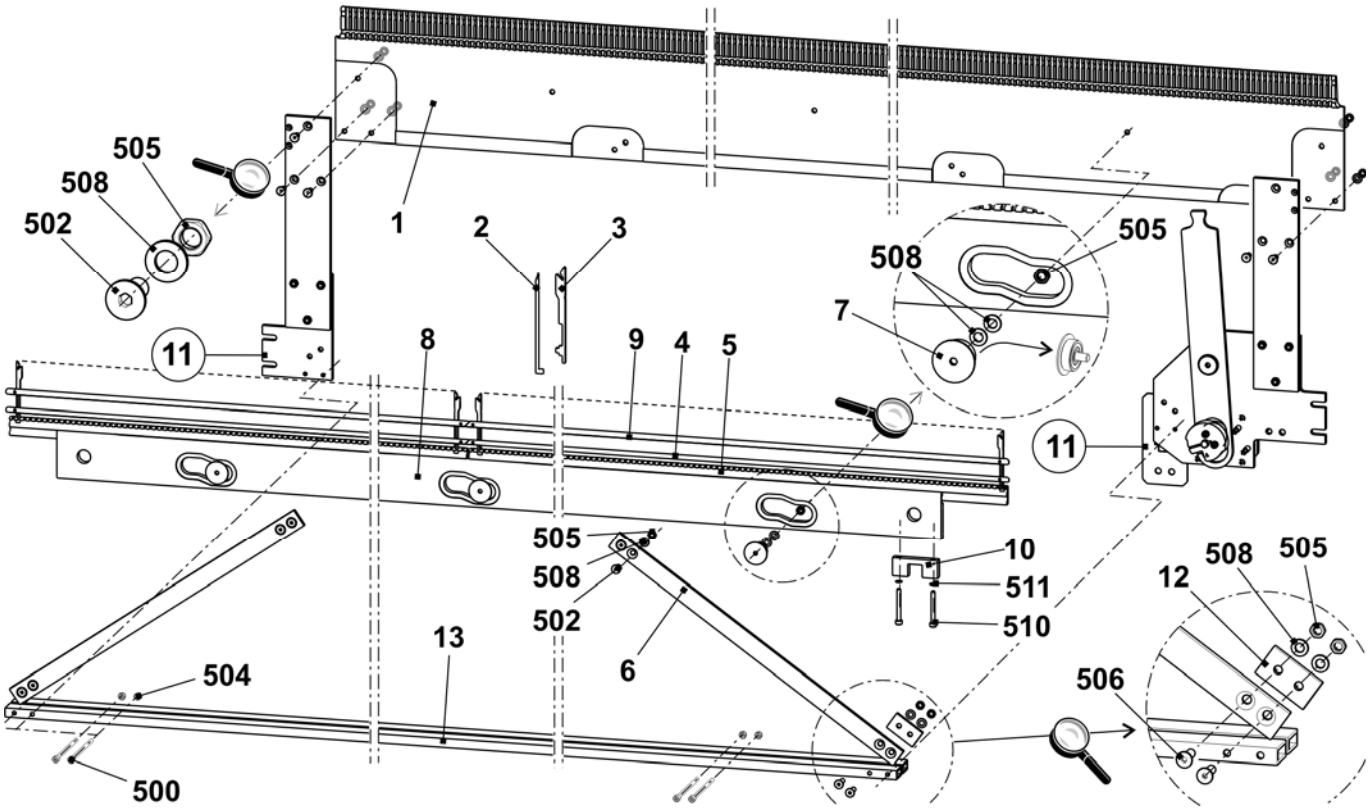

Switch lever comb take-down

Pos	Designation	Ident No	Pos	Designation	Ident No
Σ	**Switch lever complete**	**240 060**			
1	Screwing plate on the right	240 058	10	Gear 2GN50K	213 986
2	Screwing plate on the left	240 059	11	Cable holder	215 543
3	Lever	215 228	13	Intermediate plate	213 980
4	Bearing bolt	215 675	14	Retaining plate	218 977
5	Eccentric	205 681	500	Cap screw M3x25	023 093
6	Tension lifter	215 287	501	Cap screw M4x20	023 171
7	Motor comb hook 515	213 872	502	Cap screw M4x16	023 123

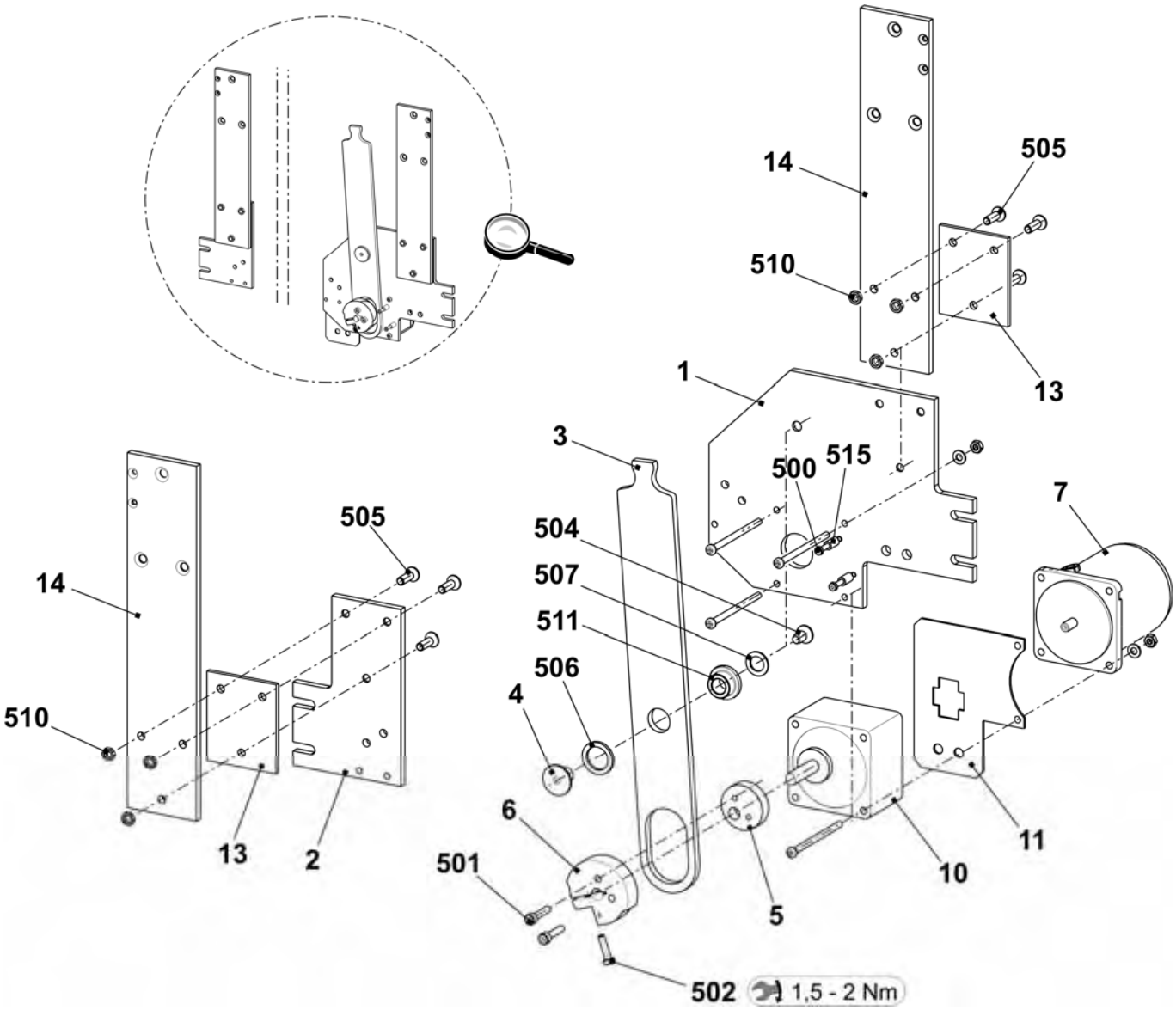

Swivel lever comb take-down

Pos	Designation	Ident No
Σ L	**Swivel lever on the left**	**252 859**
1	Support	252 780
2	Shaft	223 994
4	Plunger	251 099
5	Swivel lever	239 248
6	Bolt	214 053
7	Eccentric bolt	243 225
500	Compression spring 1.4x13.6x93	023 572
501	Spring dowel sleeve ISO8752-5x20	020 794
502	Dowel pin 5x22	023 716
504	Shoulder screw M5x29x35	251 618
505	Shoulder screw M5x5.8x6.2	023 365
507	Washer 10-200	020 884
508	Locking ring	020 950
509	Shoulder screw M5x12x18	020 539
511	Hexagon nut M6-6	022 899

Pos	Designation	Ident No
Σ R	**Swivel lever on the right**	**252 858**
1	Support	252 780
2	Shaft	238 339
3	Microswitch	026 259
4	Plunger	251 099
5	Swivel lever	239 248
6	Bolt	214 053
7	Angle	224 009
8	Angle	238 304
9	Eccentric bolt	243 225
500	Countersunk screw M5x10	023 247
501	Spring dowel sleeve 5x20	020 794
502	Dowel pin 5x22	023 716
503	Spring dowel sleeve 5x12	020 793
504	Shoulder screw M5x29x35	251 618
505	Shoulder screw M5x5.8x6.2	023 365
506	Cap screw M4x8	022 501
507	Washer 10	020 884
508	Locking ring 10x1	020 950
509	Shoulder screw M5x12x18	020 539
510	Shoulder screw M3x16	022 583
511	Washer 3	020 877
513	Hexagon nut M6-6	022 899

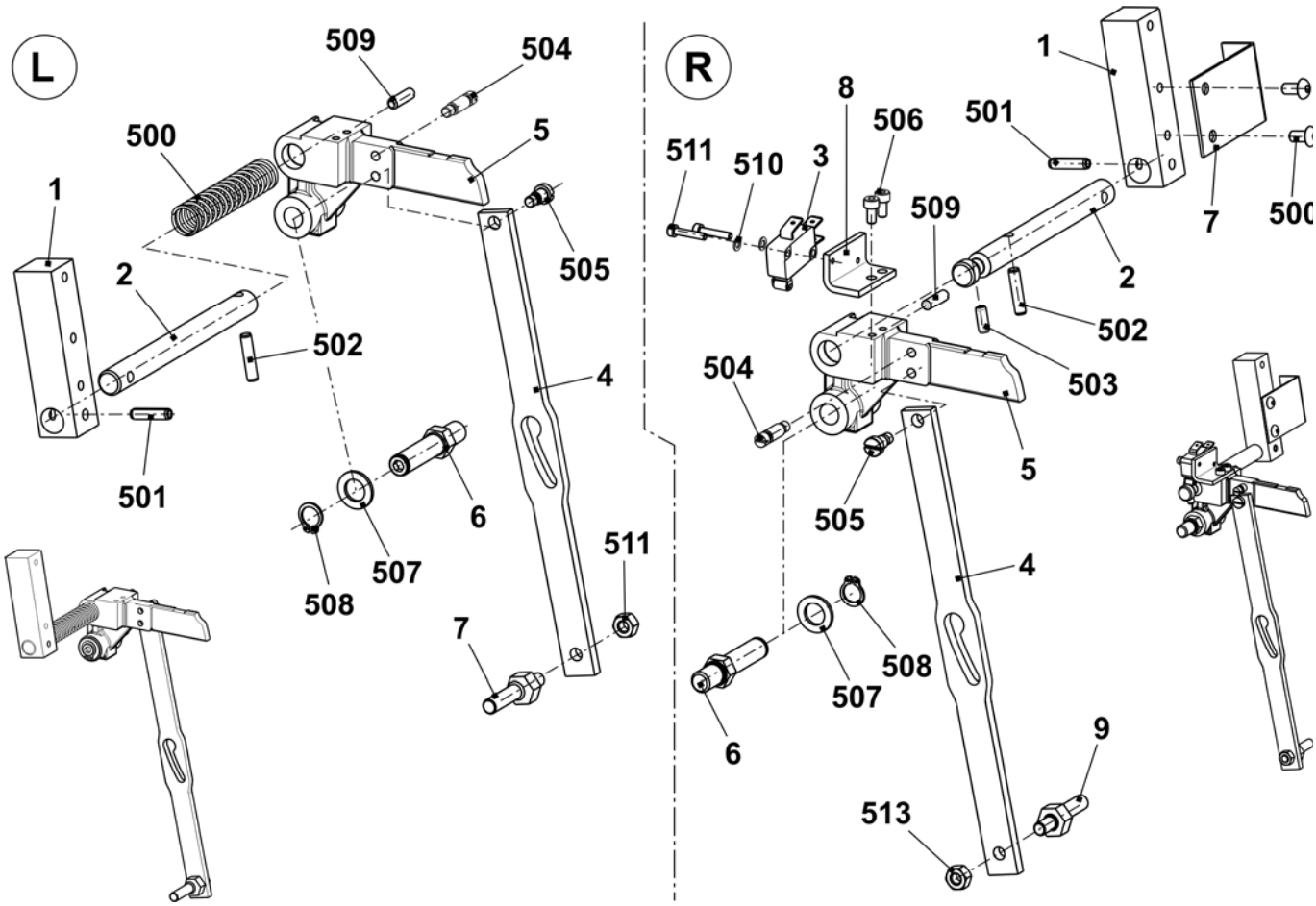

Yarn delivery device

Yarn guide system from 20 up to 26 FKE

Pos	Designation	Ident No		Pos	Designation	Ident No
Σ	**Yarn guide system 20 FKE 84''**	**240 685**				
	Yarn guide system 26 FKE 84''	**242 269**		8	Yarn guide bracket complete	241 581
1	Support	243 112		9	Sliding block	228 851
2	Yarn control device (FKE)	237 124		500	Serrated lock washer	023 388
3	Connection cable FKE-3 84"	240 349		501	Self-locking screw M6x12	023 415
4	Yarn guide bar	236 932		502	Screw M6x20	023 721
5	Support on the right	243 601		503	Ribbed safety nut M6-10	023 414
6	Support on the left	243 600		505	Washer 6-200	022 431
7	Support	243 792		506	Countersunk screw M8x16	023 113

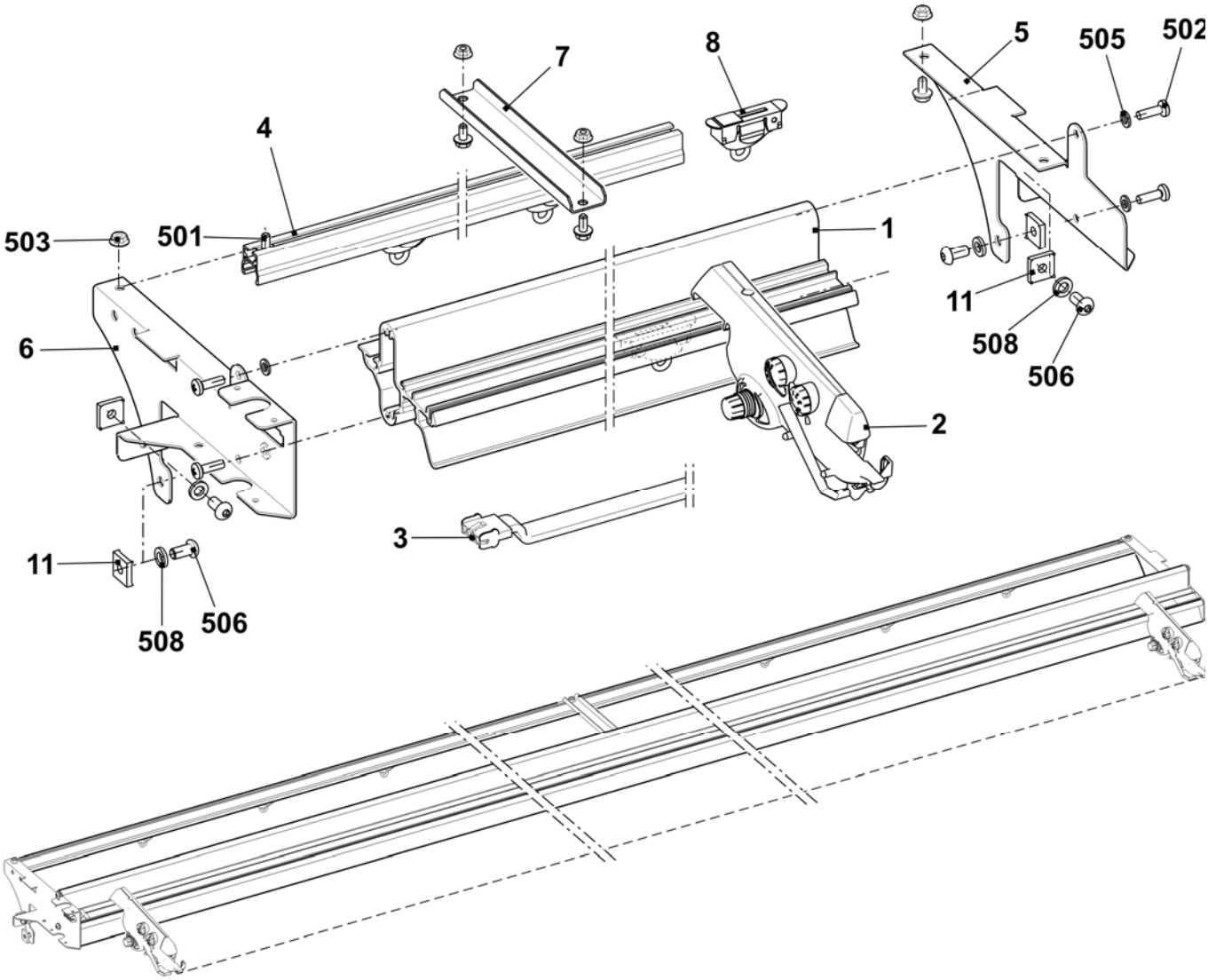

STOLL
THE RIGHT WAY TO KNIT

Yarn guide system with 32 FKE

Pos	Designation	Ident No	Pos	Designation	Ident No
Σ	**Yarn guide system 32 FKE 84''**	**242 991**			
1	Support	243 112	13	Support on the left	243 602
2	Yarn control device (FKE)	237 124	14	Support on the right	243 603
3	Connection cable FKE-3 84"	240 349	500	Serrated lock washer	023 388
4	Yarn guide bar	236 932	501	Self-locking screw M6x12	023 415
5	Support on the right	243 601	502	Screw M6x20	023 721
6	Support on the left	243 600	503	Ribbed safety nut M6-10	023 414
7	Support	239 295	505	Washer 6	022 431
8	Yarn guide bracket complete	241 581	506	Countersunk screw M8x16	023 113
9	Sliding block	228 851	507	Square nut M8	023 269

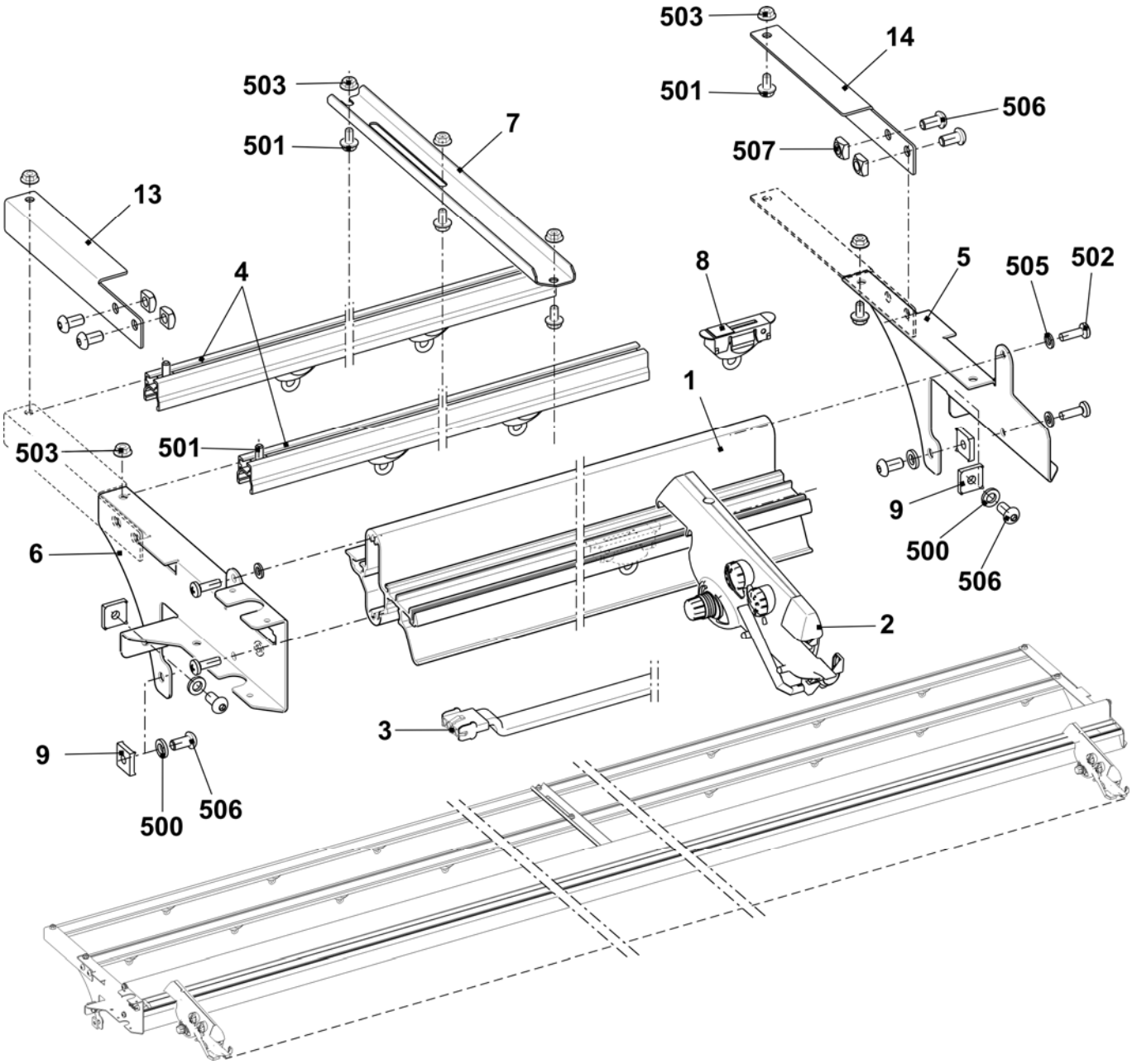

Yarn control unit

Pos	Designation	Ident No		Pos	Designation	Ident No
Σ	**Yarn control unit**	**237 124**		3	Disc	216 372
1	Yarn brake disk	216 365		4	Compression spring	244 488
2	Porcelain eyelet of yarn brake	244 407				

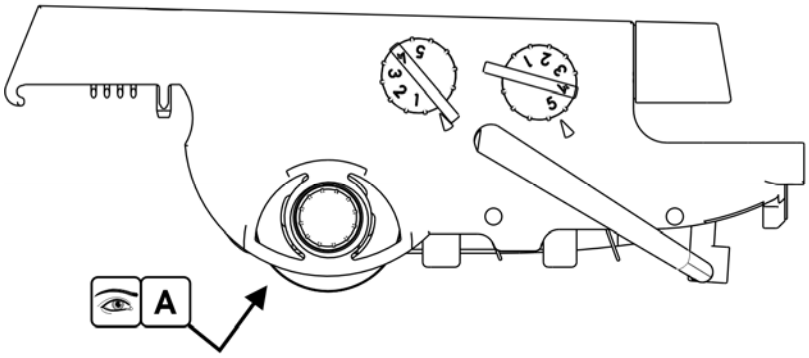

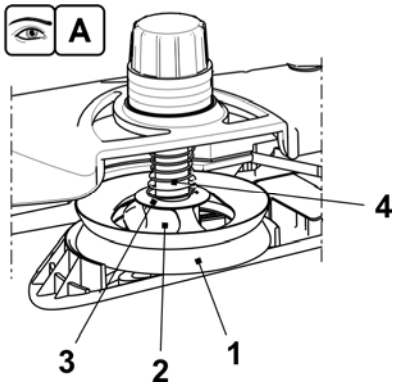

Left yarn guide

Pos	Designation	Ident No		Pos	Designation	Ident No
Σ	**Safety cover on the left complete**			9	Wire bow on the left	241 370
	E3 - E5 + E2,5.2 + E3,5.2 + E5.2 + E5m.4 + E7m.5	**241 271**		10	Yarn deflector	242 011
	E7 - E8 + E6.2 + E7m.8 + E8m.7	**241 272**		11	Connection cable yarn tensioner OKC	240 808
	E10 - E18 + E7.2 + E8.2 +E9.2 + E10m.12 + E6.2(12m.10)	**241 273**		13	Yarn brake not adjustable	244 356
5	Yarn brake complete	244 347		14	Clamping bow	244 409
6	Shaft	241 318		15	Ground cable	244 404
7	Yarn tensioner on the left complete			501	Ceramic eyelet	240 640
	E3 - E5 + E2,5.2 + E3,5.2 + E5.2 + E5m.4 + E7m.5	241 363		502	Compression spring 0.90x5.40x13.60	241 360
	E7 - E8 + E6.2 + E7m.8 + E8m.7	241 364		504	Washer	022 537
	E10 - E18 + E7.2 + E8.2 + E9.2 + E10m.12 + E12m.10 + E6.2(12m.10)	241 365		510	Screw KB 60x20	237 682
8	Cover	240 783		512	Flat connector 2x45° M6	243 117

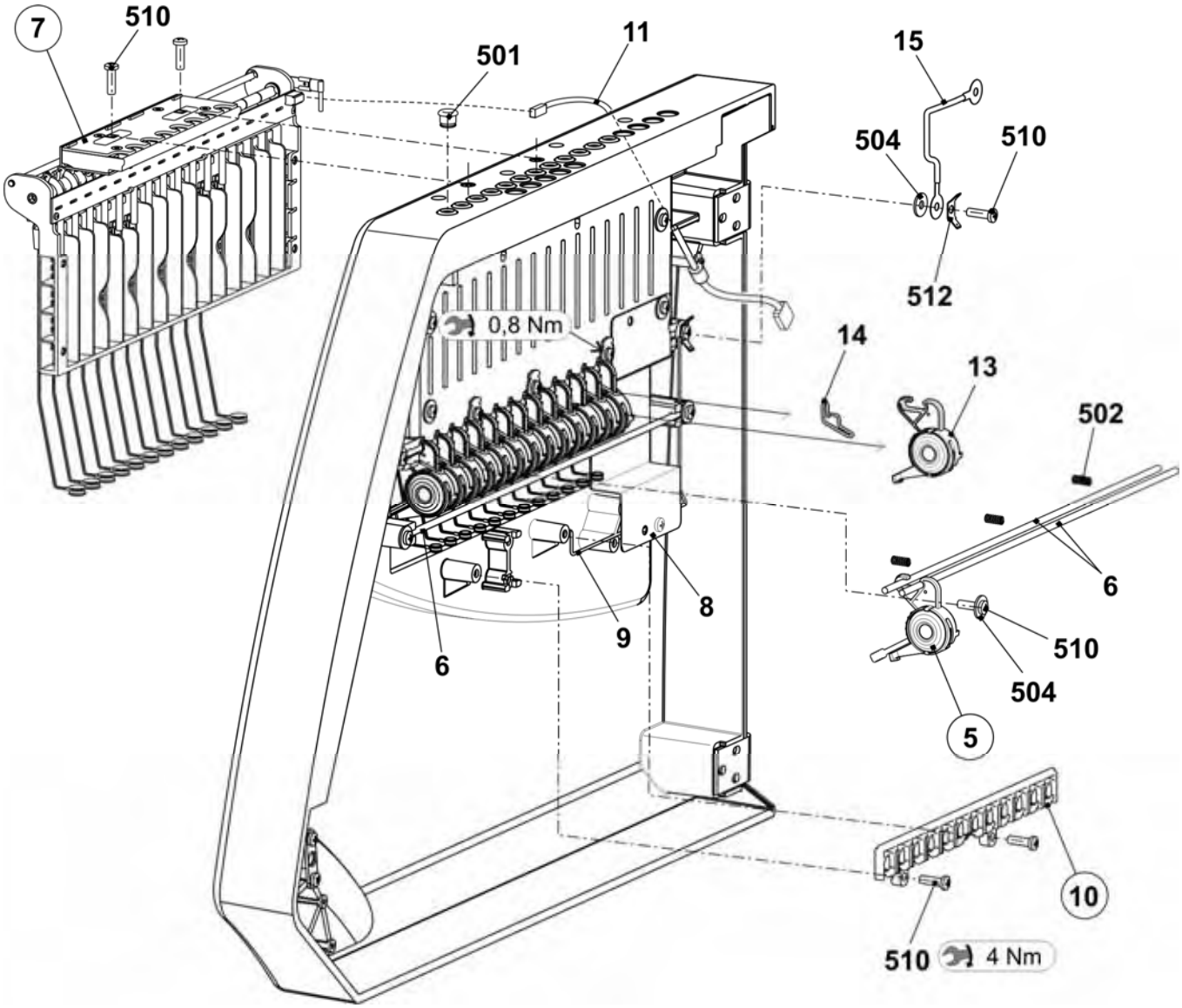

Left yarn tensioner

Pos	Designation	Ident No		Pos	Designation	Ident No
Σ	**Yarn tensioner on the left complete**			6	Cover	242 268
	E3 - E5 + E2,5.2 + E3,5.2 + E5.2 + E5m.4 + E7m.5	**241 363**		7	Spacer	242 048
	E7 - E8 + E6.2 + E7m.8 + E8m.7	**241 364**		8	Grounding sheet metal of tension axle	243 121
	E10 - E18 + E7.2 + E8.2 + E9.2 + E10m.12 + E6.2(12m.10)	**241 365**		9	Ground cable yarn tensioner OKC	243 105
1	Card yarn tensioner 16-fold on the left	241 345		500	Screw KB 30x8	236 228
2	Tension axle on the left complete			501	Circlip	021 022
	E3 - E8 + E2,5.2 + E3,5.2 + E5.2 + E6.2 + E5m.4 + E7m.5 + E7m.8 + E8m.7	241 366		502	Tension spring 5.05x0.55x53 (E3 - E5+ E2,5.2 + E3,5.2 + E5.2 + E5m.4 + E7m.5)	023 502
	E10 - E18 + E7.2 + E8.2 + E9.2 + E10m.12 + E12m.10 + E6.2(12m.10)	241 381			Tension spring 4.9x0.5x53 (E7 - E8 + E6.2 + E7m.8 + E8m.7)	023 503
3	Housing	241 367			Tension spring 4.9x0.45x53 (E10 - E18 + E7.2 + E8.2 + E9.2 + E10m.12 + E12m.10 + E6.2(12m.10))	023 504
4	Slider	241 694		503	Circlip	021 020
5	Stop point	241 368		504	Countersunk screw M4x10	241 914

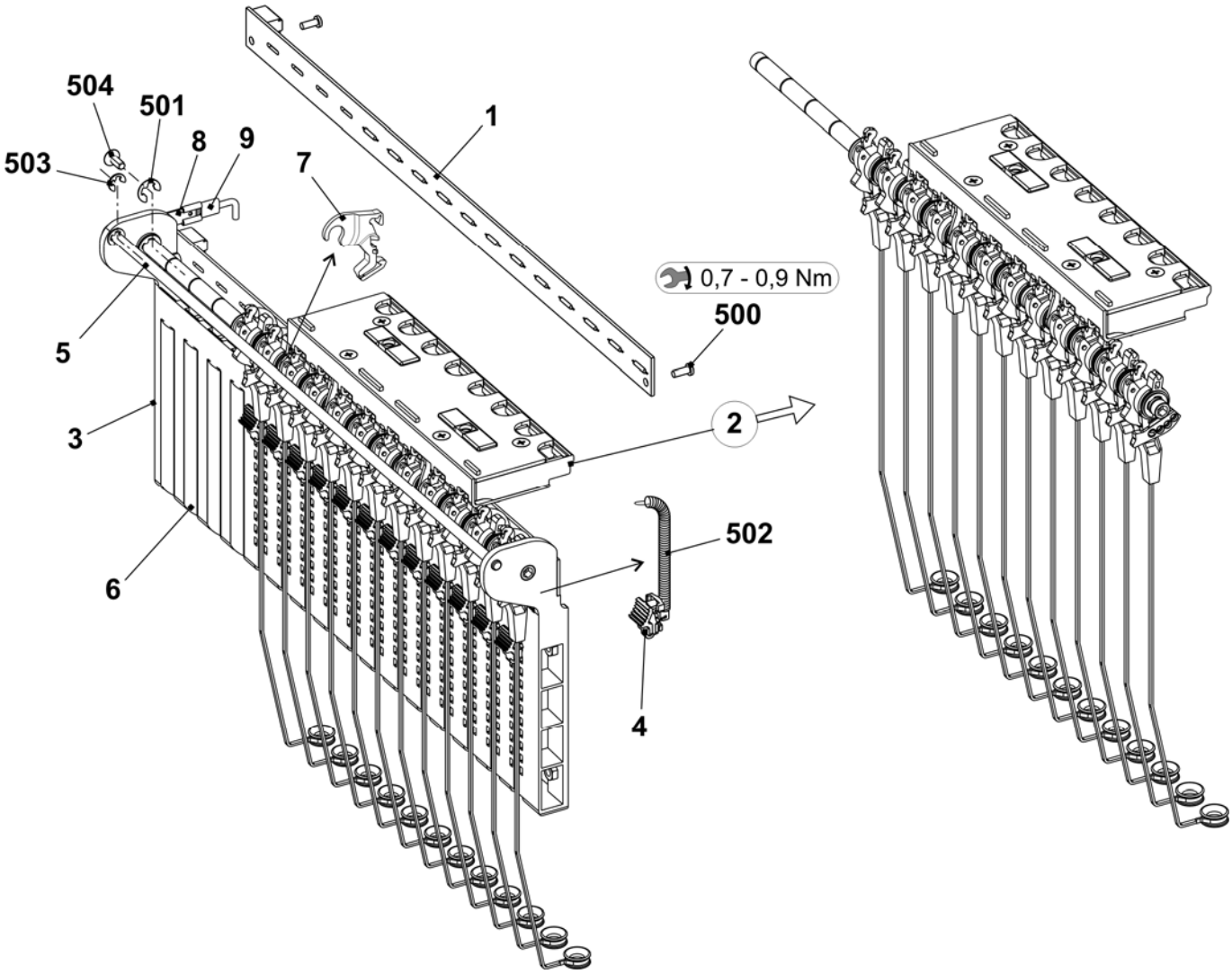

Yarn brake and yarn deflector

Pos	Designation	Ident No	Pos	Designation	Ident No
A	**Yarn brake complete**	**244 347**	**B**	**Yarn deflector**	**242 011**
1	Support	240 607	1	Support yarn deflector	242 009
2	Slider	240 606	2	Ceramic eyelet open	240 733
3	Brake disk	244 355			
4	Ceramic eyelet open	243 778			
500	Compression spring 0.65x20.15x14.80	241 361			
501	O-ring 11x2	241 434			

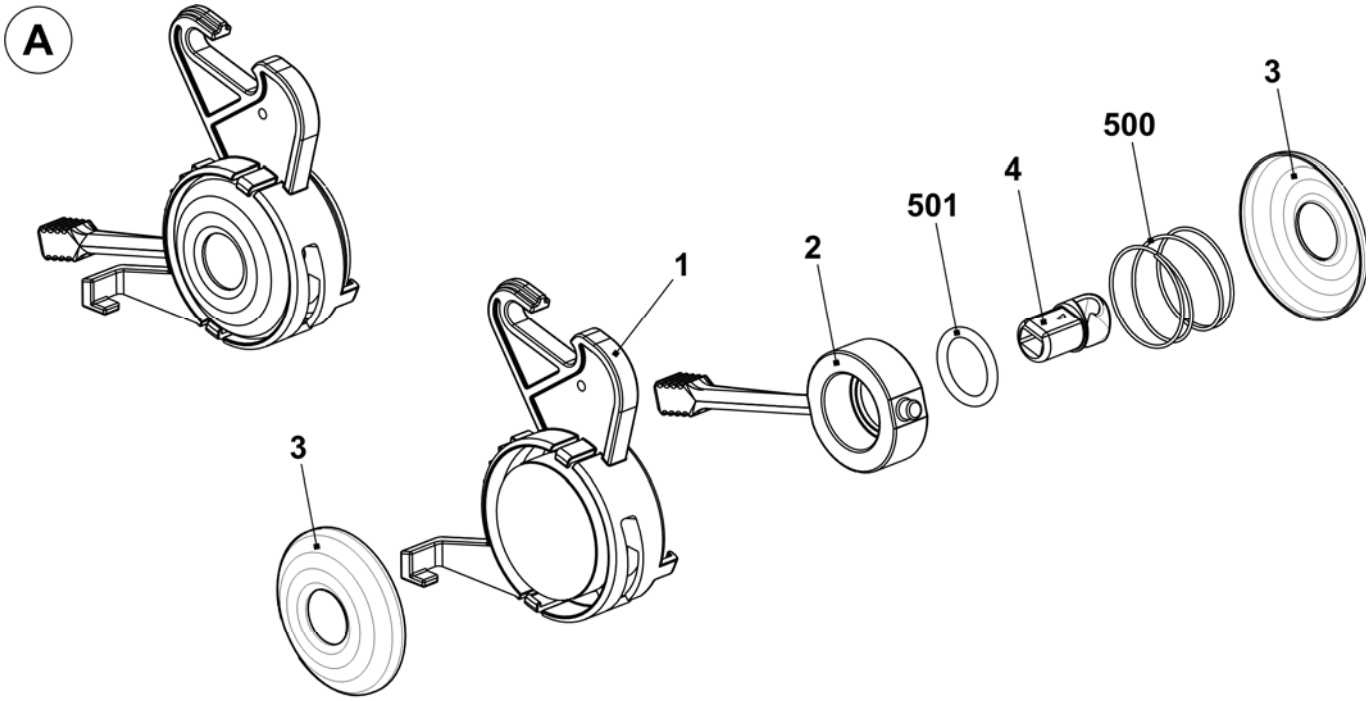

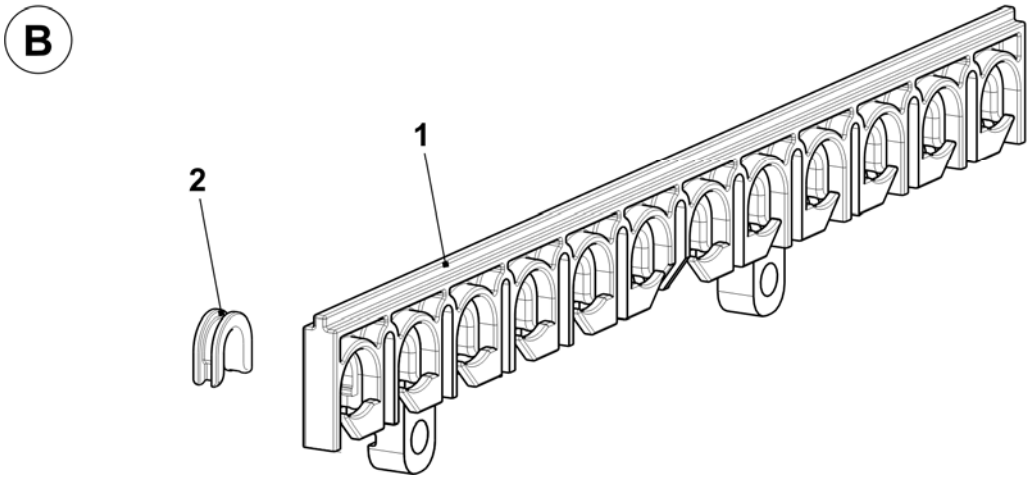

Left tension axle

Pos	Designation	Ident No	Pos	Designation	Ident No
Σ	**Tension axle on the left complete**		502	Grooved pin 2x6	243 172
	E3 – E8 + E2,5.2 + E3,5.2 + E5.2 + E6.2 + E5m.4 + E7m.5 + E7m.8 + E8m.7	**241 366**	**5**	**Thread clamp AKF**	**238 695**
			51	Housing AKF	238 689
	E10 - E18 + E7.2 + E8.2 + E9.2 + E10m.12 + E12m.10 + E6.2(12m.10)	**241 381**	52	Cover AKF	237 926
			53	Sheet metal at the bottom (housing AKF)	240 719
1	Axle	243 107	54	Lever AKF	238 692
2	Tension arm pre-assembled		55	Thrust piece AKF	238 690
	E3 - E8 + E2,5.2 + E3,5.2 + E5.2 + E6.2 + E5m.4 + E7m.5 + E7m.8 + E8m.7	242 770	56	Slider AKF	238 691
			57	Wire bow	238 694
	E10 - E18 + E7.2 + E8.2 + E9.2 + E10m.12 + E12m.10 + E6.2(12m.10)	242 771	58	Wire	237 940
			551	Screw KB 35x12	237 681
6	Wire bow	238 694	552	Screw KB 40x8	236 227
500	Shim ring 8x14x0.5	023 501	553	Compression spring 0.30x4.50x18.50	241 437
501	Circlip	021 022	554	Grooved pin 2x6	243 172

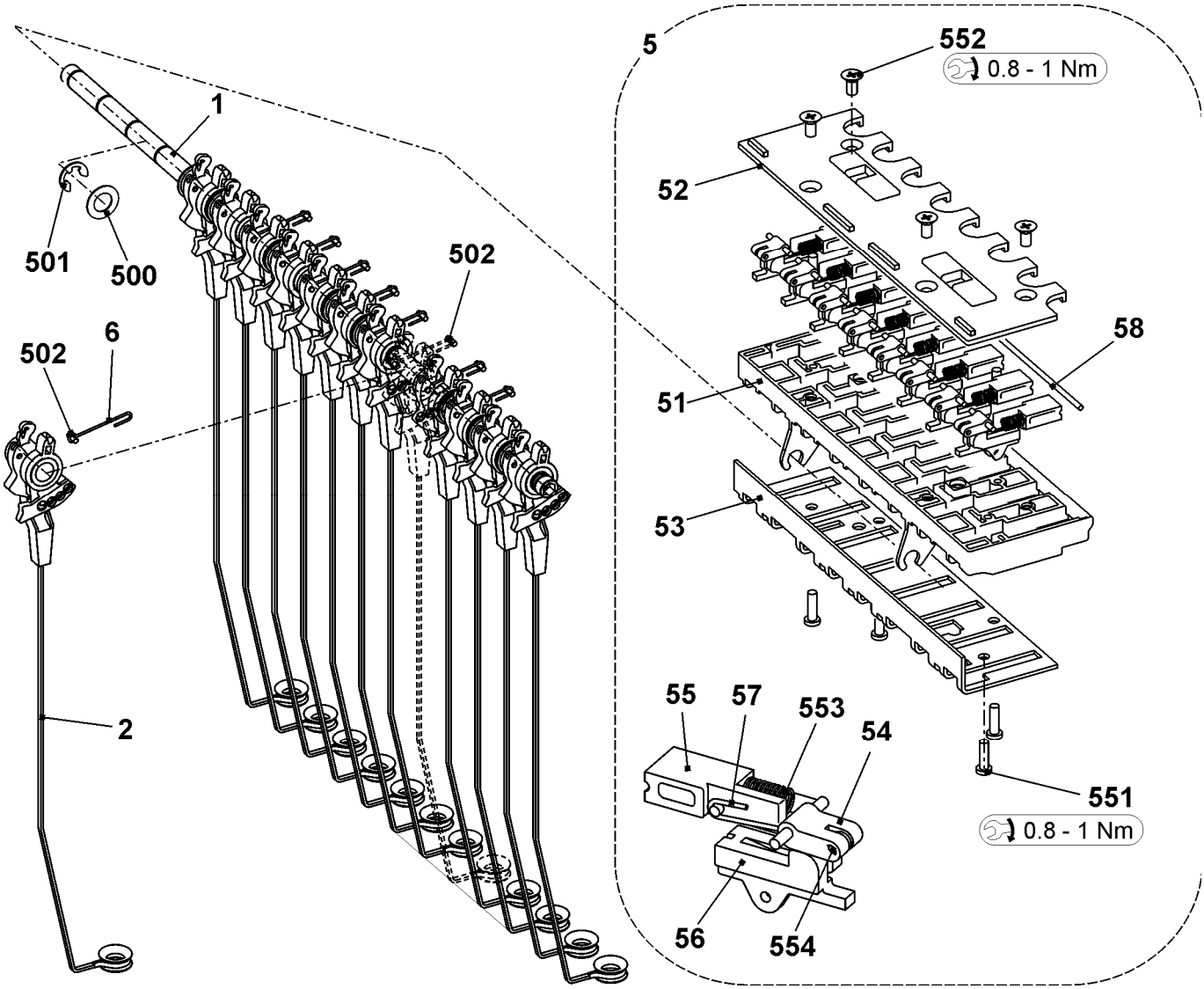

STOLL
THE RIGHT WAY TO KNIT

Right yarn guide

Pos	Designation	Ident No	Pos	Designation	Ident No
Σ	**Safety cover on the right complete**		9	Wire bow on the right	241 369
	E3 - E5 + E2,5.2 + E3,5.2 + E5.2 + E5m.4 + E7m.5	241 274	10	Yarn deflector	242 011
	E7 - E8 + E6.2 + E7m.8 + E8m.7	241 275	11	Connection cable yarn tensioner OKC	240 808
	E10 - E18 + E7.2 + E8.2 +E9.2 + E10m.12 + E6.2(12m.10)	241 276	13	Yarn brake not adjustable	244 356
5	Yarn brake complete	244 347	14	Clamping bow	244 409
6	Shaft	241 318	15	Ground cable	244 404
7	Yarn tensioner on the right complete		501	Ceramic eyelet	240 640
	E3 - E5 + E2,5.2 + E3,5.2 + E5.2 + E5m.4 + E7m.5	241 382	502	Compression spring 0.90x5.40x13.60	241 360
	E7 - E8 + E6.2 + E7m.8 + E8m.7	241 383	504	Washer	022 537
	E10 - E18 + E7.2 + E8.2 + E9.2 + E10m.12 + E12m.10 + E6.2(12m.10)	241 384	510	Screw KB 60x20	237 682
8	Cover	240 783	512	Flat connector 2x45° M6	243 117

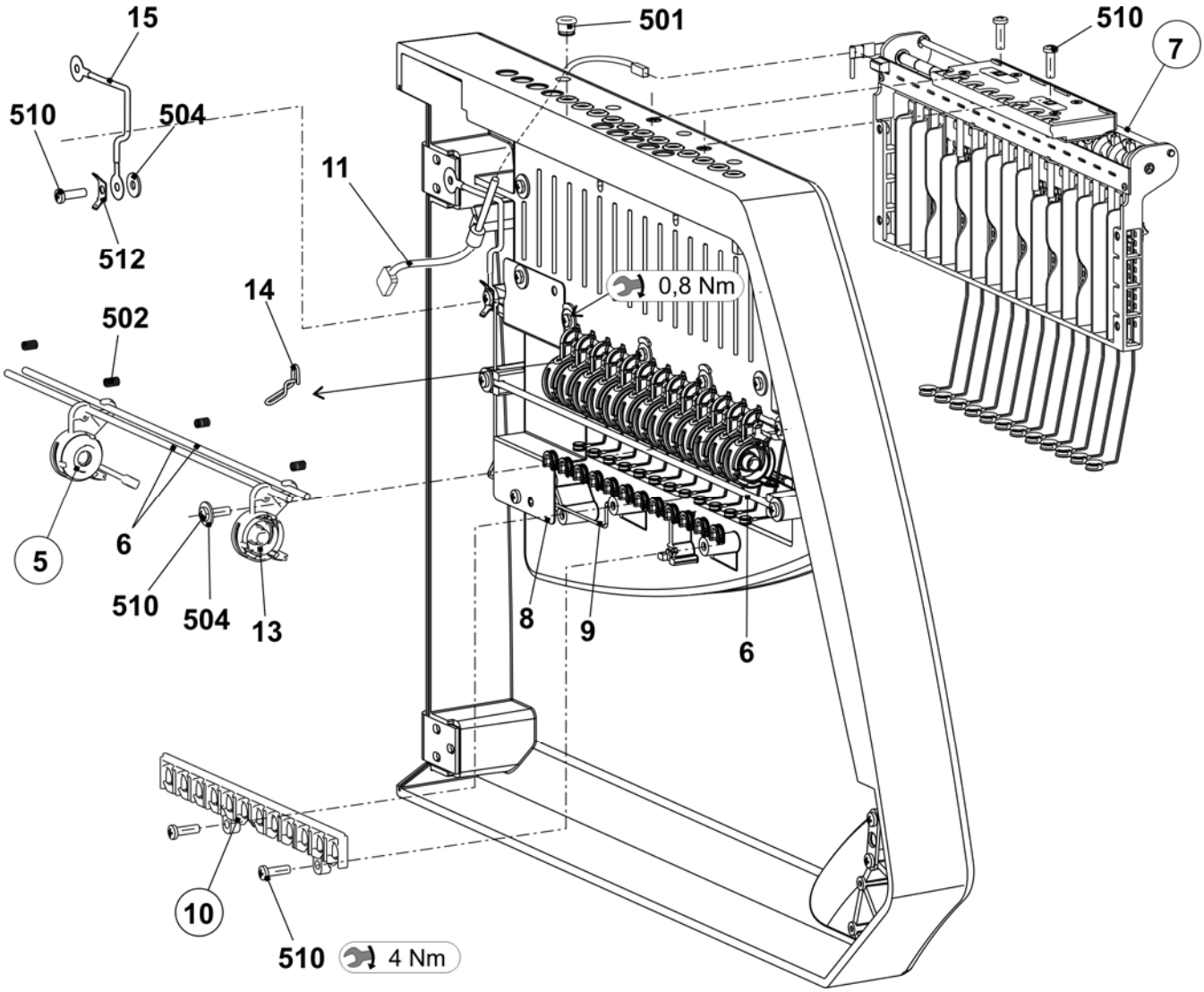

Right yarn tensioner

Pos	Designation	Ident No	Pos	Designation	Ident No
Σ	**Yarn tensioner on the right**		6	Cover	242 268
	E3 - E5 + E2,5.2 + E3,5.2 + E5.2 + E5m.4 + E7m.5	**241 382**	7	Spacer	242 048
	E7 - E8 + E6.2 + E7m.8 + E8m.7	**241 383**	8	Grounding sheet metal of tension axle	243 121
	E10 - E18 + E7.2 + E8.2 +E9.2 + E10m.12 + E6.2(12m.10)	**241 384**	9	Ground cable yarn tensioner OKC	243 105
1	Card yarn tensioner 16-fold on the right	241 346	500	Screw KB 30x8	236 228
2	Tension axle on the right complete		501	Circlip	021 022
	E3 - E8 + E2,5.2 + E3,5.2 + E5.2 + E6.2 + E5m.4 + E7m.5 + E7m.8 + E8m.7	241 379	502	Tension spring 5.05x0.55x53 (E3 - E5+ E2,5.2 + E3,5.2 + E5.2 + E5m.4 + E7m.5)	023 502
	E10 - E18 + E7.2 + E8.2 + E9.2 + E10m.12 + E12m.10 + E6.2(12m.10)	241 380		Tension spring 4.9x0.5x53 (E7 - E8 + E6.2 + E7m.8 + E8m.7)	023 503
3	Housing	241 367		Tension spring 4.9x0.45x53 (E10 - E18 + E7.2 + E8.2 + E9.2 + E10m.12 + E12m.10 + E6.2(12m.10))	023 504
4	Slider	241 694	503	Circlip	021 020
5	Stop point	241 368	504	Countersunk screw M4x10	241 914

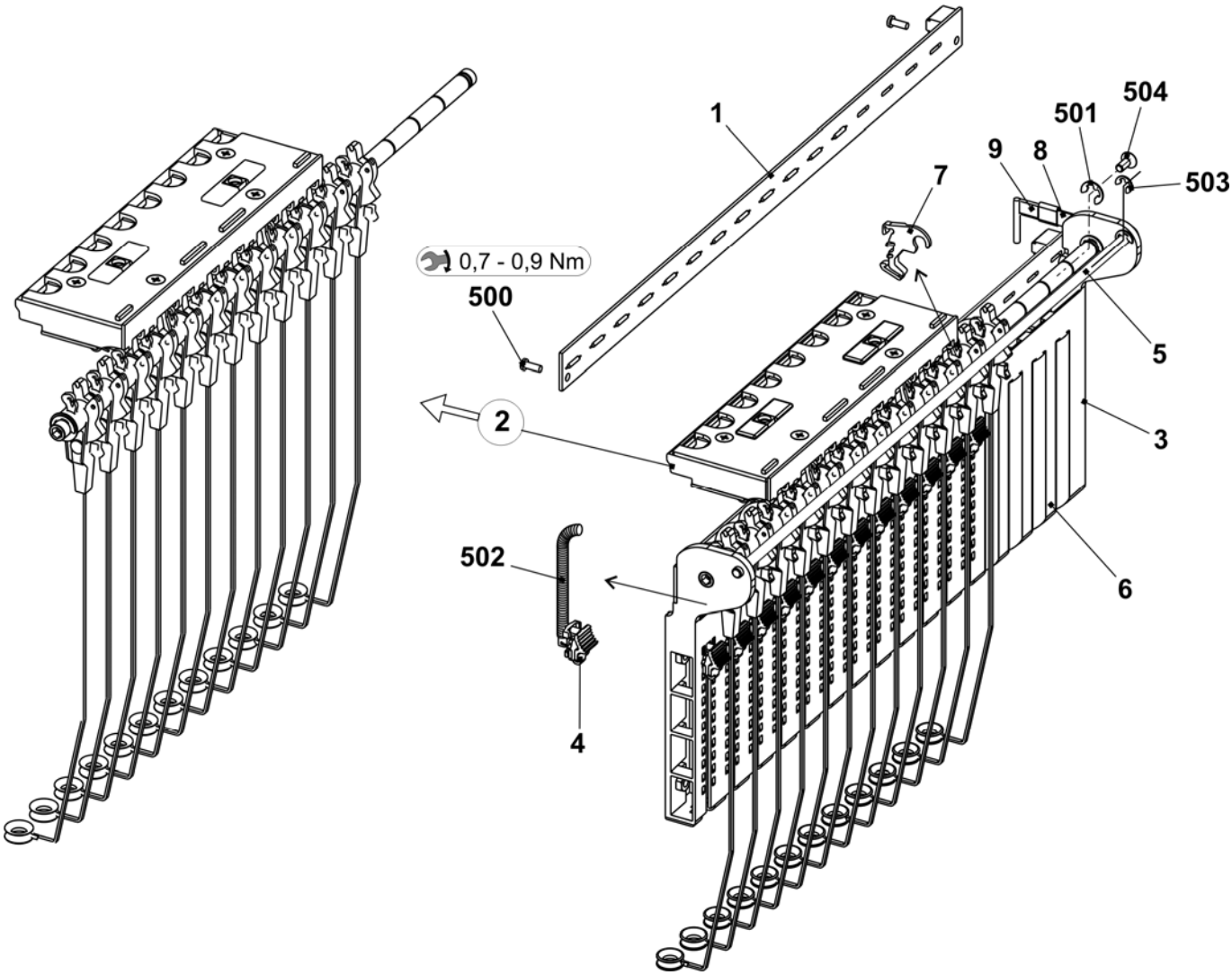

Right tension axle

Pos	Designation	Ident No
Σ	**Tension axle on the right complete**	
	E3 – E8 + E2,5.2 + E3,5.2 + E5.2 + E6.2 + E5m.4 + E7m.5 + E7m.8 + E8m.7	**241 379**
	E10 - E18 + E7.2 + E8.2 + E9.2 + E10m.12 + E12m.10 + E6.2(12m.10)	**241 380**
1	Axle	243 107
2	Tension arm pre-assembled	
	E3 - E8 + E2,5.2 + E3,5.2 + E5.2 + E6.2 + E5m.4 + E7m.5 + E7m.8 + E8m.7	242 770
	E10 - E18 + E7.2 + E8.2 + E9.2 + E10m.12 + E12m.10 + E6.2(12m.10)	242 771
6	Wire bow	238 694
500	Shim ring 8x14x0.5	023 501
501	Circlip	021 022

Pos	Designation	Ident No
502	Grooved pin 2x6	243 172
5	**Thread clamp AKF**	**238 695**
51	Housing AKF	238 689
52	Cover AKF	237 926
53	Sheet metal at the bottom (housing AKF)	240 719
54	Lever AKF	238 692
55	Thrust piece AKF	238 690
56	Slider AKF	238 691
57	Wire bow	238 694
58	Wire	237 940
551	Screw KB 35x12	237 681
552	Screw KB 40x8	236 227
553	Compression spring 0.30x4.50x18.50	241 437
554	Grooved pin 2x6	243 172

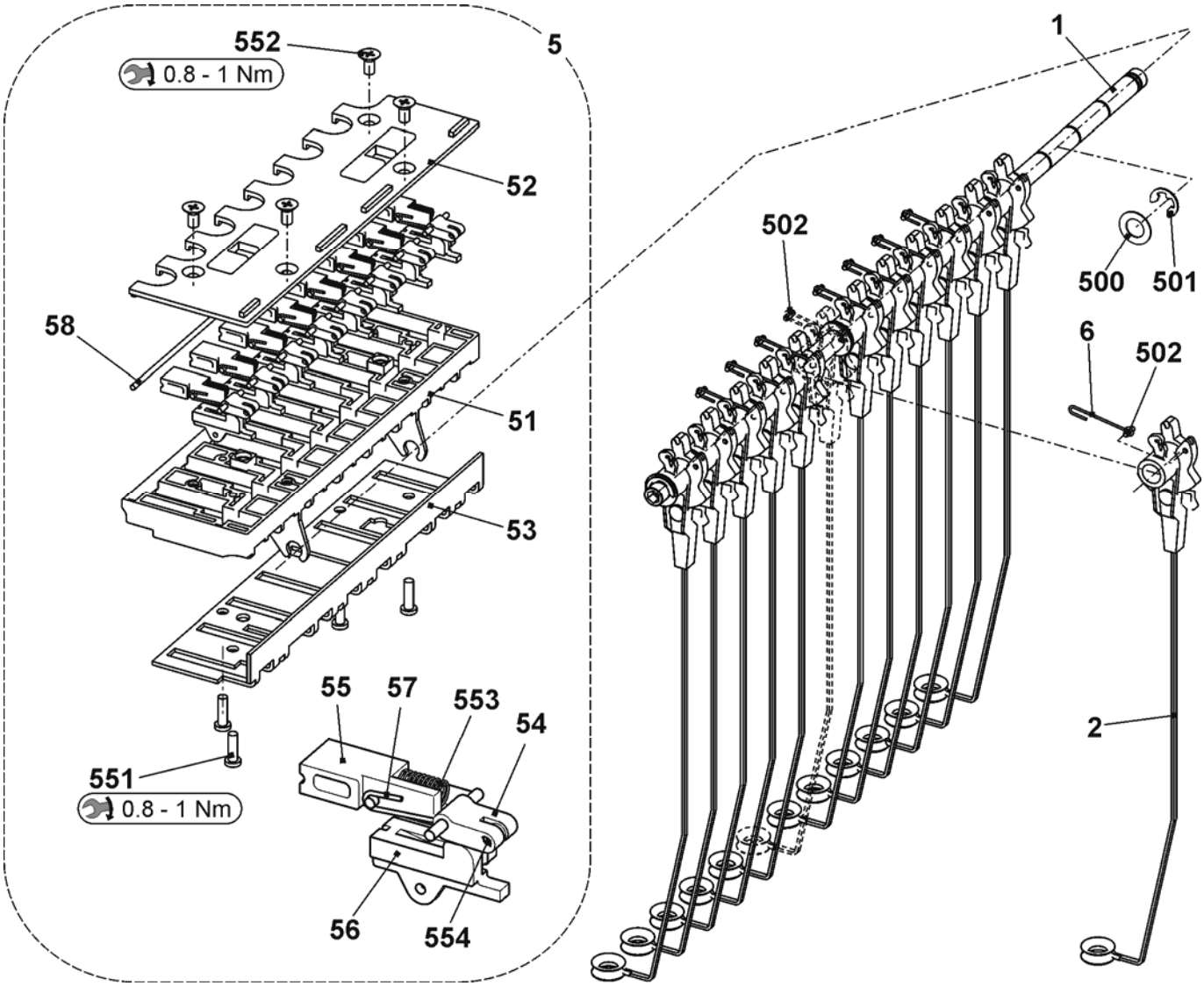

Bobbin board

Pos	Designation		Ident No		Pos	Designation		Ident No
Σ	**Table complete 84" (E5-14)**		**240 681**					
	Table complete 84" without feed wheel support		**251 358**			14d	Lamp support	221 951
1	Table		251 246		15	Positioning pin		251 050
4	Support element		228 594		20	Energy chain display (38 links)		235 518
7	Magnet switch protective hood		219 983		37	Cable USB extension 84 OKC		243 070
8	Magnet switch protective hood		220 159		42	Support of left feed wheel		250 966
10	Guide rail at the top complete		240 684		43	Support of right feed wheel		250 967
14	Lamp at the top complete		236 693		40	Sliding block		228 851
	14a	Lamp long RL60V - 230 V	212 580		504	Countersunk screw M8x16		023 113
	14b	Clamping bow	209 504		516	Countersunk screw M3x8		023 251
	14c	Cellular caoutchouc 40x20	208 018		518	Countersunk screw M8x18		251 331

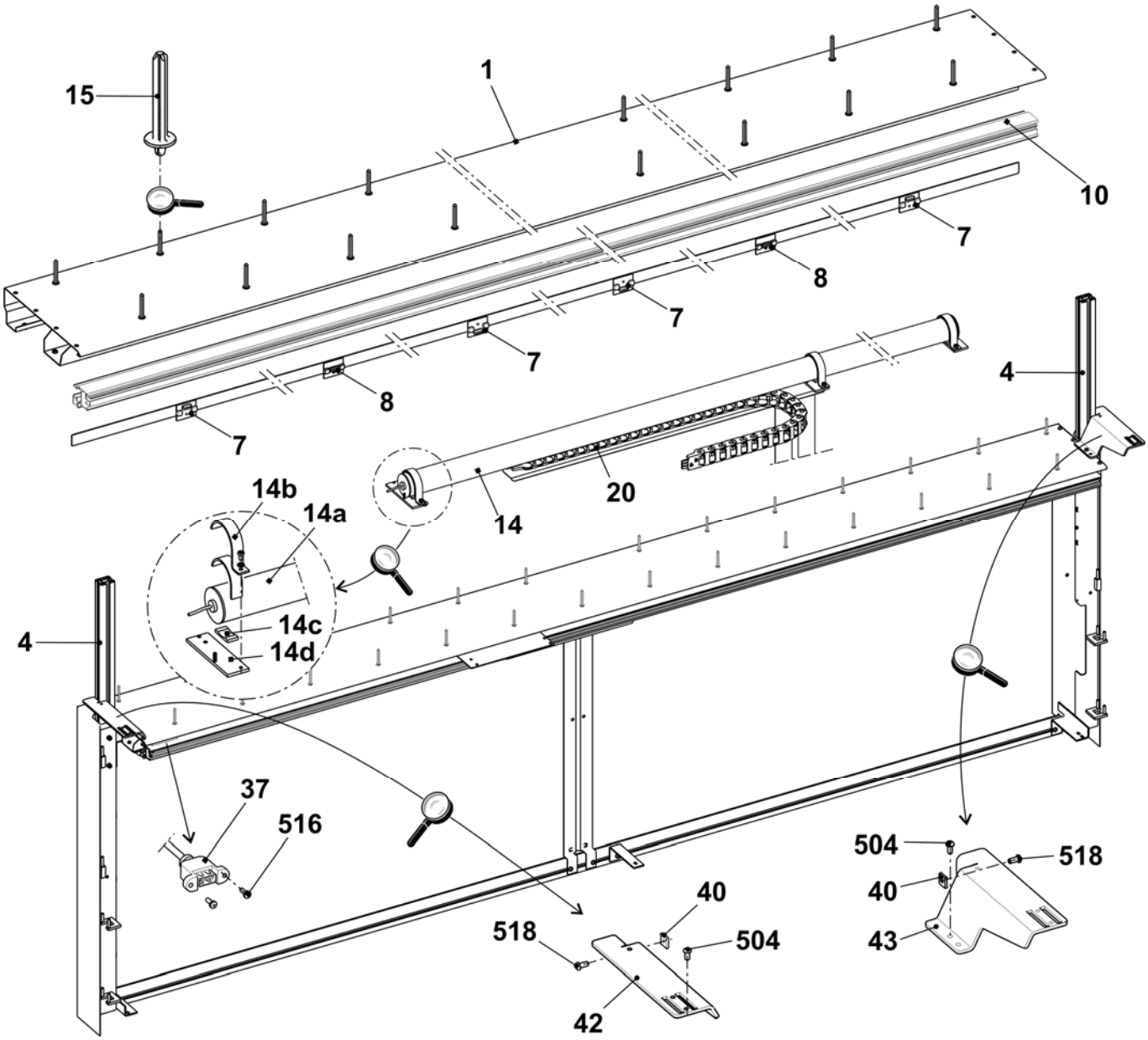

Yarn carrier and guide rails

Pos	Designation	Ident No
Σ	**Yarn guide complete E5**	**244 007**
	Yarn guide complete E7 – E8	**244 008**
	Yarn guide complete E10 – E14	**244 009**
	Yarn guide complete E16 – E18	**244 002**
5	Limiter on the left complete	244 099
6	Limiter on the right complete	244 098
7	Slider with eyelet	230 709
9	Yarn carrier bar 50“	240 282
10	YC carriage complete	243 062
11	Yarn guide wheel complete	209 257
13	Shim	213 035
500	Hexagon screw M5x10	020 351

Pos	Designation	Ident No
E5, E5m.4 + E7m.5, E2,5.2 + E3,5.2 +E5.2		
1	YC bow 1+8 complete E5	212 990
2	YC bow 2+7 complete E5	212 992
3	YC bow 3+6 complete E5	212 991
4	YC bow 4+5 complete E5	212 993
E7 + E8, E6.2 + E7.2		
1	YC bow 1+8 complete E7-8	212 892
2	YC bow 2+7 complete E7-8	212 914
3	YC bow 3+6 complete E7-8	212 925
4	YC bow 4+5 complete E7-8	212 910
E10 - E14, E10m.12 + E14/12, E6.2 (E12M.10) + E8.2		
1	YC bow 1+8 complete E10-14	212 994
2	YC bow 2+7 complete E10-14	212 996
3	YC bow 3+6 complete E10-14	212 995
4	YC bow 4+5 complete E10-14	212 997
E16 + E18, E9.2		
1	YC bow 1+8 complete E1-18	223 199
2	YC bow 2+7 complete E1-18	223 201
3	YC bow 3+6 complete E1-18	223 200
4	YC bow 4+5 complete E1-18	223 202

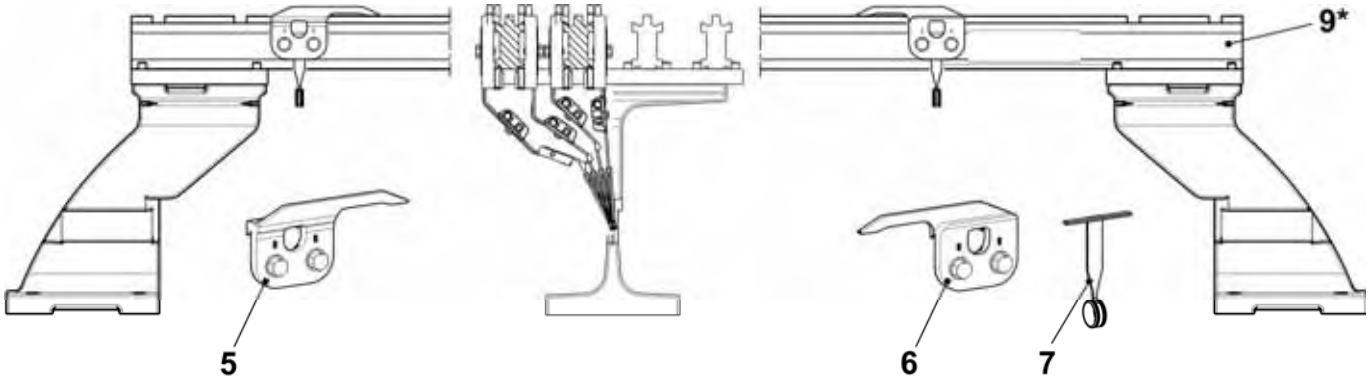

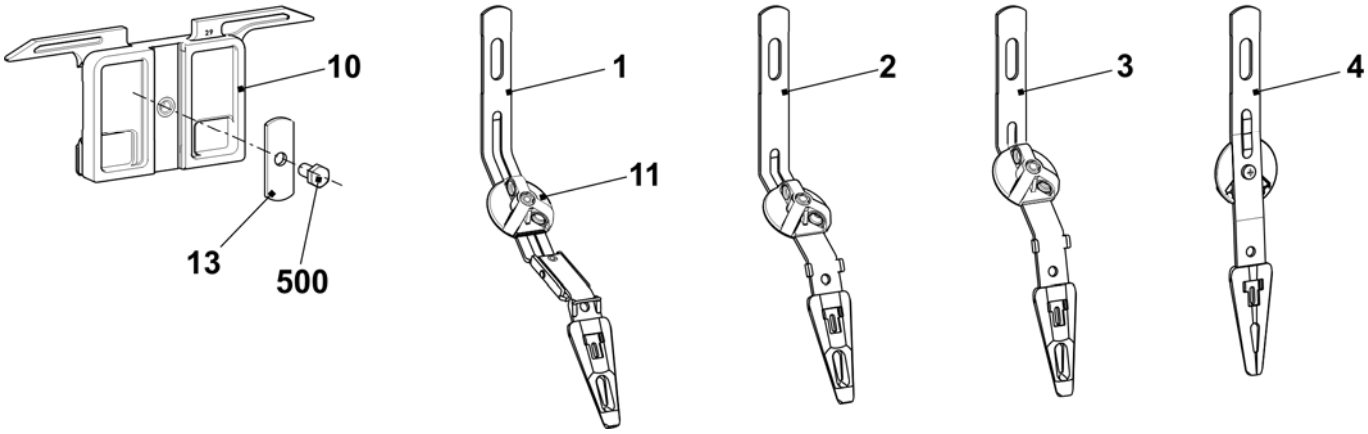

Complete yarn carriers

Pos	Designation	Track	Ident No	Pos	Designation	Track	Ident No
E5, E5m.4 + E7m.5, E2,5.2 + E3,5.2 +E5.2				**E10 - E14, E10m.12, E6.2 (E12M.10) + E8.2**			
1	YC carriage complete E5	1+8	243 935	1	YC carriage complete E10-14	1+8	243 943
2	YC carriage complete E5	2+7	243 934	2	YC carriage complete E10-14	2+7	243 942
3	YC carriage complete E5	3+6	243 933	3	YC carriage complete E10-14	3+6	243 941
4	YC carriage complete E5	4+5	243 932	4	YC carriage complete E10-14	4+5	243 940
E7 + E8, E6.2 + E7.2 + E7m.8 + E8m.7				**E16 + E18**			
1	YC carriage complete E7-8	1+8	243 939	1	YC carriage complete E16-18	1+8	243 947
2	YC carriage complete E7-8	2+7	243 938	2	YC carriage complete E16-18	2+7	243 946
3	YC carriage complete E7-8	3+6	243 937	3	YC carriage complete E16-18	3+6	243 945
4	YC carriage complete E7-8	4+5	243 936	4	YC carriage complete E16-18	4+5	243 944

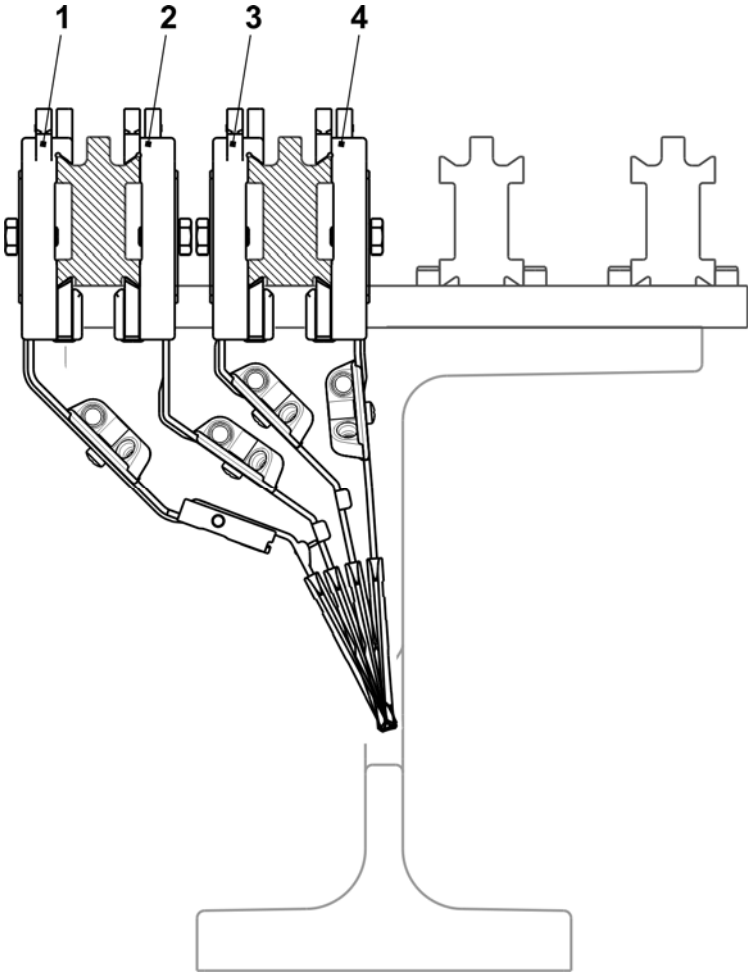

STOLL
THE RIGHT WAY TO KNIT

Left friction feed wheel

Pos	Designation		Ident No	Pos	Designation	Ident No
Σ	**Friction feed wheel on the left complete**		**243 571**	13	Bush	221 391
1	Housing		240 368	14	Ribbed V-belt pulley	221 268
2	Friction roller complete		231 704	15	Ribbed V-belt pulley V3J 406	206 927
3	Three-phase AC motor complete		219 800	16	Rod	221 319
	3a	Microswitch	008 664	17	Supporting plate	251 096
4	Deflector complete 8-fold		250 089	18	Cover	230 758
	4a	Support rail	250 055	19	Knurled screw	223 361
	4b	Eyelet holder complete	250 077	20	Rod	230 658
	540	Spring dowel sleeve 4x15	020 783	500	Screw KB30x8	236 228
	541	Hexagon nut M8-8	022 843	501	Screw 20x10	244 736
7	Yarn guide rod complete		239 431	503	Cap screw M5x12	020 132
	570	Eyelet 8	021 504	504	Cap screw M5x16	022 726
8	Stop motion rail on the right complete		230 690	506	Screw KB 40x14	241 358
9	Stop motion rail on the left complete with eyelets		230 683	507	Screw KB 40x25	241 595
	9b	Eyelet	230 662	509	Washer 5.3x22x2.5	023 219
	590	Slide bearing	023 627	510	Washer	020 901
	591	O-ring	244 895	512	Adjusting washer 15x21x1	023 216
11	Strap		221 316	514	Washer 4.3	020 908
12	Cover		251 098	515	Countersunk screw M4x10	023 450

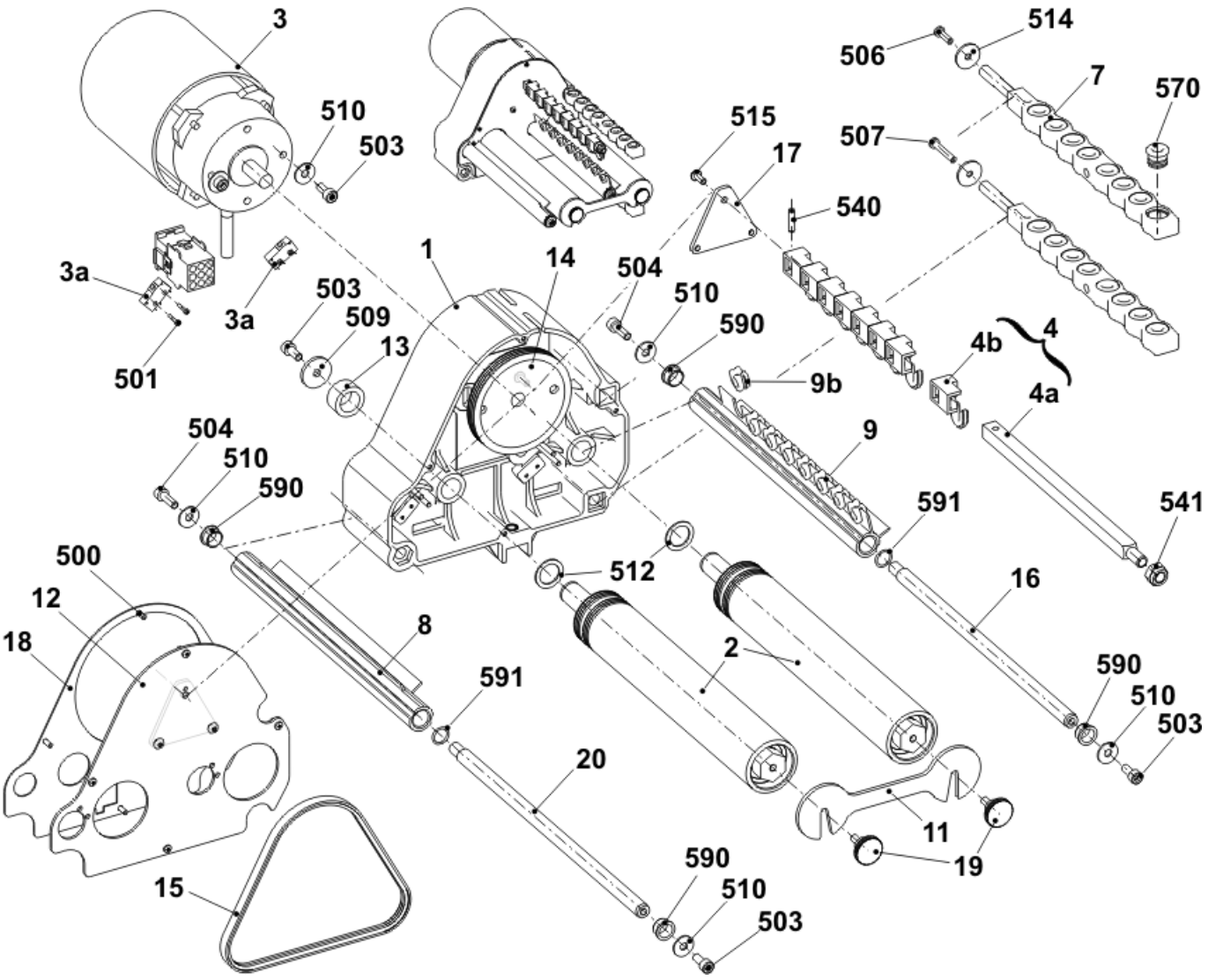

Right friction feed wheel

Pos	Designation		Ident No	Pos	Designation	Ident No
Σ	**Friction feed wheel on the right complete**		**243 572**	13	Bush	221 391
1	Housing		240 368	14	Ribbed V-belt pulley	221 268
2	Friction roller complete		231 704	15	Ribbed V-belt pulley V3J 406	206 927
3	Three-phase AC motor complete		219 800	16	Rod	221 319
	3a	Microswitch	008 664	17	Supporting plate	251 096
4	Deflector complete 8-fold		250 089	18	Cover	230 758
	4a	Support rail	250 055	19	Knurled screw	223 361
	4b	Eyelet holder complete	250 077	20	Rod	230 658
	540	Spring dowel sleeve 4x15	020 783	500	Screw KB30x8	236 228
	541	Hexagon nut M8-8	022 843	501	Screw 20x10	244 736
7	Yarn guide rod complete		239 431	503	Cap screw M5x12	020 132
	570	Eyelet 8	021 504	504	Cap screw M5x16	022 726
8	Stop motion rail on the right complete		230 690	506	Screw KB 40x14	241 358
9	Stop motion rail on the right complete with eyelets		230 682	507	Screw KB 40x25	241 595
	9b	Eyelet	230 662	509	Washer 5.3x22x2.5	023 219
	590	Slide bearing	023 627	510	Washer	020 901
	591	O-ring	244 895	512	Adjusting washer 15x21x1	023 216
11	Strap		221 316	514	Washer 4.3	020 908
12	Cover		251 098	515	Countersunk screw M4x10	023 450

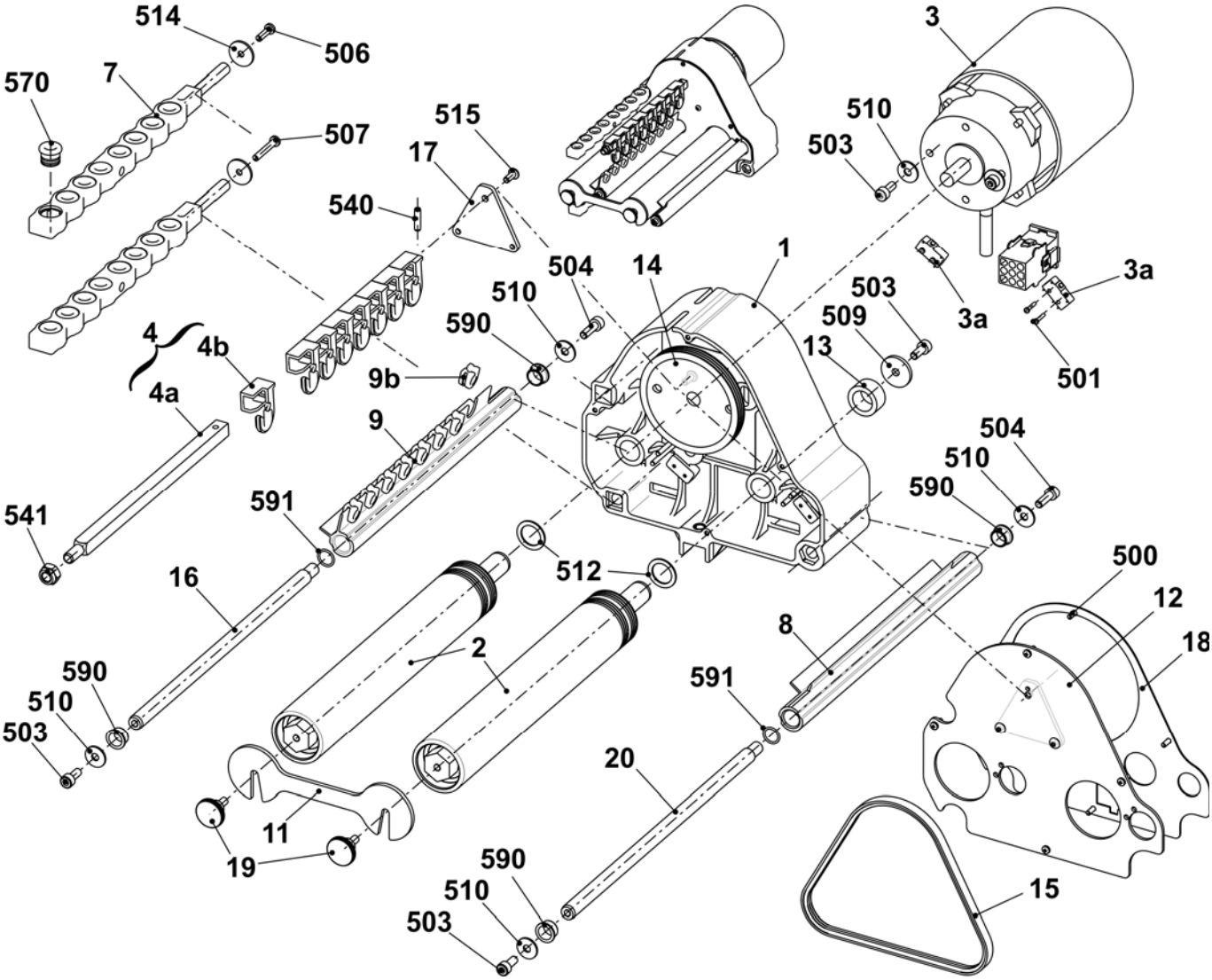

Feed wheel SFE

Pos	Designation	Ident No	Note
Σ	**Mounted set storage feed wheel SFE**	**231 427**	Please order the SFE spare parts at: **MEMMINGER-IRO GMBH** **Jakob-Mutz-Strasse 7** **D-72280 Dornstetten** Phone: +49 (0)7443 281-0 Fax: +49 (0)7443 281-101 The item no. and the designation for the SFE spare parts can be found in the enclosed assembling instructions of the company MEMMINGER-IRO.
1	Mounted set SFE without transformer	231 980	
2	Transfo with cable	231 979	

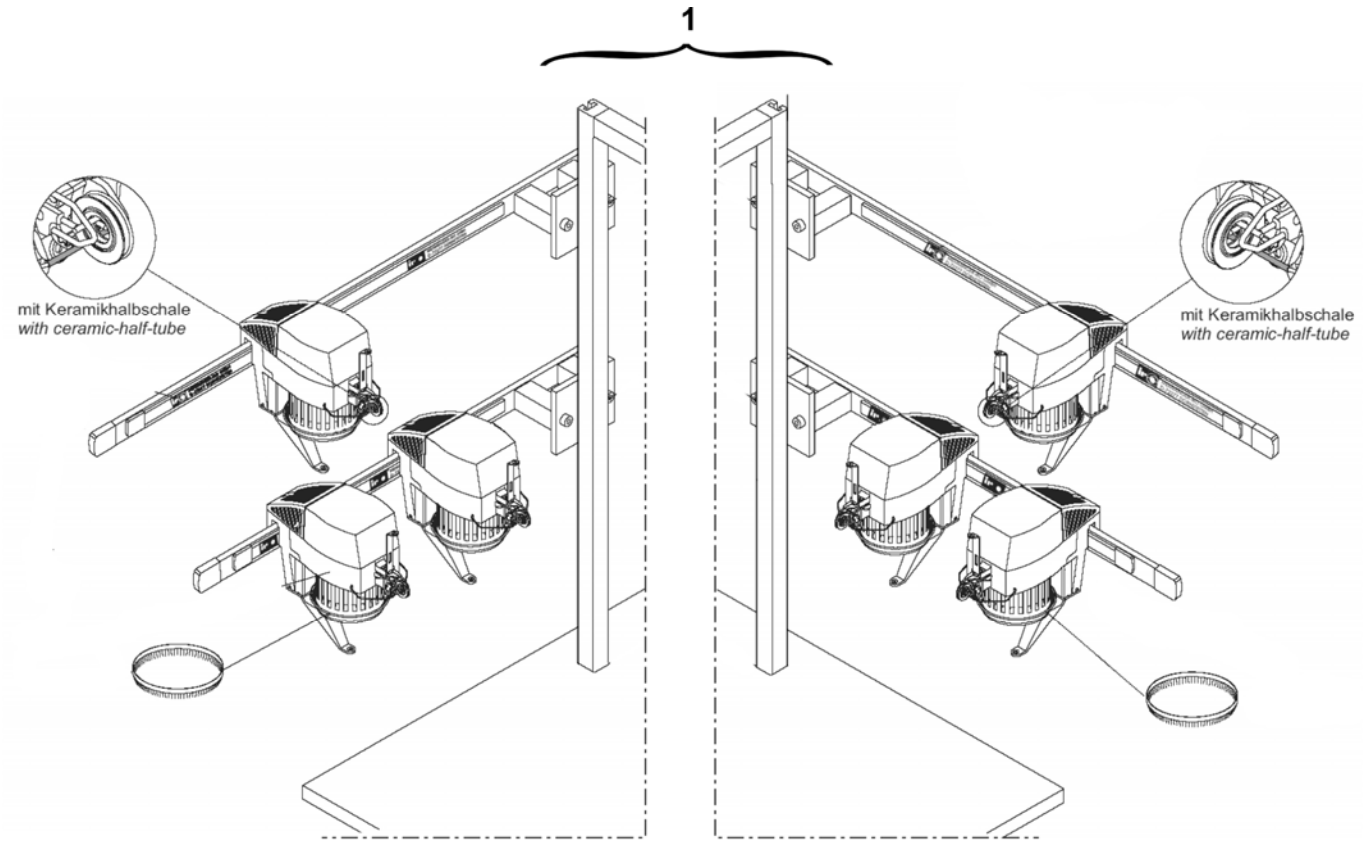

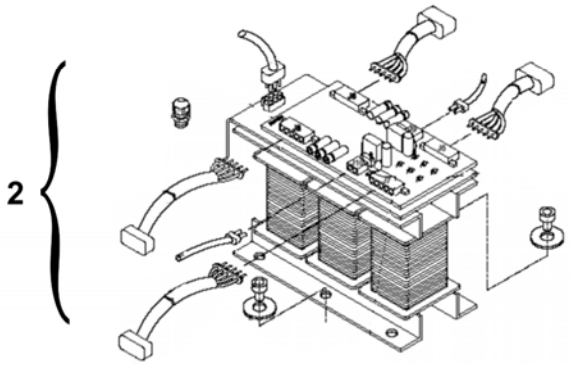

Fluff absorption

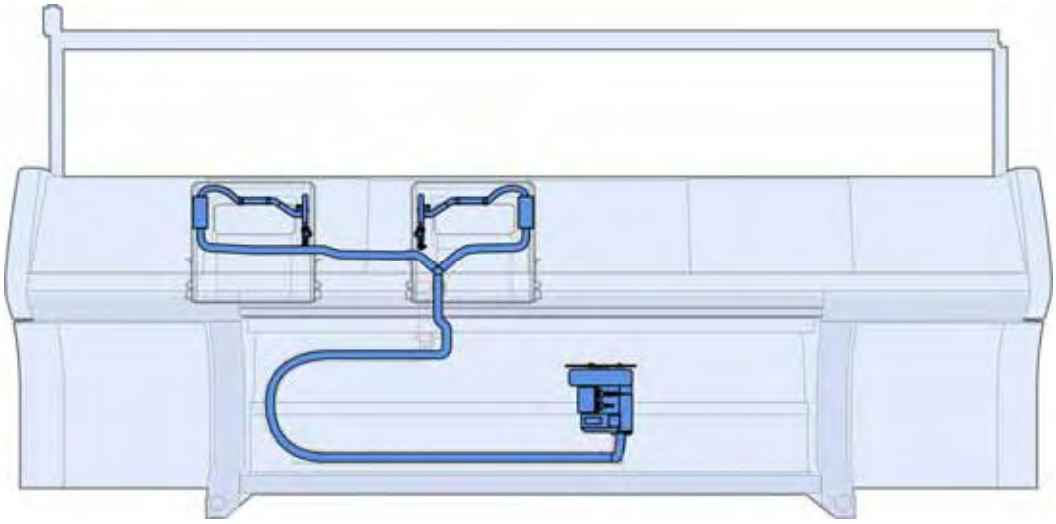

Fluff absorption

Pos	Designation	Ident No		Pos	Designation	Ident No
Σ	**Fluff absorption**					
1	Suction fan complete	251 332		7	Suction hose 29x25x1350	251 347
2	Suction hose 29x25x3150	252 747		8	Suction hose 29x25x350	252 746
3	Hose connector	245 011		9	Hose fitting	214 653
4	Lint container	245 024		550	Countersunk head screw M4x8	251 011
5	Set of tubes on the left complete 822	251 343		551	Cap screw M4x8	022 501
6	Set of tubes on the right complete 822	251 344				

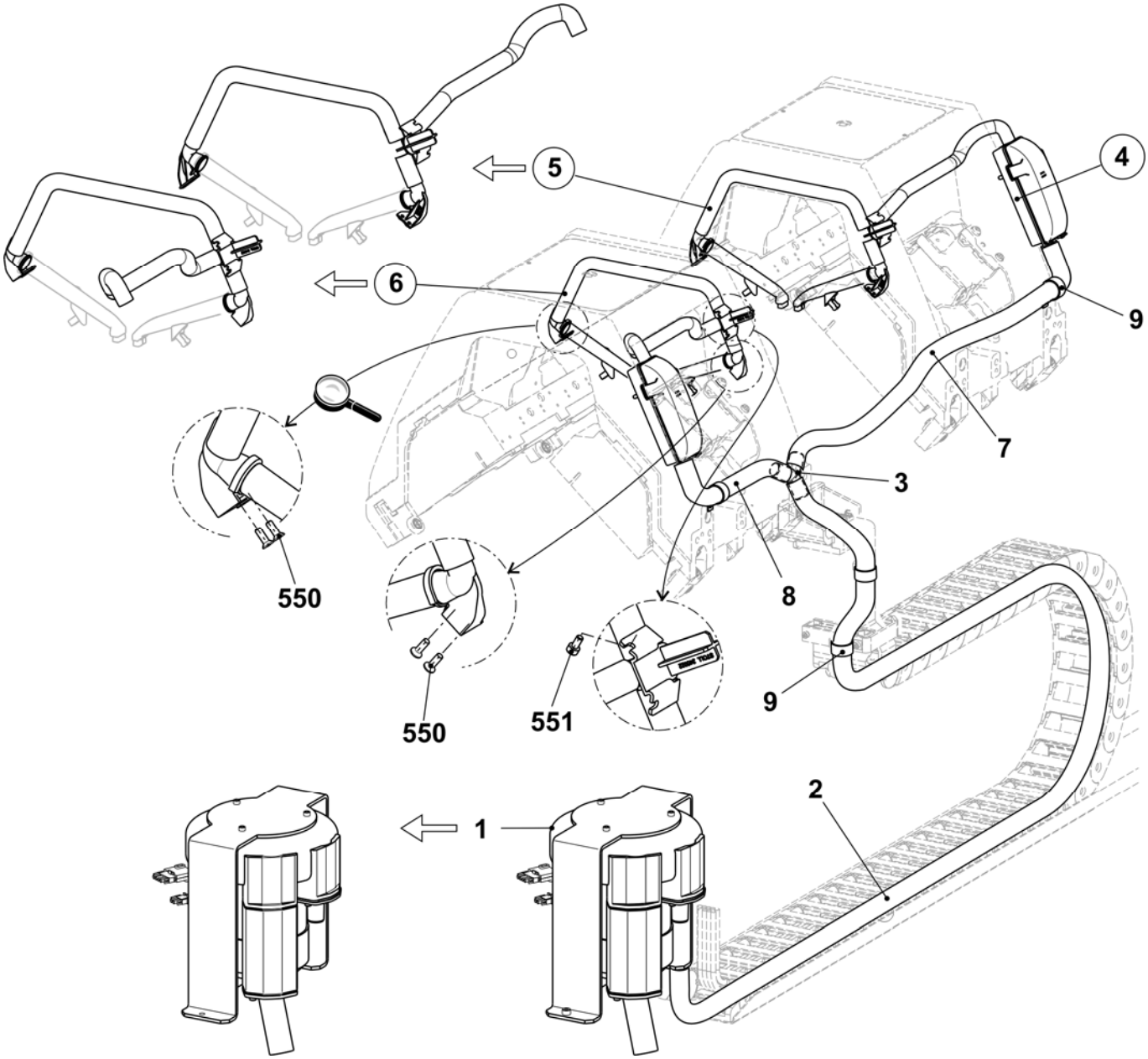

Lint container

Pos	*Designation*	*Ident No*		*Pos*	*Designation*	*Ident No*
Σ	**Lint container**			6*	Sealing plug	245 029
1	Lint container	245 024		10*	Cover with filter	251 335
5*	Sealing plug	245 028		501*	Cap screw M6x10	023 690

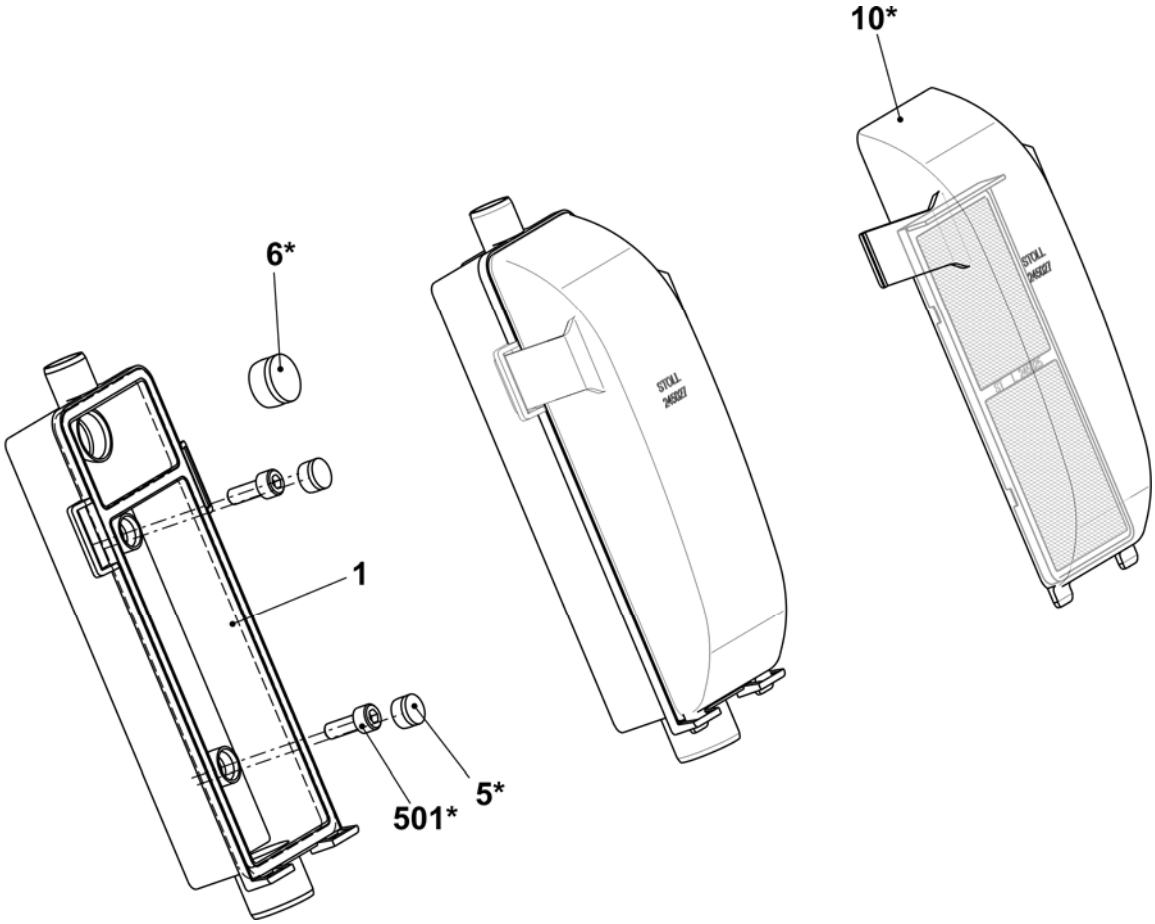

Set of tubes on the left and right

Pos	*Designation*	*Ident No*	*Pos*	*Designation*		*Ident No*
L	**Set of tubes on the left complete 822**	**251 343**	7*	Suction tube complete (E5-14)		251 312
R	**Set of tubes on the right complete 822**	**251 344**		Suction tube complete (E16-18)		251 313
1	Angle connection on the right	250 121		7a*	Suction tube	250 120
2	Angle connection on the left	251 101		7b*	Bracket	250 805
3	Connection piece Flent	245 022		7c*	Brush (E5-14)	251 041
500	Suction hose 20x16x440	244 983			Brush (E16-18)	251 042
501	Suction hose 20x16x40	251 043	504*	Countersunk head screw M4x8		251 011
502	Suction hose 20x16x420	251 045	506*	Cable clip		250 051
			531*	Cap screw M4x8		022 501

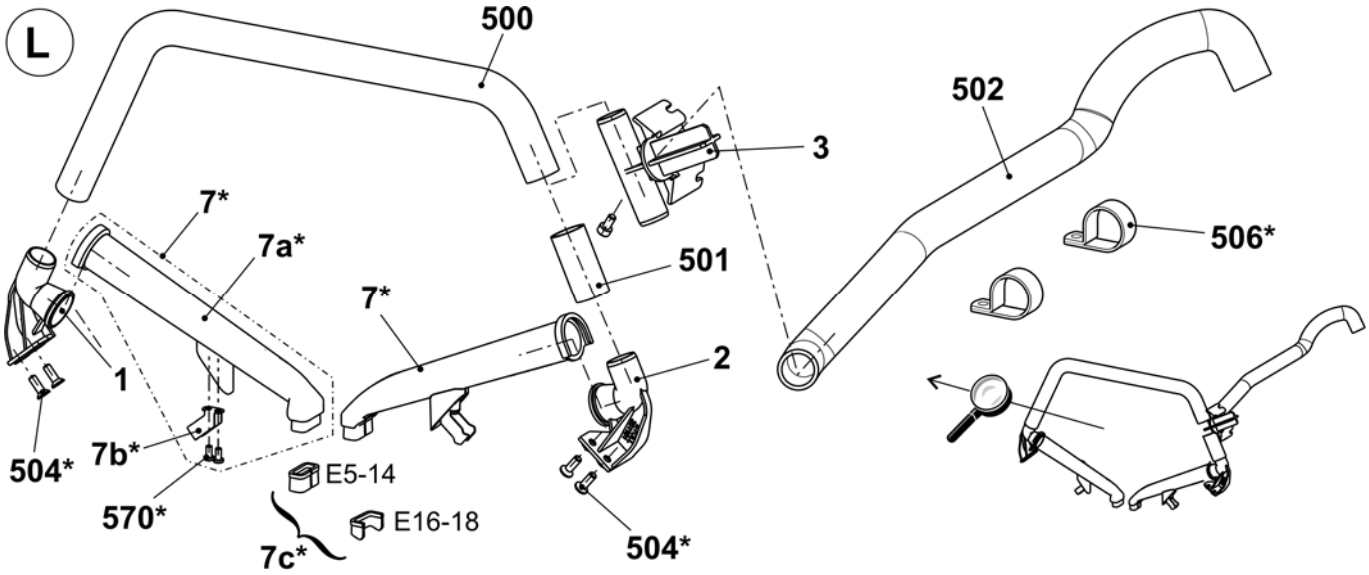

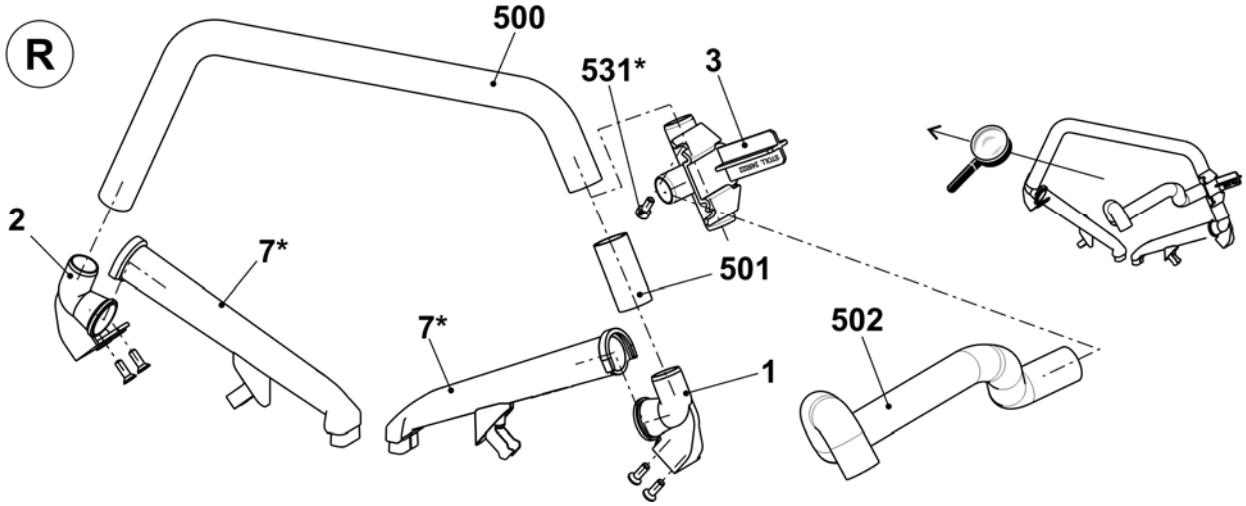

Operation and control

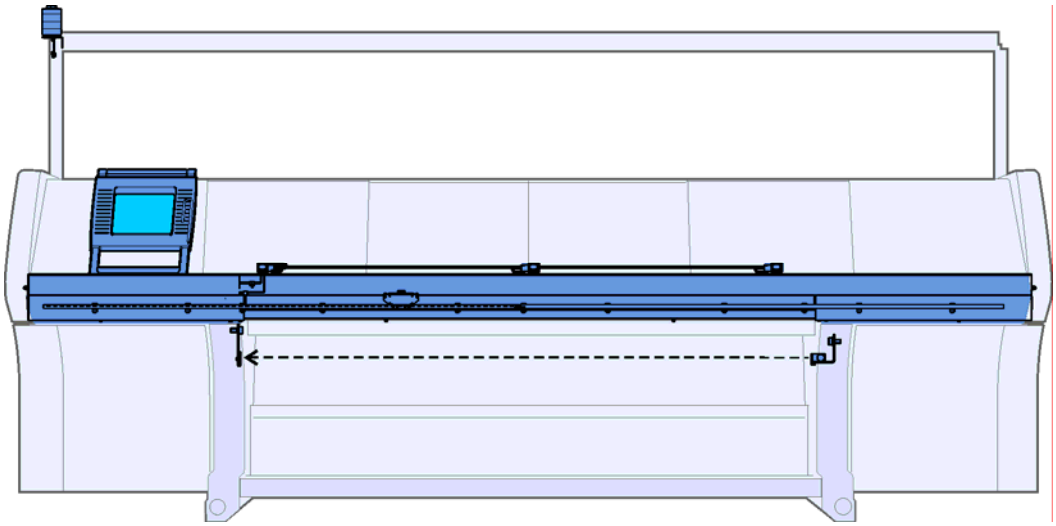

Input unit

Pos	Designation	Ident No	Pos	Designation	Ident No
Σ	**Input unit complete**	**240 194**			
1	Base frame	240 195	6	Touch pen	242 812
3	Bearing strip complete	240 198	502	Washer	020 901
4	Display touch complete	250 298	503	Screw KB 50x12	240 359

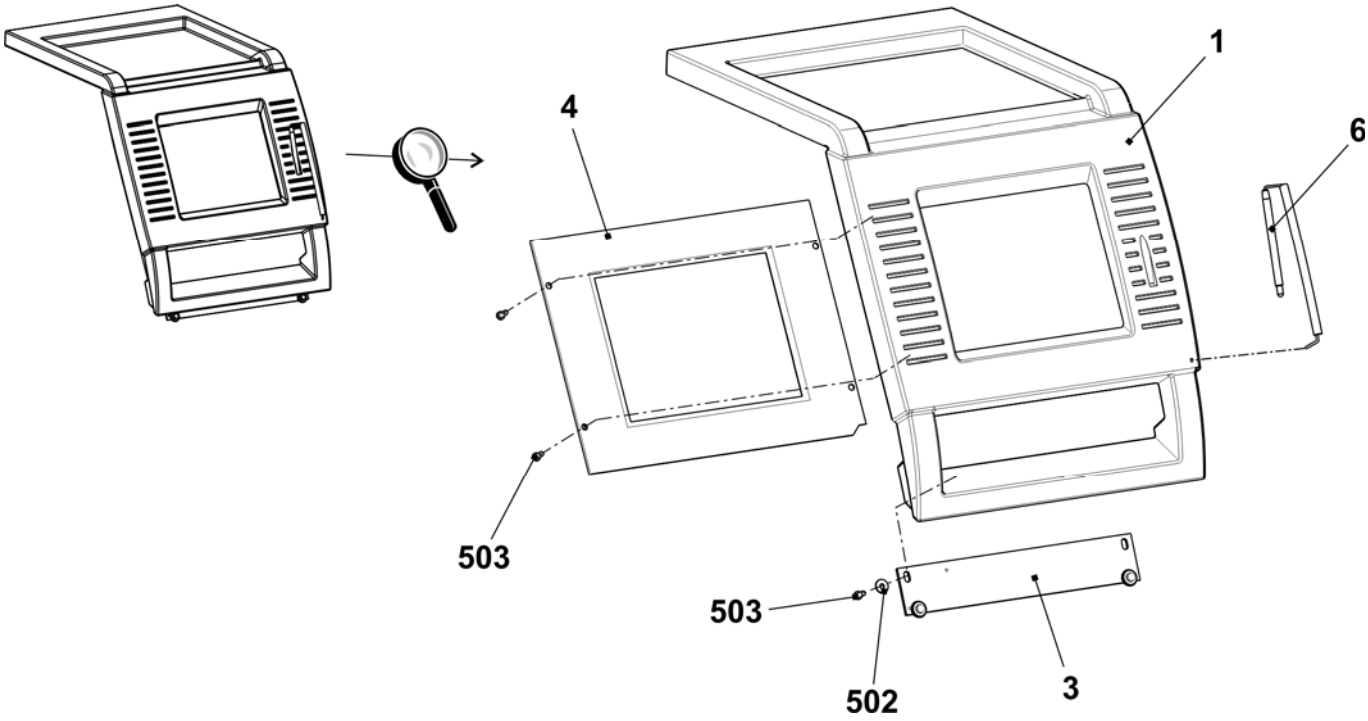

Starting unit

Pos	Designation	Ident No		Pos	Designation	Ident No
Σ	**Starting unit complete**	241 039				
1	Engaging rod	241 030		502	Cap screw M6x16	020 135
2	Bearing on the left complete	250 071		503	Countersunk screw M5x14	023 588
3	Guide rail at the bottom complete	251 227		504	Cap screw M6x20-12.9	020 136
6	Cover plate on the right	251 216		505	Cap screw M6x12	020 134
7	Cover plate on the left	251 217		507	Washer	020 872
8	Fixing bolt	219 107		509	Screw M6x25	023 510
9	Switch with cable to protective hoods	223 350		511	Adhesive base	243 055
10	Sliding nut (sliding block)	225 099		512	Cap screw M6x10	023 690
11	Bearing on the right complete	225 964		520*	Countersunk screw M6x16	023 124

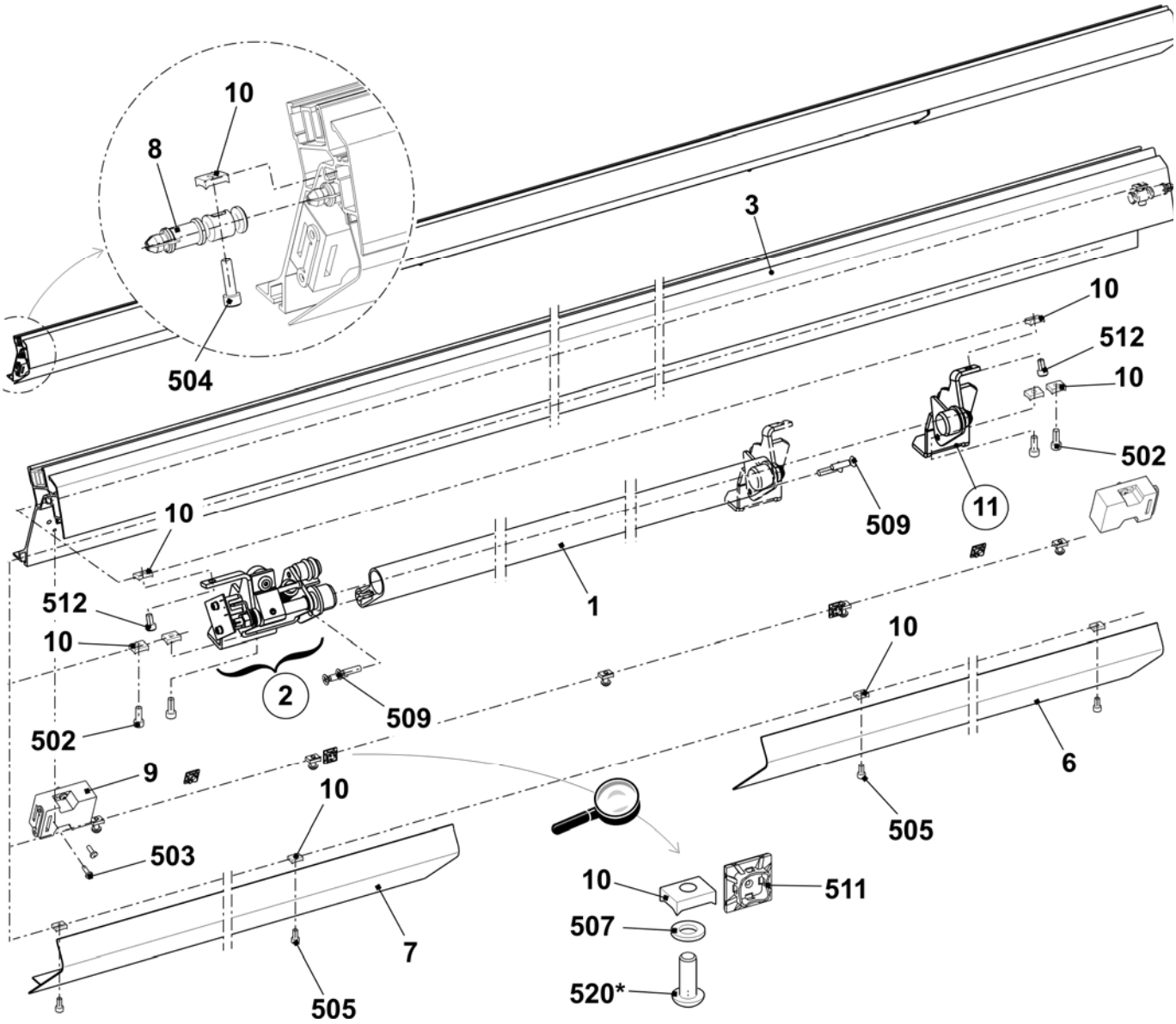

Bearing of the engaging rod

Pos	Designation	Ident No	Pos	Designation	Ident No
L	**Bearing on the left complete**	**250 071**			
1	Bearing on the left	245 218	505	Hexagon nut M8-6	020 838
	1a Clip bearing MCM12-04	023 639	506	Dowel pin 1.5x8	236 923
2	Support buffer	220 561	507	Spring dowel sleeve 6x20	023 719
	2a O-ring 14x4	023 237	508	Shoulder screw M4x24.8x7.7	240 299
3	Shaft on the left	245 219	509	Shoulder screw	251 316
4	Rotor	245 223	510	Shim ring 12x18x1	023 315
5	Switch flag	245 220	511	Locking ring 12x1	020 951
6	Spring pin	251 340	512	Compression spring 1.25x15x98.2	023 609
7	Disc	245 222	513	Compression spring 0.5x11x12	251 369
8	Shoulder screw	245 224			
9	Distance bolt	240 287	**R**	**Bearing on the right complete**	**252 964**
500	Cap screw M4x6	023 067	1	Bearing on the right	240 230
501	Cap screw M4x8	022 501		1a Clip bearing MCM 12-04	023 639
502	Shim ring 4x8x1	023 369	2	Shaft on the right	242 888
503	Card engaging OKC	240 167	500	Shim ring 12x18x1	023 315
504	Adhesive magnet direct current	026 233	502	Locking ring 12x1	020 951

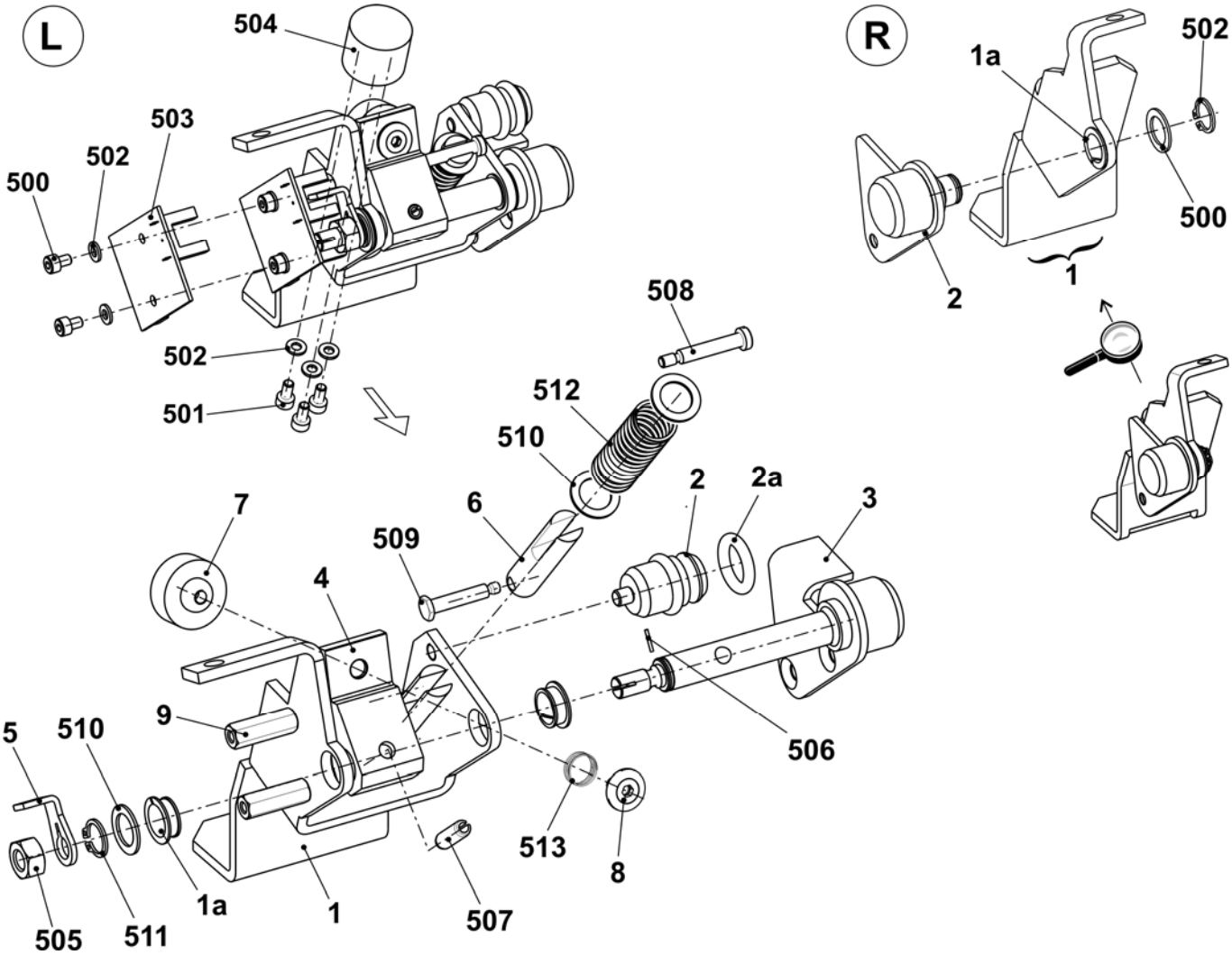

Signal light

Pos	Designation		Ident No		Pos	Designation	Ident No
Σ	**Signal light LED single lamp with horn**		**251 153**				
	500	Countersunk screw M4x14	023 037				
	501	Serrated lock washer A4.3-FS	022 482				

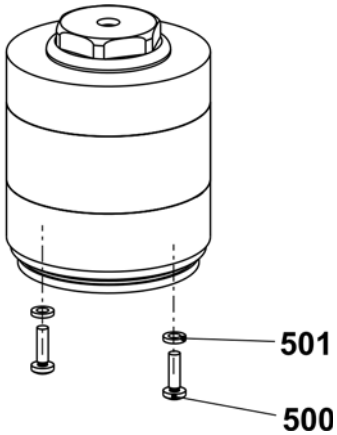

Collecting area - control

Pos	Designation	Ident No	Pos	Designation	Ident No
Σ	**Collecting area - control**	**240 157**	504	Photoelectric sensor WI100-P4330	243 355
1	Angle support photoelectric sensor	243 353	505	Reflector 20x20 mm	243 356
2	Mounting plate reflector	243 354	900	Cap screw M6x12	020 134
501	Cap screw M3x10	022 991	901	Washer	020 872
502	Blind rivet A3x8-Al	023 158			

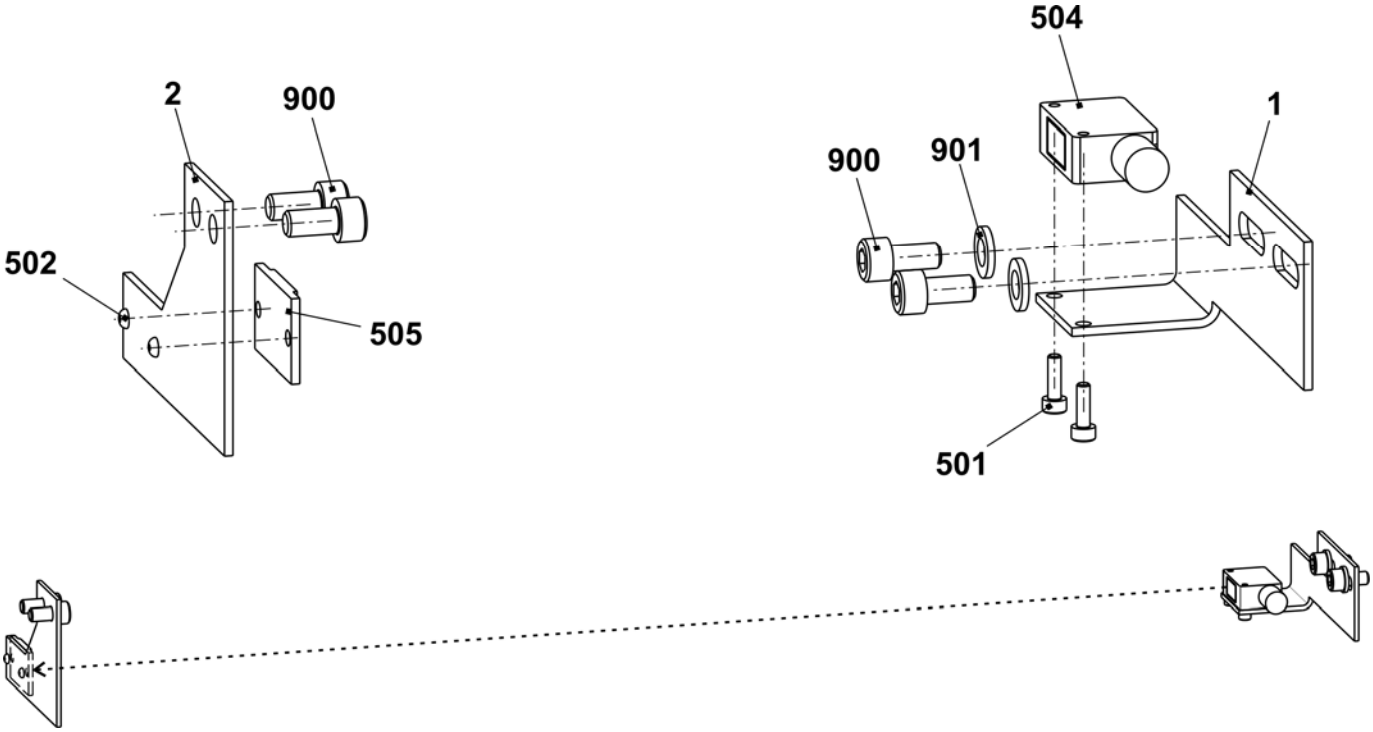

Shock stop motion E5-14

Pos	*Designation*	*Ident No*		*Pos*	*Designation*	*Ident No*
Σ	**Shock stop motion complete E5 - E14**	**223 947**		3	End plug piezo sensor	220 053
1	Shock stop motion (Piezo)	220 011		500	Countersunk screw M4x8	023 036
2	Connecting cable piezo sensor	220 061		502	Cable clip N-3B, 5 mm	210 729

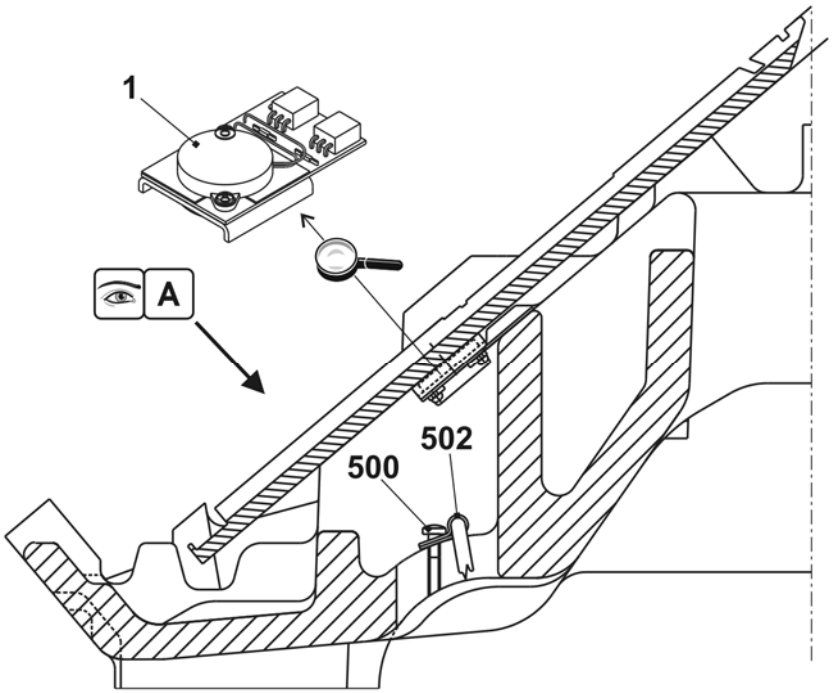

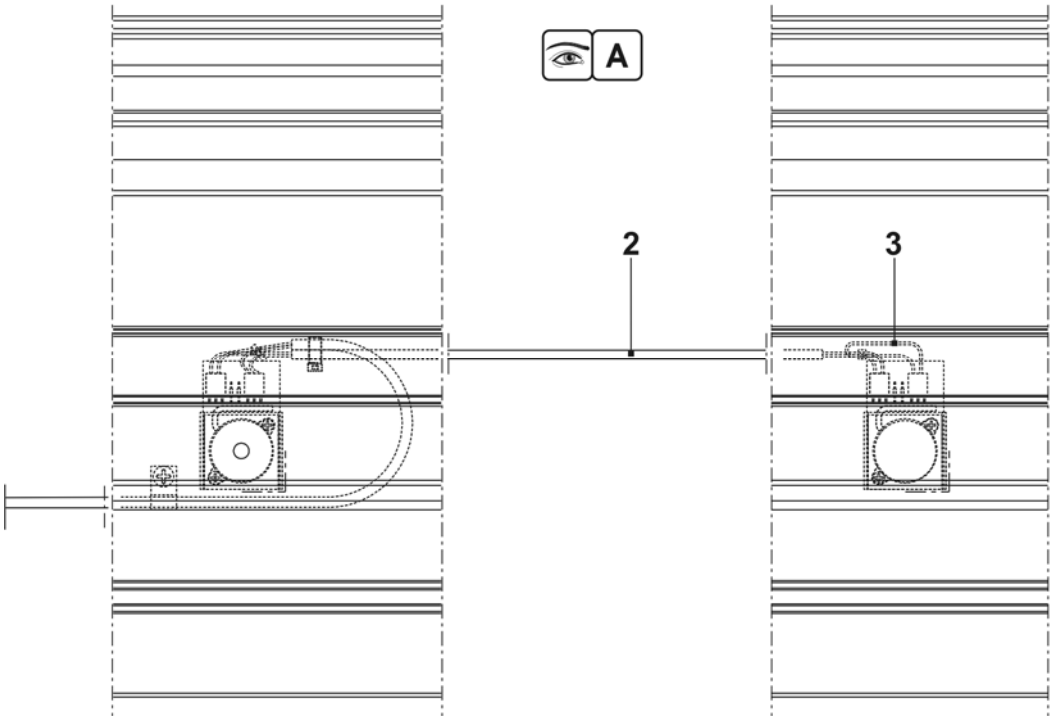

Shock stop motion E16-18

Pos	Designation	Ident No	Pos	Designation	Ident No
Σ	**Shock stop motion complete E16 – E18**	**250 386**			
1	Shock stop motion (Piezo)	220 011	4	Cable connection piezo	250 292
2	Cable connection piezo	250 293	500	Countersunk screw M4x8	023 036
3	End plug piezo sensor	220 053	502	Cable clip N-3B, 5 mm	210 729

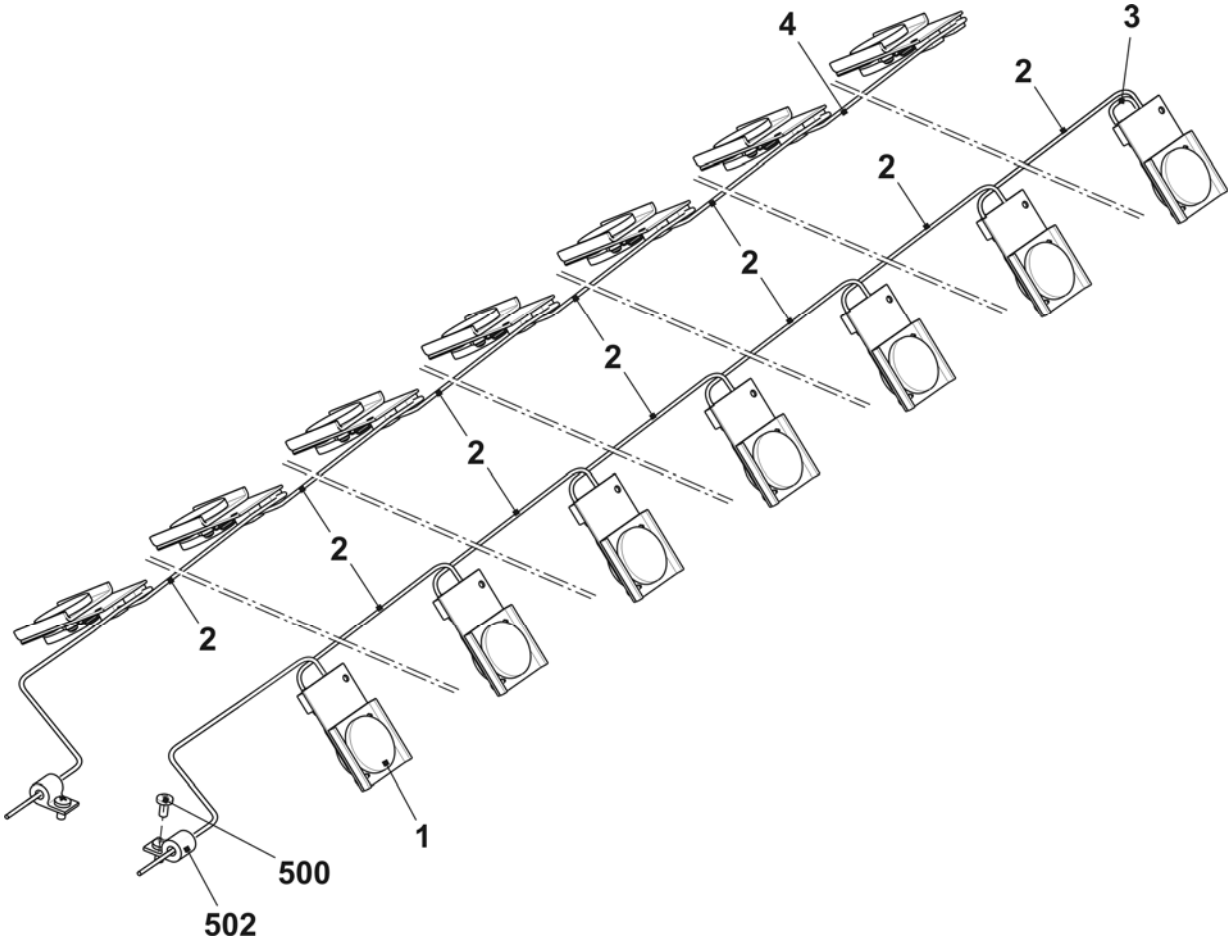

Measuring device

Pos	*Designation*		*Ident No*		*Pos*	*Designation*	*Ident No*
Σ	**Measuring device**		**242 221**		5*	Measuring head complete	240 562
	1	Measuring bar	241 804				
	2	Guidance	212 210				
	4	Guidance	240 672				
	501	Washer	020 881				
	502	Countersunk screw	241 603				

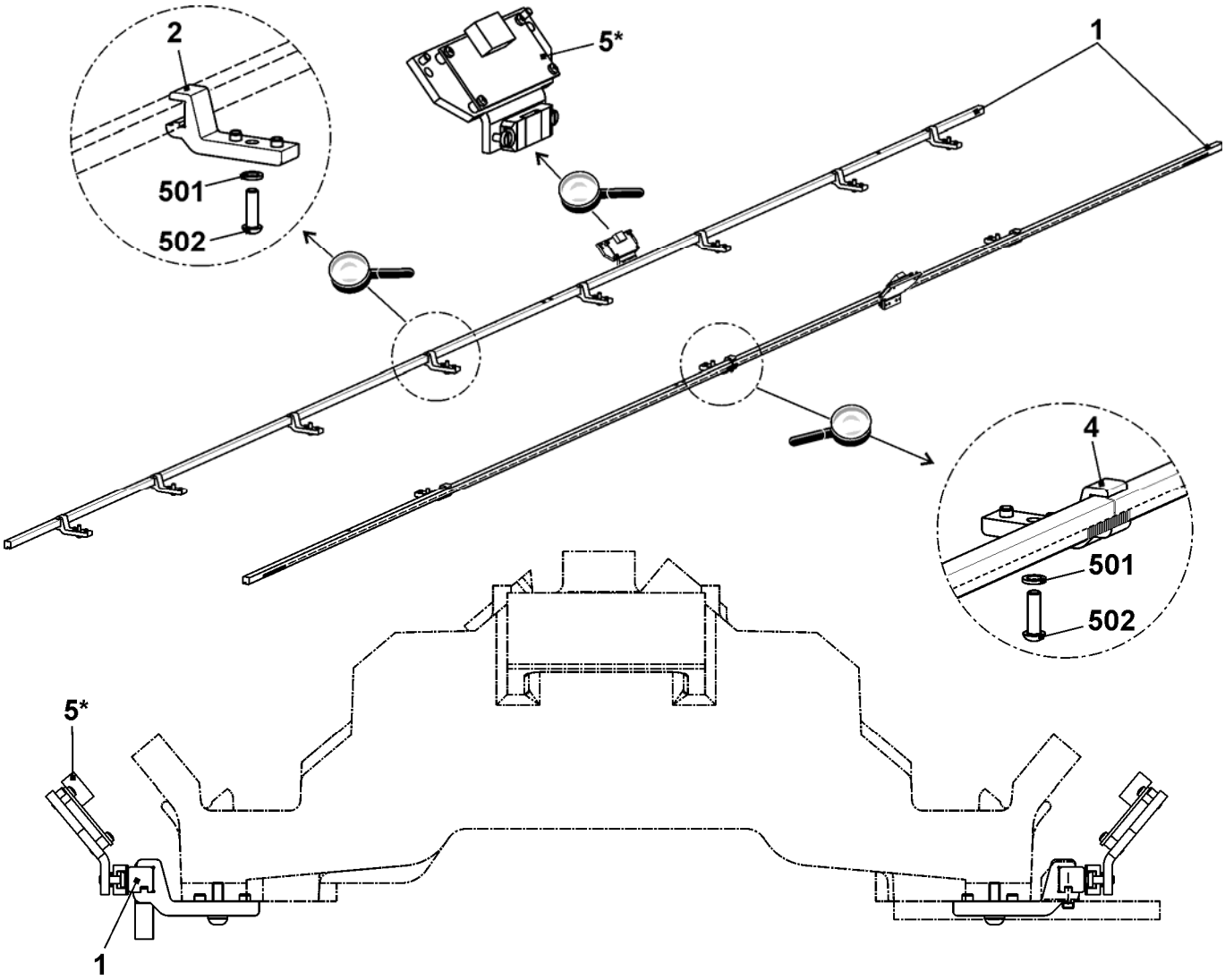

Protective units

Lateral safety covers

Pos	*Designation*	*Ident No*	*Pos*	*Designation*	*Ident No*
Σ	**Left safety cover**		**Σ**	**Right safety cover**	
	E3 - E5	**241 271**		**E3 - E5**	**241 274**
	E7 - E8	**241 272**		**E7 - E8**	**241 275**
	E10 - E18	**241 273**		**E10 - E18**	**241 276**
1	Safety cover on the left	250 562	1	Safety cover on the right	250 563
2	Hinge	241 994	505	Screw KB 60x30	237 683
3	Plate	224 717	510	Screw KB 60x20	237 682
4	Locking plate	219 748			

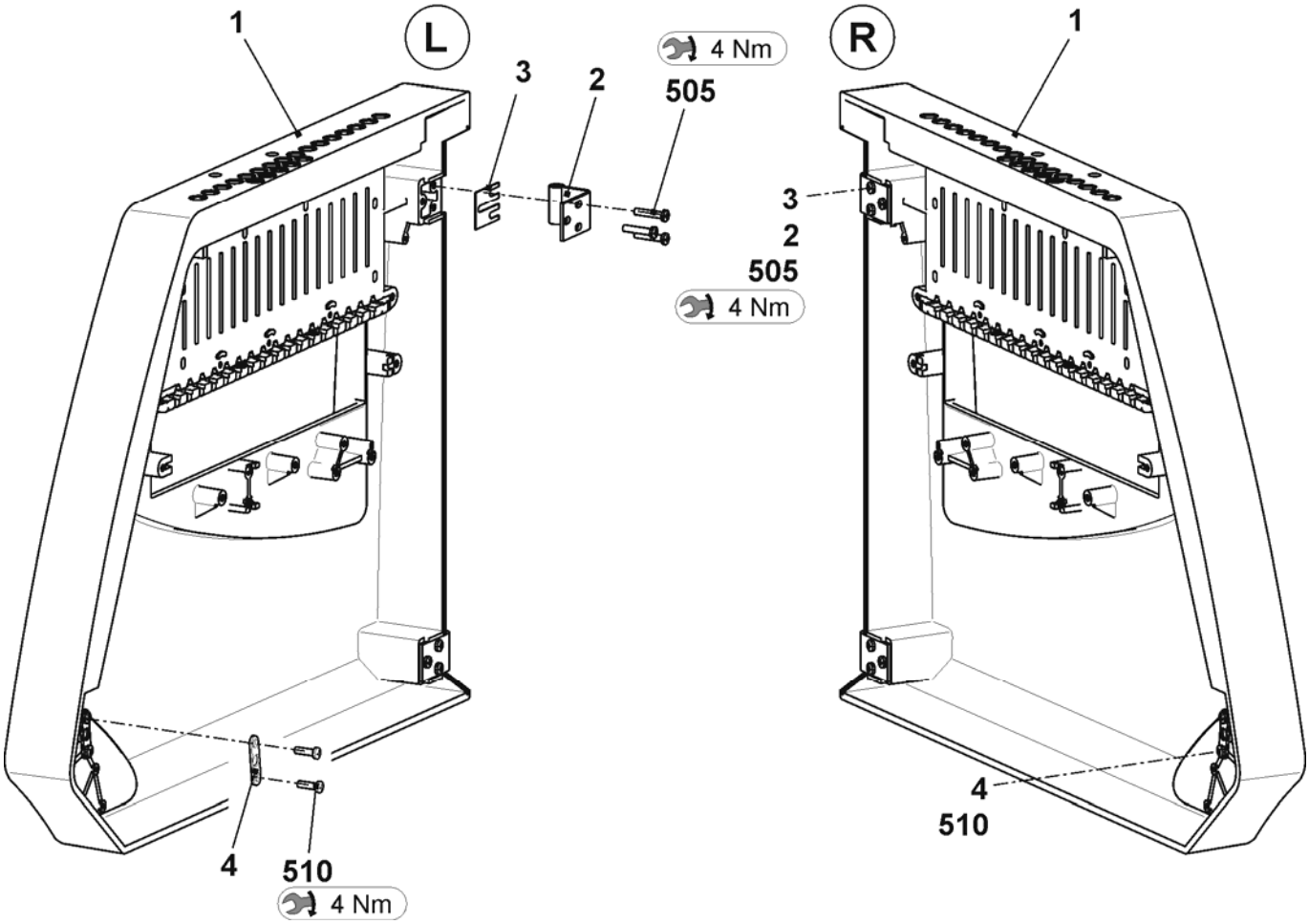

Panelling

Pos	Designation		Ident No	Pos	Designation		Ident No
1	Cover 1 (complete)		251 280	1-6	b	Inlet type handle	240 210
	1a	Cover 1	251 274		c	Stripper	219 393
2	Cover 2 (complete)		251 281		d	Magnet	204 666
	2a	Cover 2	251 275	7	Control unit panelling on the left complete		251 237
3	Cover 3 (complete)		251 282		7a	Control unit panelling on the left	251 190
	3a	Cover 3	251 276	8	Control unit panelling on the right complete		251 238
4	Cover 4 (complete)		251 283		8a	Control unit panelling on the right	251 191
	4a	Cover 4	251 277	7-8	x	Side part	244 989
5	Cover 5 (complete)		251 284		y	Hinge	250 273
	5a	Cover 5	251 278		z	Strap	240 412
6	Cover 6 (complete)		251 285		500	Screw KB 50x12	240 359
	6a	Cover 6	251 279		501	Cap screw M6x10	023 690

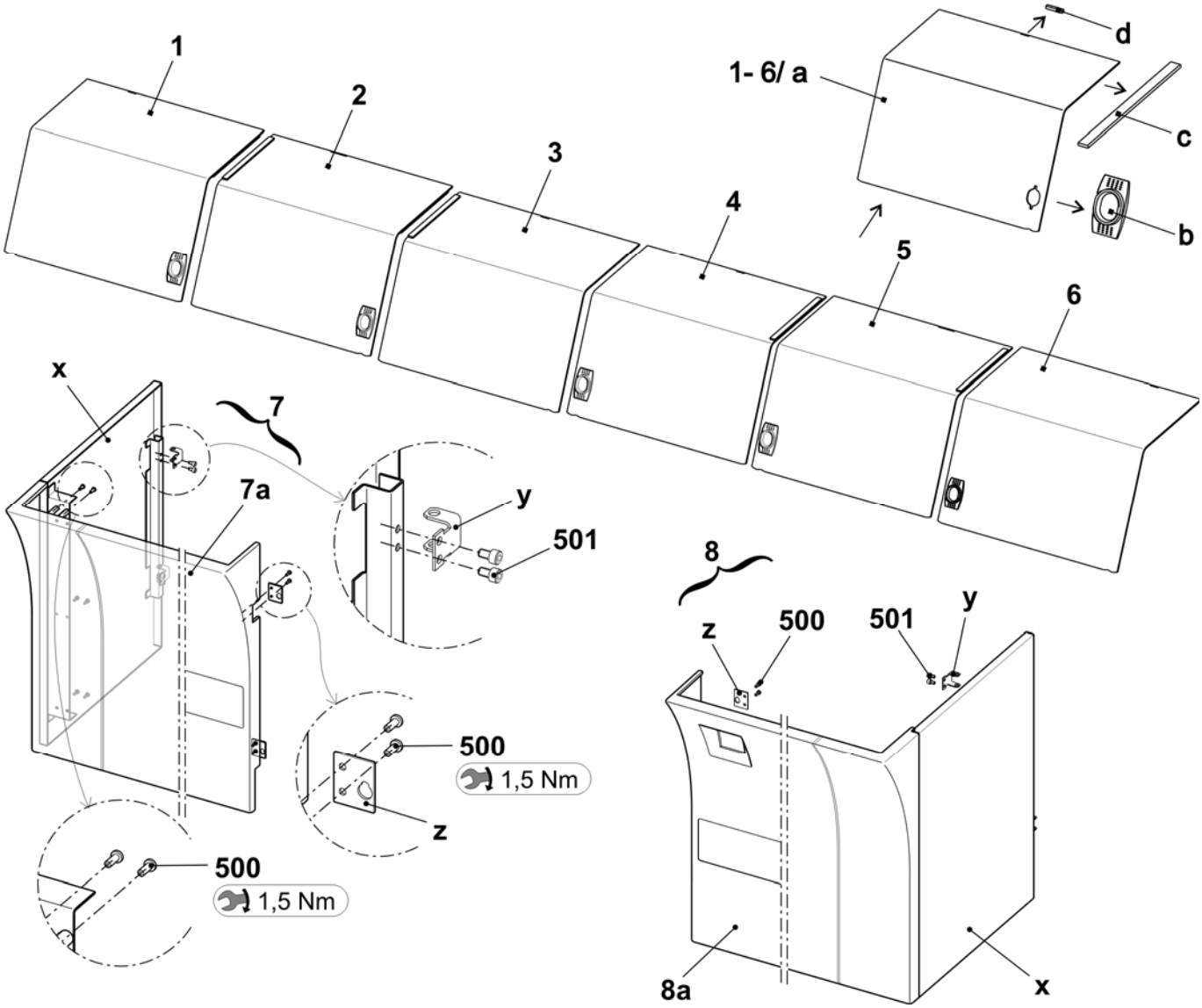

Rear panel

Pos	*Designation*	*Ident No*		*Pos*	*Designation*	*Ident No*
1	**Panelling at the rear with sash fastener**	**240 657**		11	Panelling	240 656
				12	Safety sash fastener	243 052

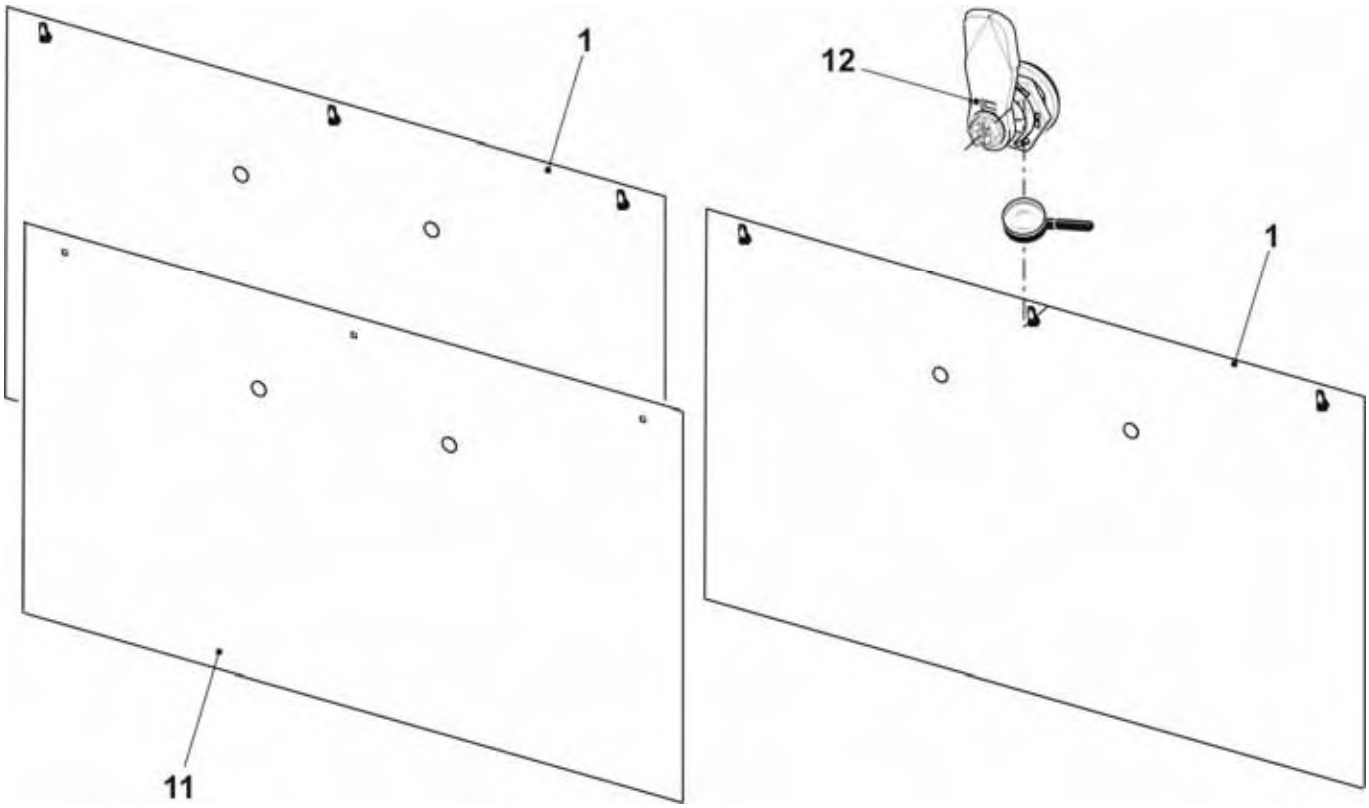

Electrical equipment

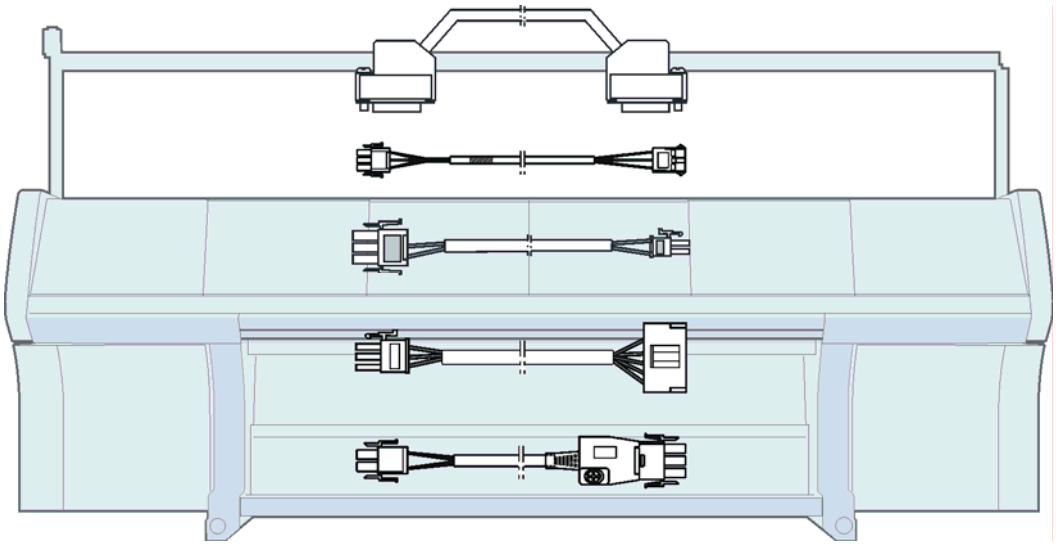

TS-Elektrik 84Z ()

Fuses

Designation		*Ident No*
	Fuse 1.0A F 5x20	008 748
	Fuse 3.15A T/440V 6.3x32	025 261
	Fuse 10A T/440V 6.3x32	025 258
	Fuse 2.5A T/440V 6.3x32	217 465
	Fuse 1.6A T/440V 6.3x32	236 229
	Fuse 6.3A T/440V 6.3x32	026 809
	Fuse 8A T/440V 6.3x32	241 866
	Fuse 12.5A T/440V 6.3x32	232 367

Circuit diagram as PDF

Designation	*Ident No*	*Identification*
Circuit diagram 219 German	243 991	_DE
Circuit diagram 219 English	243 991	_GB
Circuit diagram 219 Chinese	243 991	_CN

You will find the circuit diagram 219 on the CMS documentation DVD with the identification number 242283

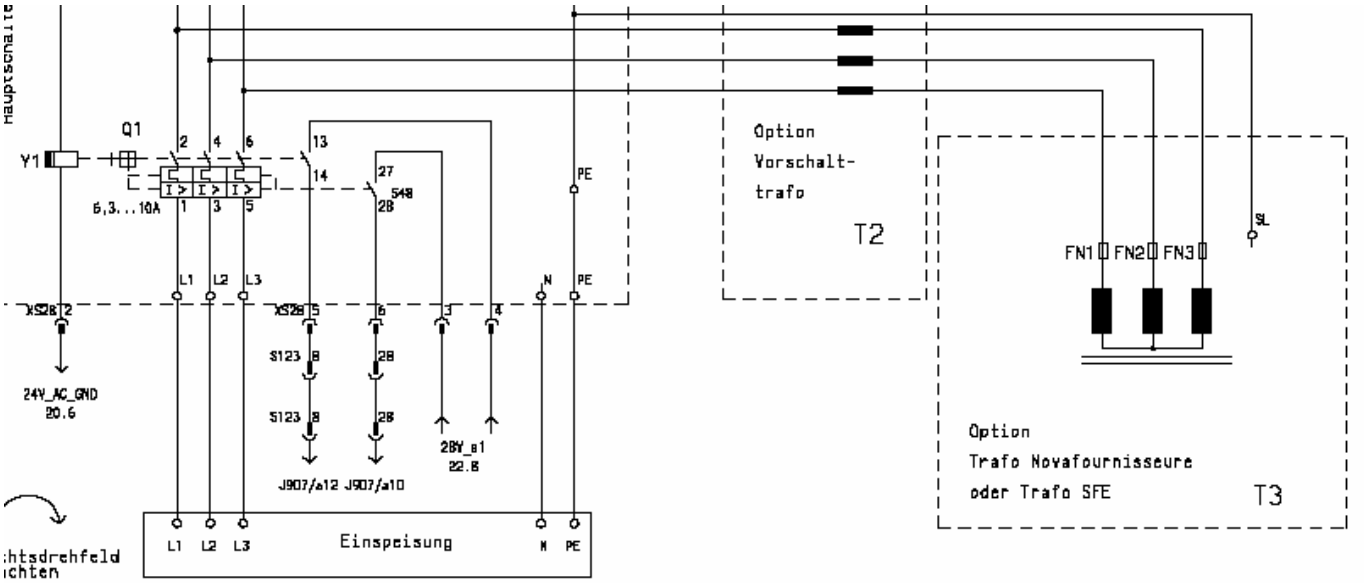

Trailing cable

Designation	*Ident No*
Cable impulse giver at the rear on the right XL136	242 285
Cable impulse giver at the front on the right XL137	242 286
Cable impulse giver at the rear o the left XL138	242 287
Cable impulse giver at the front on the left XL139	242 288

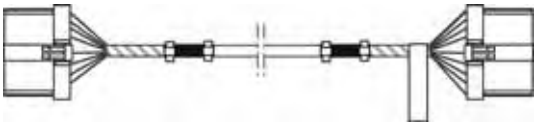

Cable yarn carrier on the left	242 289
Cable yarn carrier on the right	242 290

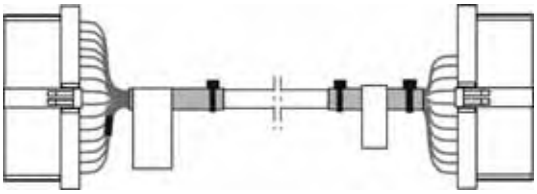

Designation	*Ident No*
Cable SM rear left XL321	242 291
Cable SM front left XL323	242 293
Cable SM rear right XL325	242 295
Cable SM front right XL327	242 297

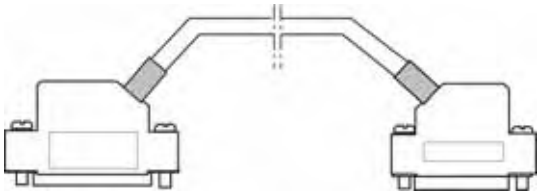

Cable signal at the rear on the left XL322	242 292
Cable signal front left XL324	242 294
Cable signal at the rear on the right XL326	242 296
Cable signal front right XL328	242 298

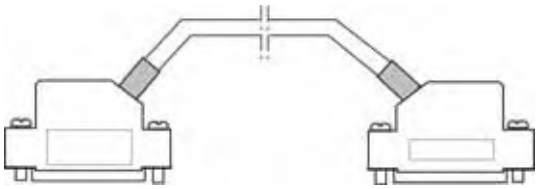

STOLL
THE RIGHT WAY TO KNIT

Cable

Designation	*Ident No*	*Designation*	*Ident No*
Cable engaging OKC	240 289	Cable mains supply FKE lamp OKC	240 290
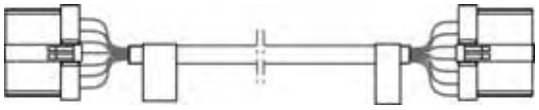			
Cable protective unit on the left OKC	238 705	Cable motor HIAB OKC	240 291
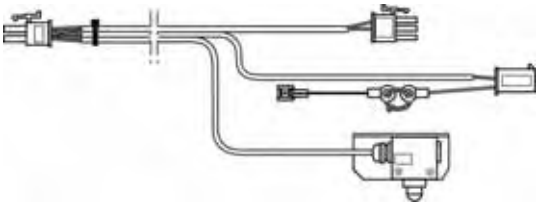			
Cable racking limit switch OKC	240 292	Cable ventilator drive OKC	240 293
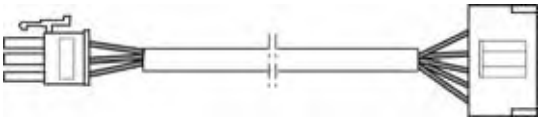			
Cable feed wheel on the right OKC	240 294	Cable drive motor OKC	240 295
Cable feed wheel on the left 84“ OKC	240 466	Cable racking motor OKC	240 297
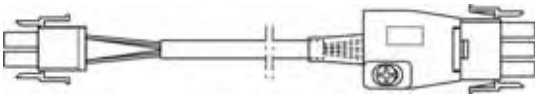			
Cable resolver drive OKC	240 296	Cable protective unit on the right OKC	238 706
Cable resolver racking OKC	240 298		
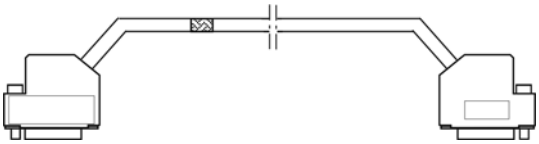		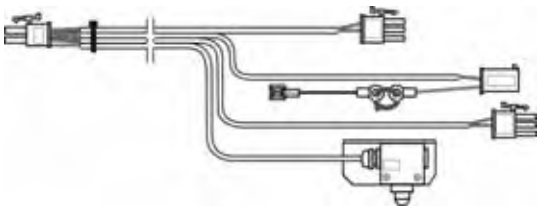	
Cable CAN 84“	240 416	Cable electro 84" OKC	240 463
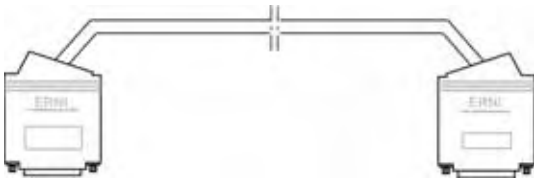			
Cable motor HIAB 84“ OKC	242 226	Cable switch HIAB 84“ OKC	242 227

Designation	*Ident No*	*Designation*	*Ident No*
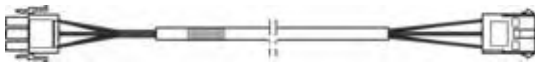			
Cable power supply WAZ/F 84“ OKC	240 471	Cable power supply Servo 84“	240 504
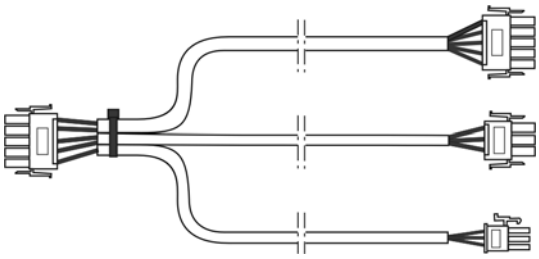		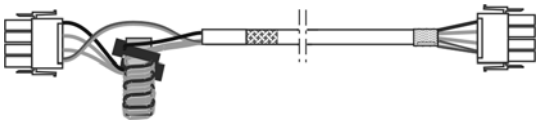	
Cable power supply of mains supply OKC	240 505	Cable power supply lighting 84“ OKC	240 507
		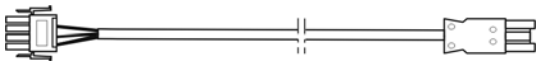	
Cable motor HAAB OEF/S 84“	242 228	Cable switch HAOS 84“ OKC	242 229
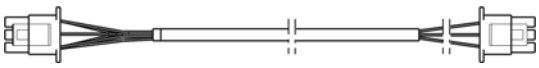			
Cable switch HIAB pressure motor OKC	240 593	Cable HIAB pressure motor OKC	240 592
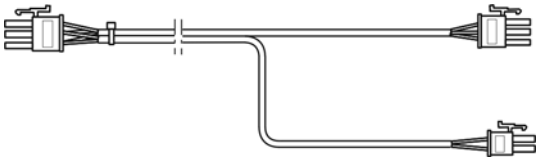		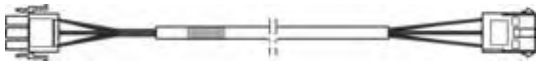	
Cable power supply FLENT OKC	243 141	Cable motor comb hook OKC	240 308
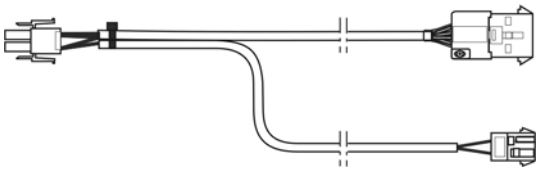			
Cable switch KAHA OKC	240 309	Cable motor comb OKC	240 310
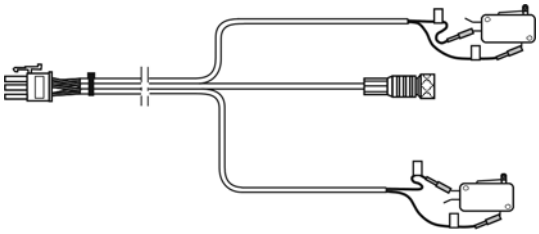		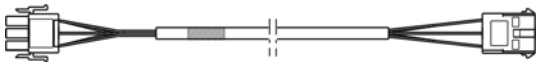	
Cable switch comb OKC	240 311	Cable switch HAAB OKC	240 312

Designation	Ident No		Designation	Ident No
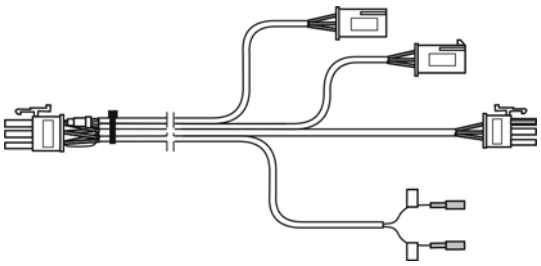			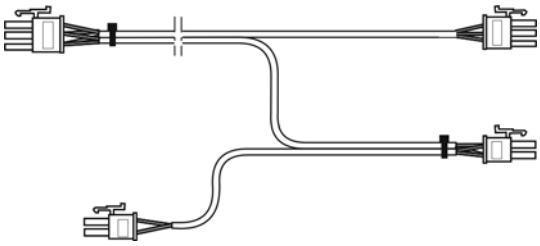	
Cable Piezo NB OKC	240 518			
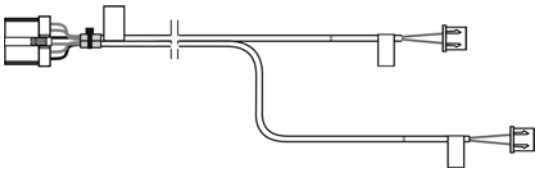				

Control electronics

TS-Steuerungselektronik 84Z ()

Left control cabinet

Pos	Designation	Ident No		Pos	Designation	Ident No
Σ	**Control unit on the left complete**	**250 435**				
1	Control unit on the left without equipment	250 434		5	Card SM-CPU 2	300 946
2	Battery plug-in unit	300 924		6	Card amplifier 4SM 7TE	300 943
3	Power supply CG54	300 923		7	Card N-CPU 432	300 965
	31 Ventilator power supply	239 305		8	Card power CPU1	300 966
	32 Filter mat CG54	239 350		9	Card IPC P8C OKC	300 976
4	Card battery OKC	300 951		10	Adhesive label of card equipment	242 310

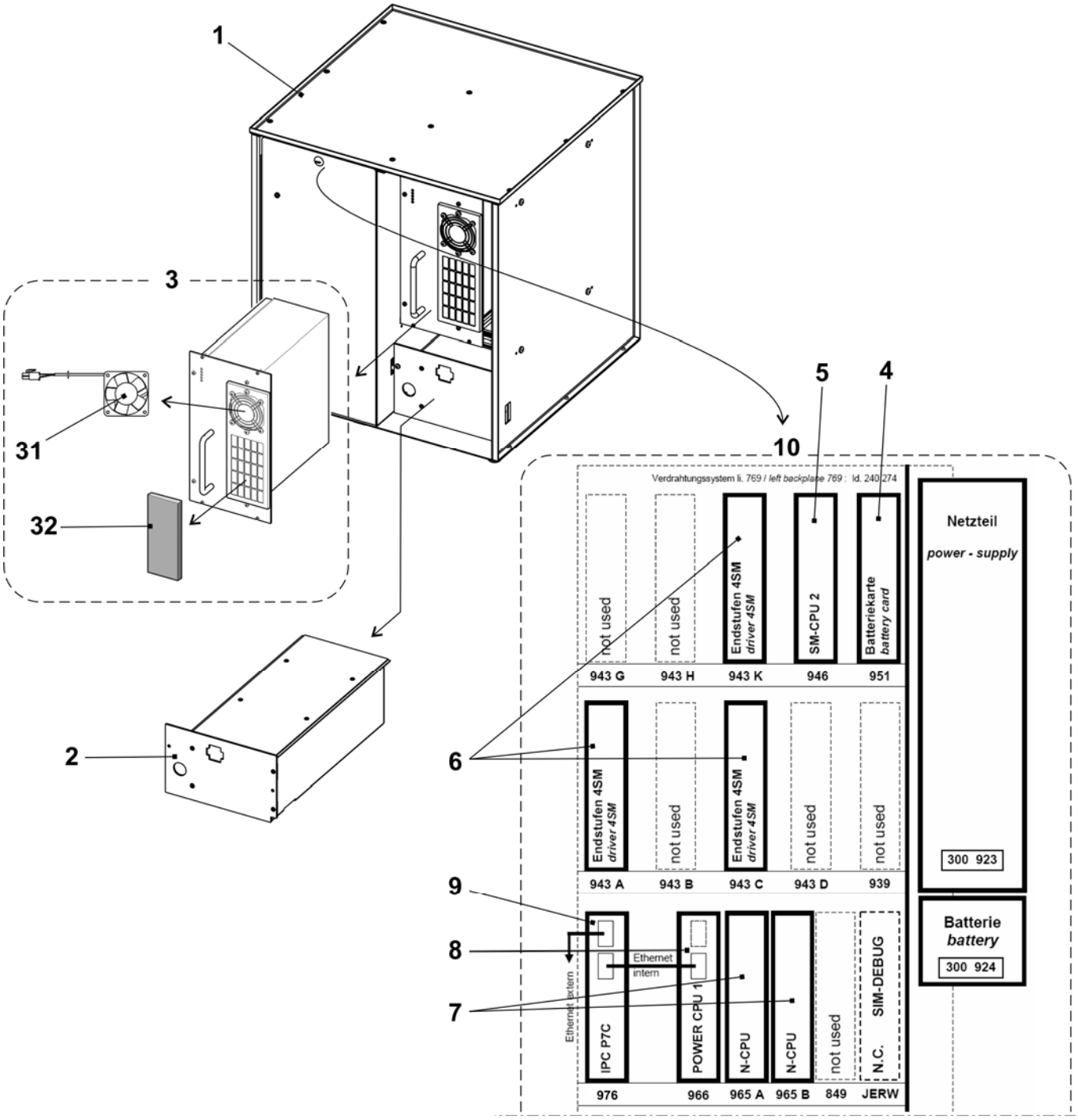

Right control cabinet

Pos	*Designation*	*Ident No*		*Pos*	*Designation*	*Ident No*
Σ	**Control unit on the right complete OKC**	**238 738**				
1	Control unit on the right without equipment	238 737		3	Card relay OKC	300 953
1a	Axial fan Servo 5	229 059		4	Card CWAZ	300 929
2	Card servo 6	301 000		5	Card CWAZ capacitor	300 936

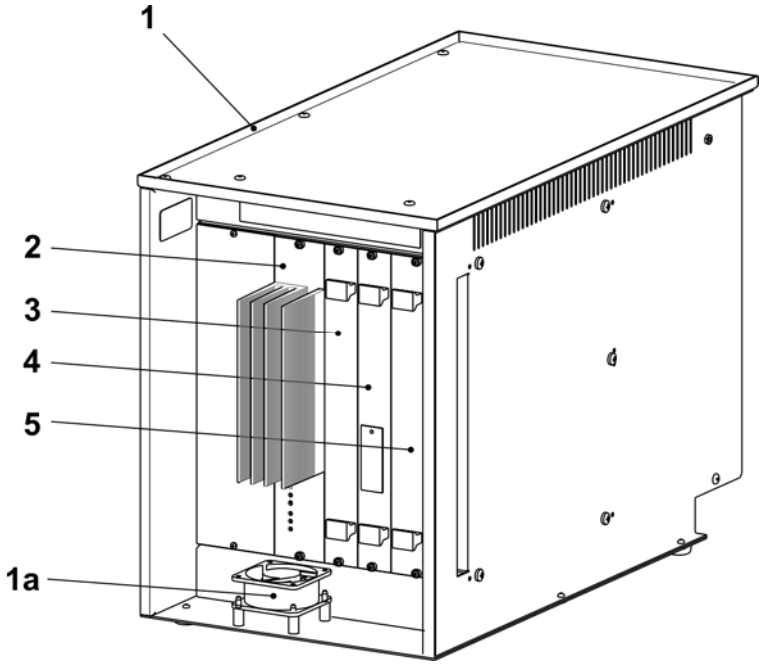

Deliverable accessories

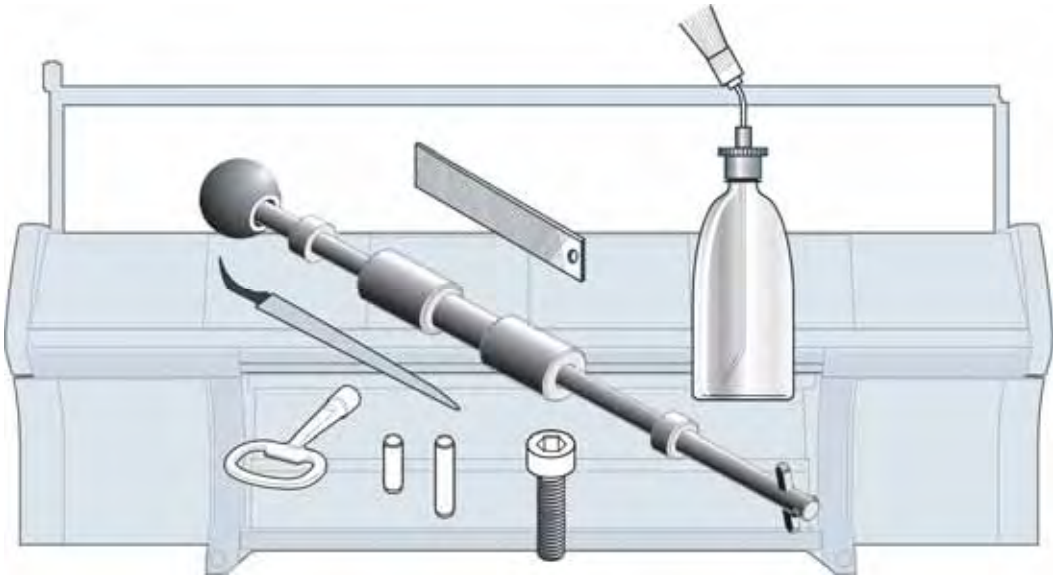

You can order the following tools, lubricants and expendables.

The following list is not conformed with the scope of supply of the knitting machine.

Tool

Pos	Designation		Ident No	Pos	Designation	Ident No
1	Channel support E4		062 309	6	Groove file 1.33 mm E3-4	006 169
	Channel support E5, E2,5.2		062 310		Groove file 1.25 mm E5-8, E3,5.2	006 170
	Channel support E7, E3,5.2		062 312		Groove file 0.90 mm E10-12, E5.2 + 6.2	006 175
	Channel support E8		062 313		Groove file 0.73 mm E14, E7.2	006 173
	Channel support E10, E5.2		062 314		Groove file 0.45 mm E16-18, E9.2	006 179
	Channel support E12, E6.2		062 315	7	Key of switch cabinet	009 346
	Channel support E14, E7.2		218 069	8	Groove cleaner E4	031 232
	Channel support E16, E8.2		230 188		Groove cleaner E5	031 233
	Channel support E18, E9.2		230 189		Groove cleaner E6	031 234
	Channel support E20		230 190		Groove cleaner E7, E3,5.2	031 235
2	Channel chisel E14-20 (E5-14)		062 316		Groove cleaner E8	031 236
	Channel chisel E4-8 (E3,5.2)		062 317		Groove cleaner E10 (E5.2)	031 238
	Channel chisel E10-14		062 318		Groove cleaner E12 (E6.2)	031 240
3	Yarn guide on the left		227 071		Groove cleaner E14 (E7.2)	031 242
	Yarn guide on the right		227 070		Groove cleaner E16	225 111
4	Working hook		227 249		Groove cleaner E18 (E9.2)	225 112
5	Extraction hook		232 027		Groove cleaner E20	225 113
	5a	Small pin	202 843	9	Measuring tape L=150 cm	228 180
	5b	Pin	232 022	10	Tool kit	209 527

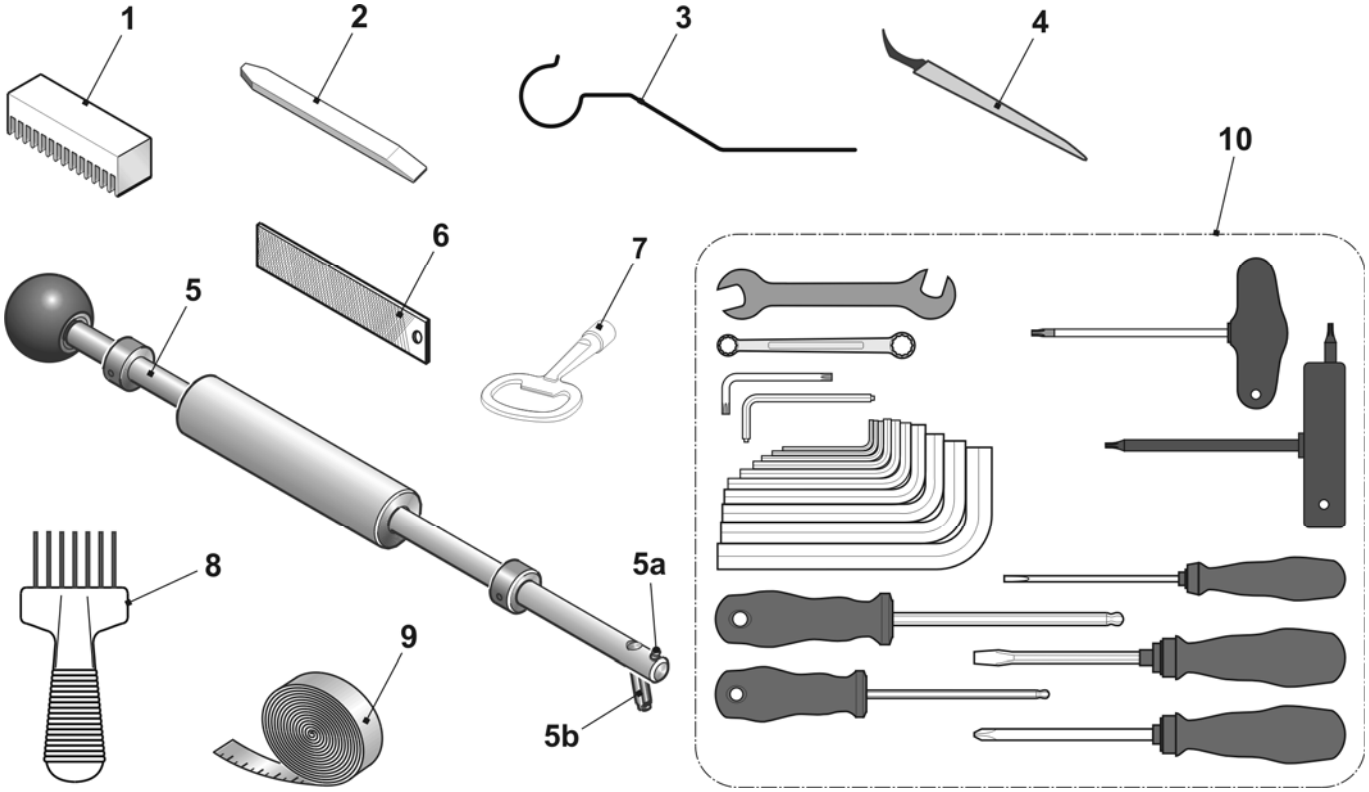

Lubricating stuff

Pos	Designation	Ident No	Pos	Designation	Ident No
1	Textile machines oil T46, 1l	230 614	4	Oil combifix no. 8/10 group 10	216 732
2	Grease OKS 475, 1kg	009 200	5	White grease paste OKS270	229 372
3	Grease OKS 475, 150g	005 351	6	Grease Staburags NBU 12/300KP	231 191

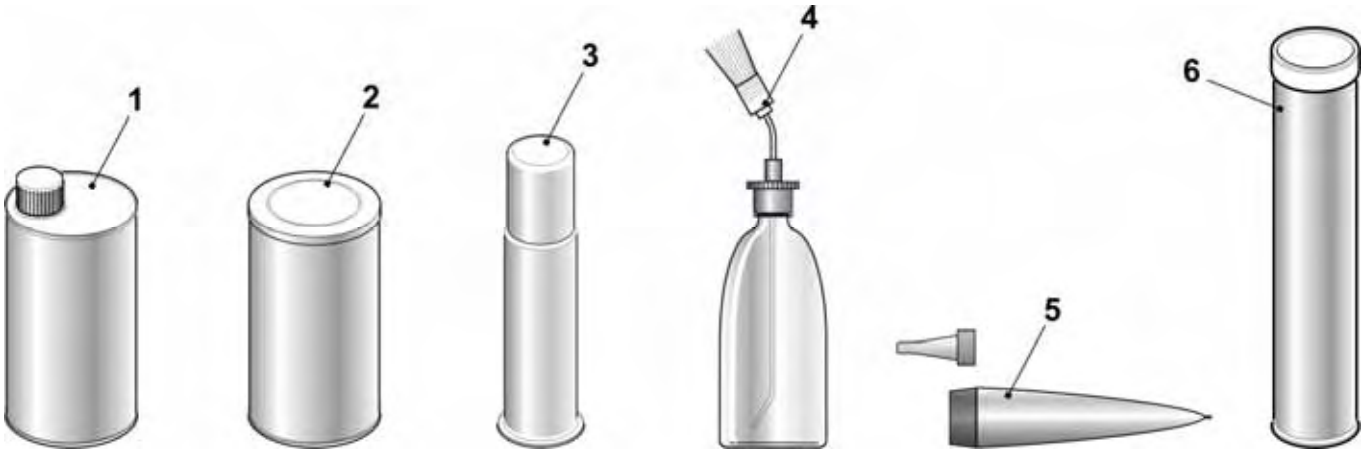

Mechanical parts

Pos	*Designation*	*Ident No*	*Pos*	*Designation*	*Ident No*
1	Cap screw M4x8	020 091	11	Cable binder 203x3.6 mm	025 815
2	Countersunk screw ISO 2009 - M3x6	020 286		Cable binder T50L	026 294
3	Cap screw DIN 912 - M5x16	022 726		Cable binder	008 379
4	Cap screw DIN 912 - M6x14	022 658		Cable binder 302x4.8 mm	008 642
5	Set screw DIN 914 - M16x50-45H	023 235		Cable binder 92x2.4mm	008 378
6	Setting pin 3x7	020 643	12	Reusable tie ABV 232 320 mm	026 557
7	Setting pin 3x10	020 645			
8	Setting pin 3x12	020 647			
9	Setting pin 5x12	021 988			
10	Setting pin 5x18	022 622			

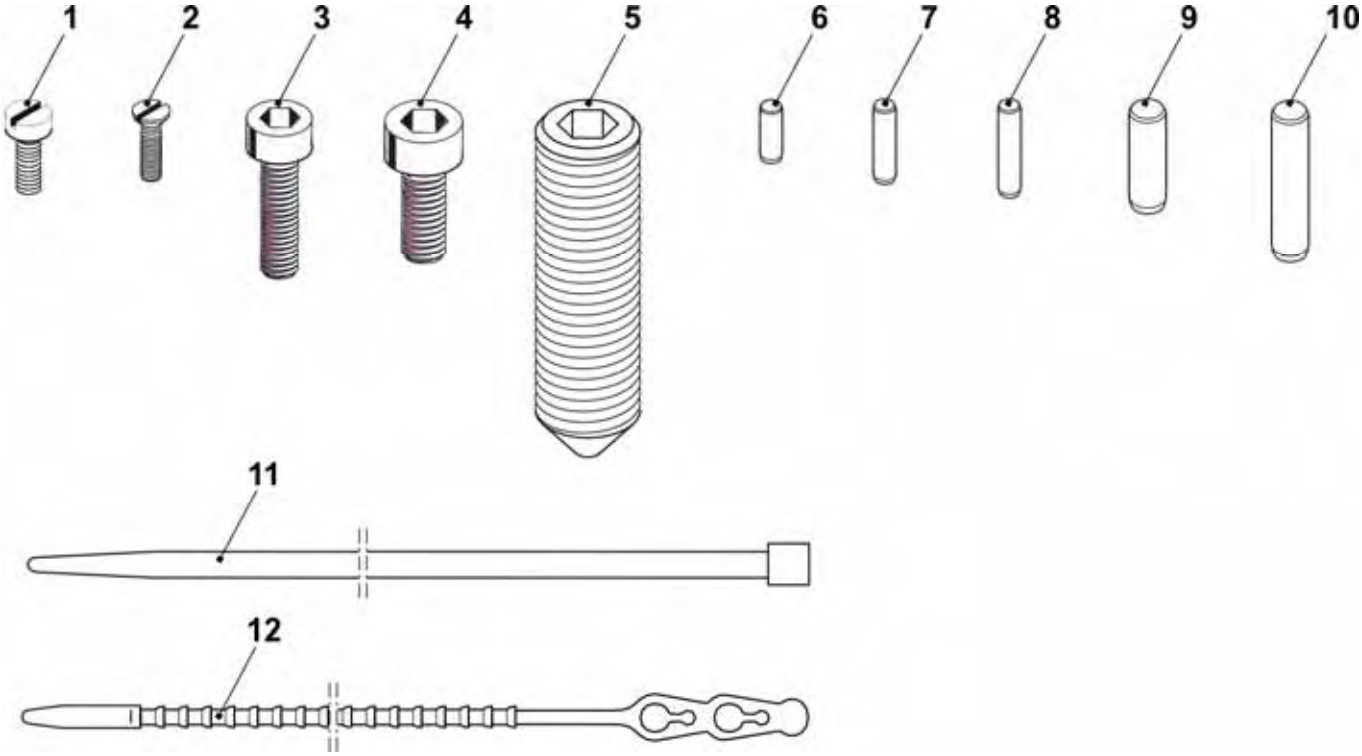

Special equipment

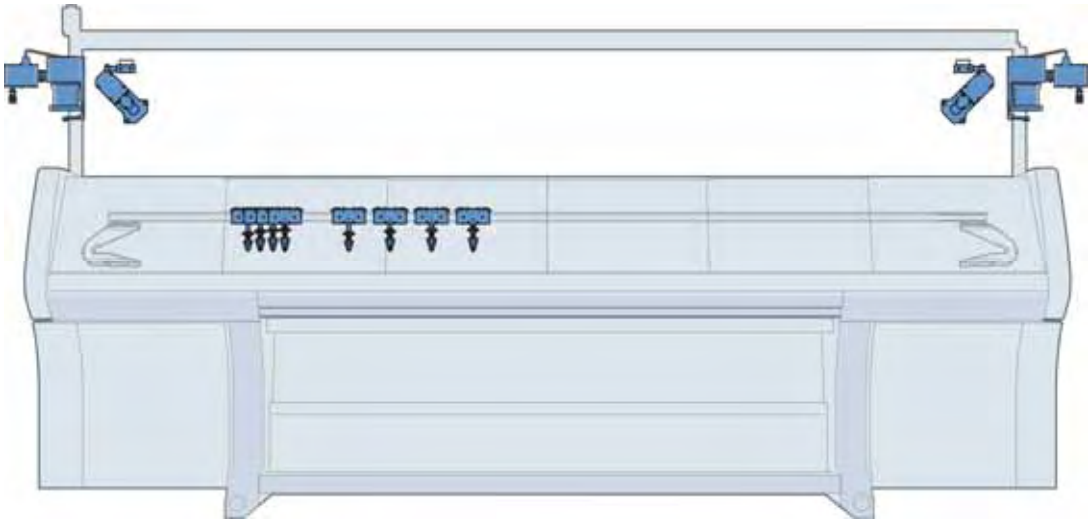

Complete intarsia yarn carriers

Designation	*Gauge*	*Track*	*Pos*	*Ident No*		*Designation*	*Gauge*	*Track*	*Pos*	*Ident No*
Intarsia yc carriage complete	E5 E2,5.2 E3,5.2 E5.2	1 + 8	1	212 974		Intarsia yc carriage complete	E14 E8.2	1 + 8	1	214 146
		2 + 7	2	212 977				2 + 7	2	214 147
		3 + 6	3	212 980				3 + 6	3	214 148
		4 + 5	4	212 983				4 + 5	4	214 149
	E7 - E8 E6.2	1 + 8	1	212 975			E16 - E18	1 + 8	1	227 126
		2 + 7	2	212 978				2 + 7	2	227 127
		3 + 6	3	212 981				3 + 6	3	227 128
		4 + 5	4	212 984				4 + 5	4	227 129
	E10 - E12 E6.2(12) E7.2 E9.2	1 + 8	1	212 976						
		2 + 7	2	212 979						
		3 + 6	3	212 982						
		4 + 5	4	212 985						

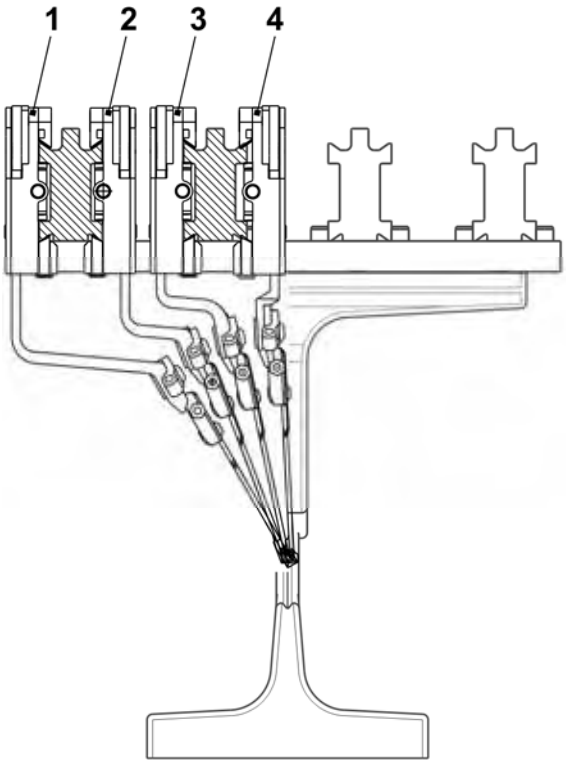

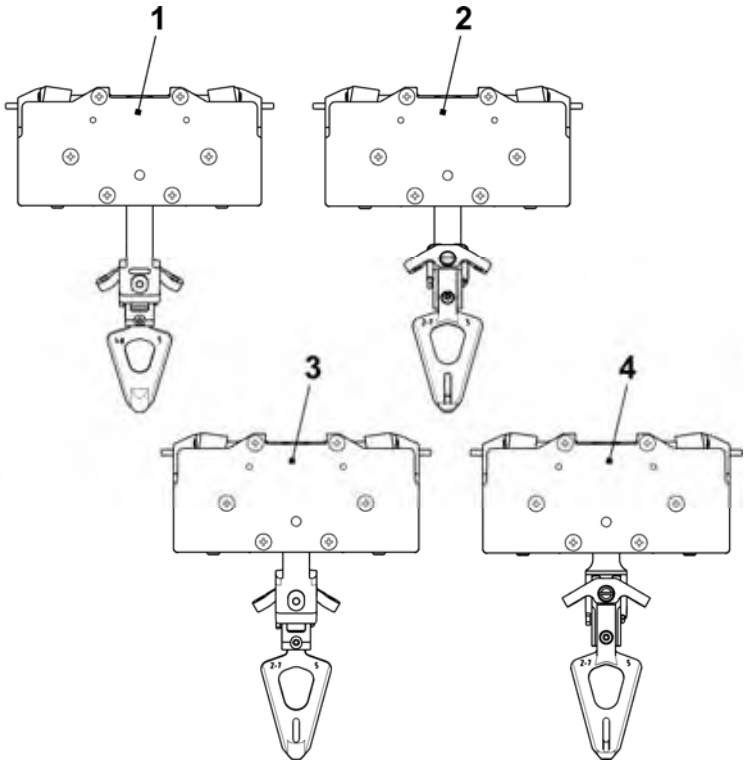

Carriage IYC

Pos	Designation	Ident No	Pos	Designation	Ident No
1	Basic plate complete	216 031	13	Clamping lever on the left	216 101
	20 Threaded bolt	213 399	14	Pressure plate 2.04	201 654
2	Slider	217 170		Pressure plate 2.06	208 924
3	Locking plunger	212 508		Pressure plate 2.02	235 740
4	Sliding block	213 807	16	Spring pin	201 677
7	Locating pin 3.3	212 504	17	Lifter	212 547
	Locating pin 3.4	212 505	18	Sliding part	212 543
	Locating pin 3.5	212 506	500	Countersunk head screw M4x6	022 994
9	Thrust piece	212 773	502	Countersunk head screw M4x12.5	022 979
10	Pressure roller	212 774	506	Compression spring 4.0x0.7x25	022 969
11	Cover	212 507	508	Compression spring 2.8x0.35x19	023 394
12	Clamping lever on the right	216 087			

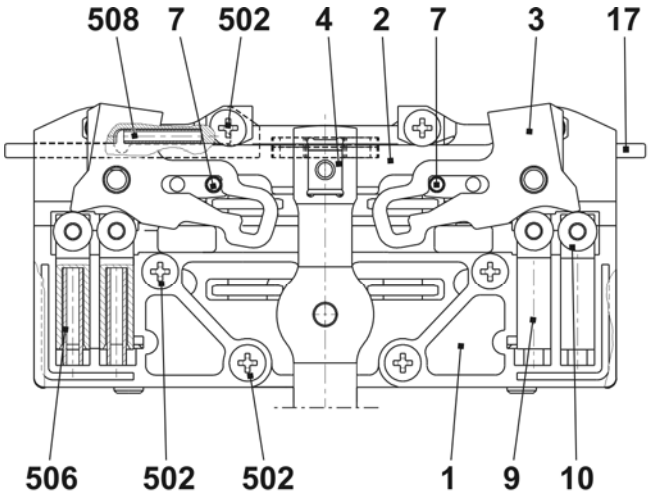

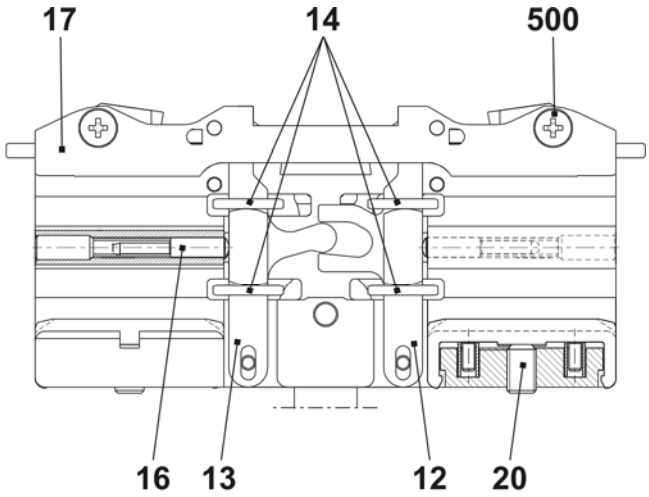

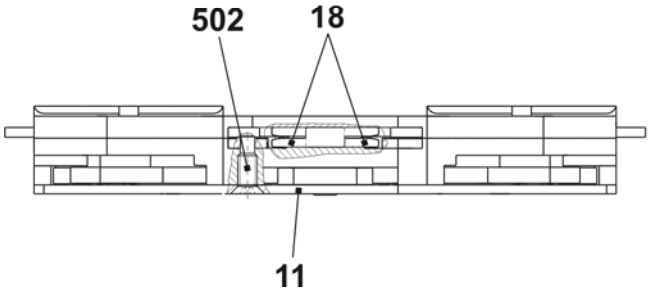

Bow and head IYC

Pos	*Designation*	*Ident No*	*Pos*	*Designation*	*Ident No*
1	YC bow 1+8	212 986	7	Yarn guide angle	201 672
2	YC bow 2+7	212 987	500	Countersunk screw M4x8	023 579
3	YC bow 3+6	212 988	501	Circlip S4-FST	022 774
4	YC bow 4+5	212 989			

Pos	*Designation*	*Gauge*	*Track*	*Ident No*	*Pos*	*Designation*	*Gauge*	*Track*	*Ident No*
5	YC head	E5, E5.2 E2,5.2 E3,5.2	1 + 8	208 579	6	YC head	E5, E5.2 E2,5.2 E3,5.2	2 + 7 3 + 6 4 + 5	208 581
		E7 - E8 E6.2		208 580			E7 - E8 E6.2		208 582
		E10 - E12 E6.2(12) E7.2 E9.2		209 700			E10 - E12 E6.2(12) E7.2 E9.2		209 701
		E14 E8.2		213 864			E14 E8.2		213 865
		E16 - E18		227 109			E16 - E18		227 113

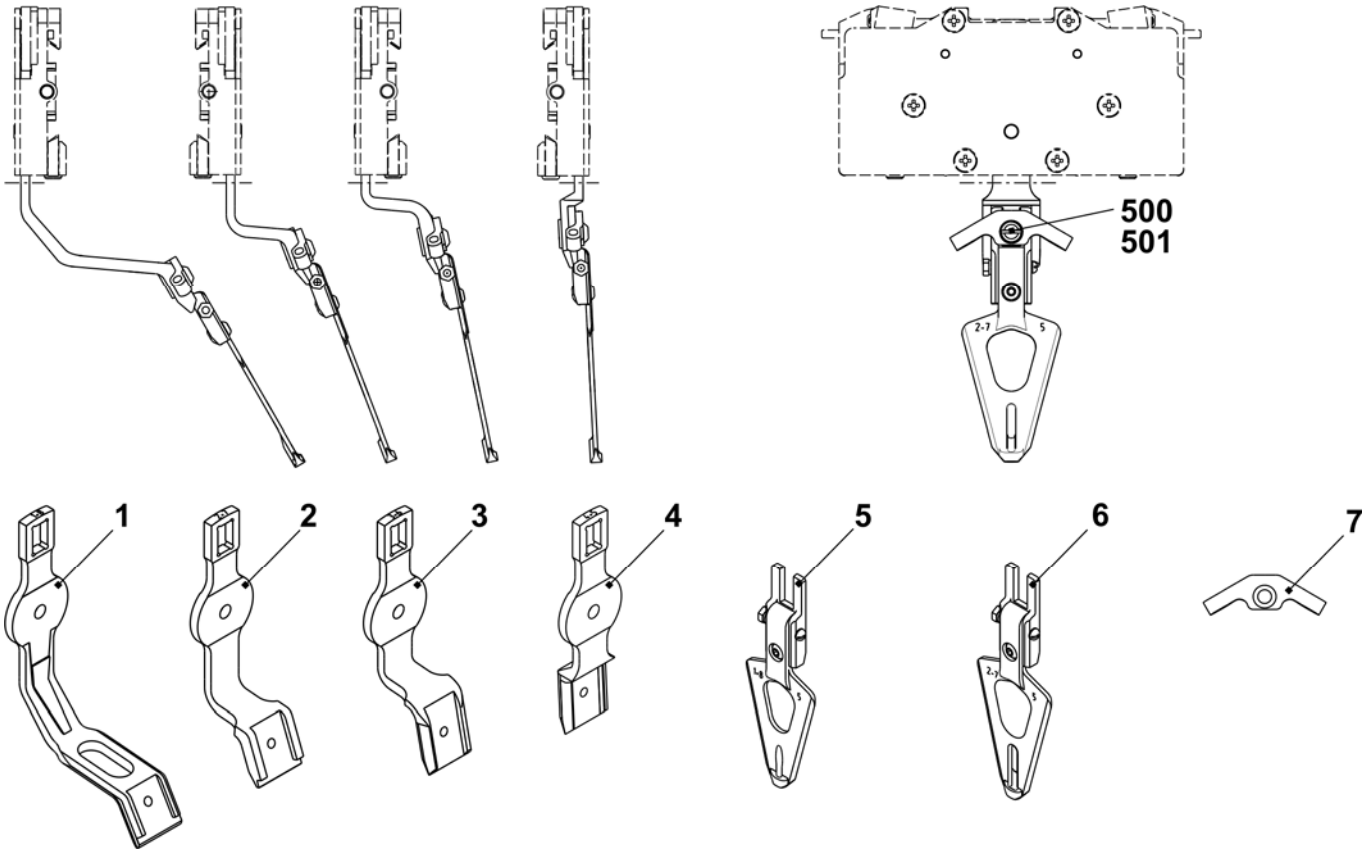

Bow of plating yarn carrier

Pos	Designation	Ident No	Pos	Designation	Ident No
1	Plating YC bow 4+5	214 591	**2**	Plating YC bow 3+6 E3 - E4	214 590
	Plating YC bow 4+5 E5; E2,5.2 + E3,5.2 + E5.2	213 326		Plating YC bow 3+6 E5; E2,5.2 + E3,5.2 + E5.2	213 328
	Plating YC bow 4+5 E7 - E8 + E6.2	213 327		Plating YC bow 3+6 E7 - E8 + E6.2	213 329
	Plating YC bow 4+5 E10 - E14 + E7.2 + E9.2	213 330		Plating YC bow 3+6 E10 - E14 + E7.2 + E9.2	213 331
11	YC carriage complete	243 062	500	Hexagon screw M5x10	020 351
12	Shim	213 035			

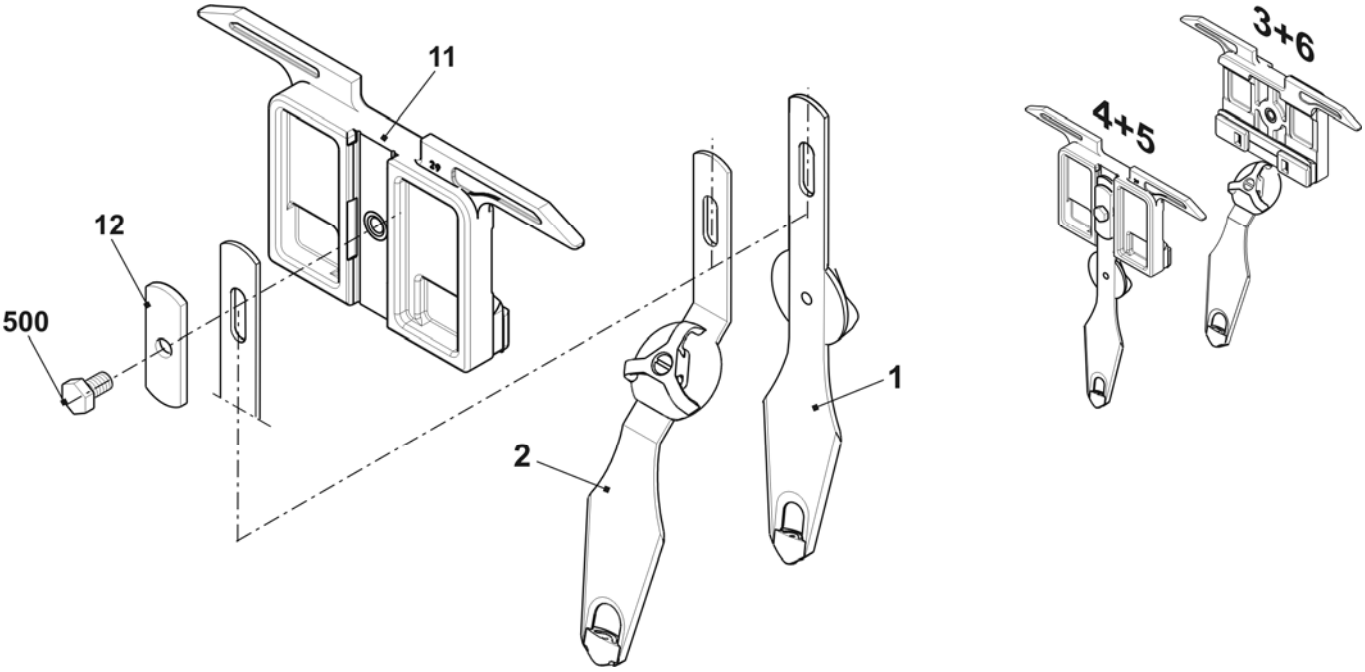

STIXX device

Pos	Designation	Ident No	Pos	Designation	Ident No
Σ	**STIXX 3 device**	**236 275**	22*	Setting weight	212 241
2	Sensor	211 354	23*	Threaded bar	200 223
3	Sensor complete	212 406	500	Countersunk screw M5x10	023 247
3a	Rubber running ring	212 390	501	Spring nut M5	022 873
6	Support	236 278	502	Countersunk screw M5x6	023 246
7	Threaded bar	211 801	503	Sheet metal screw ST3.5x13	022 940
9	Yarn guide rod	211 352	504	Spring washer A5	022 454
11	Card STIXX-CPU	300 934	505	Oval head screw with washer M3x10	023 380
12	Ventilator complete	212 255	506	Cap screw M5x22	023 193
20*	Support	223 029	510*	Countersunk screw M8x16	023 113
21*	Clamp	228 583			

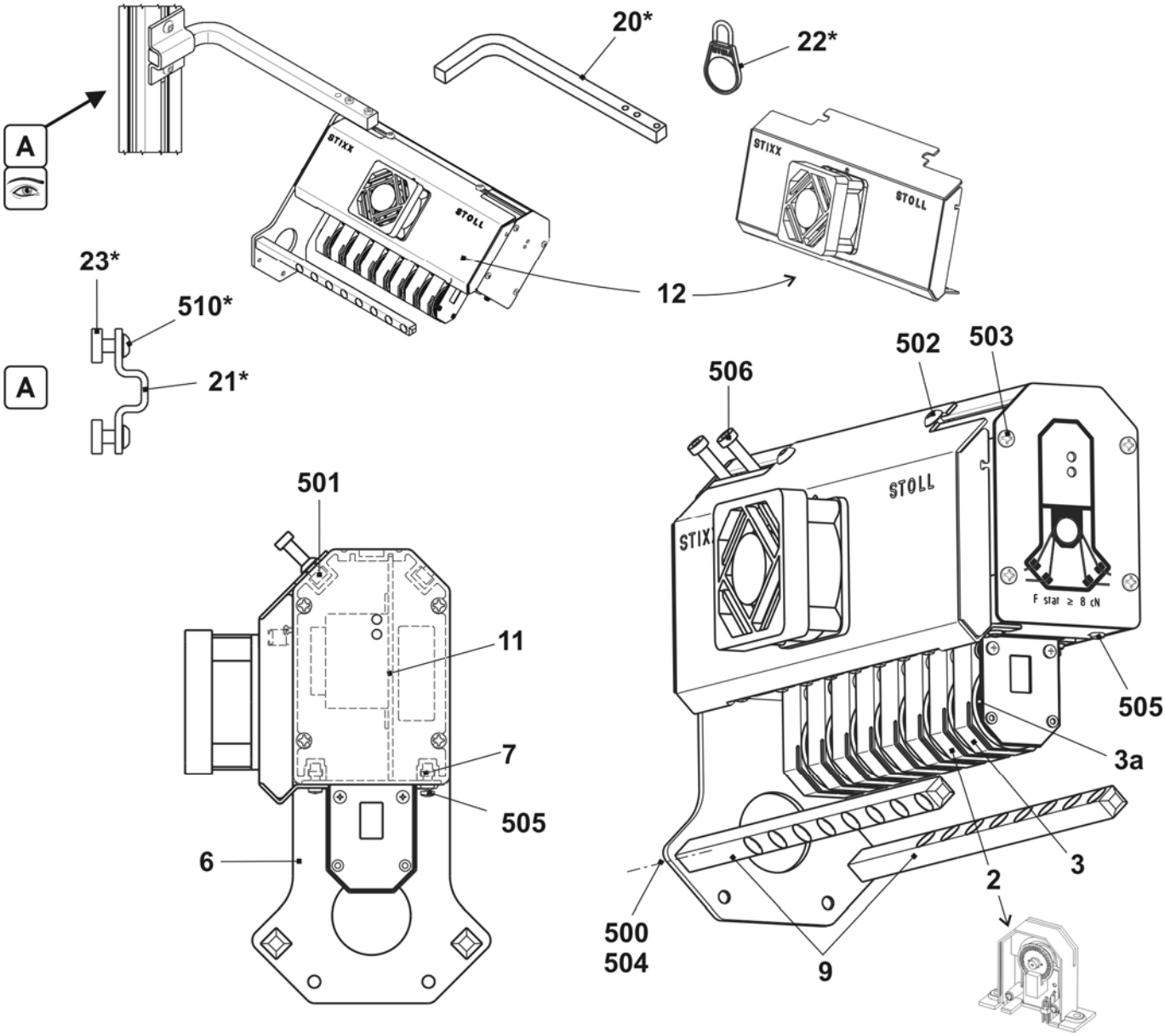

IRO NOVA storage feed wheel

Pos	Designation	Ident No	Pos	Designation	Ident No
Σ L	**Nova support on the left complete**	**238 945**	13*	Storage feed wheel Nova	212 824
Σ R	**Nova support on the right complete**	**238 944**	14*	Connecting cable 970	202 956
1	Feed wheel support	202 803	15*	Feed wheel brake	208 901
2	Cover plate	202 806	16*	Support	224 192
3	Square plug	202 860	20*	Cable mains supply transformer Nova	224 641
4	Cable feed wheel Nova	203 470	501	Countersunk screw ISO 7045 - M3x5	023 030
5	Cable screwing	008 351	502	Washer DIN 125 - A3.2-140HV	022 806
7	Cover	201 975	504	Countersunk screw ISO 7045 - M4x6	022 946
9	Electronic jack feed wheel	300 176	505	Disc DIN 433 - 4.3 - 140HV	020 879
11	Threaded bar	200 223	506	Cap screw DIN 912 - M8x45	020 146
12	Clamp	228 583	507	Oval head screw M8x16 galv.	023 113

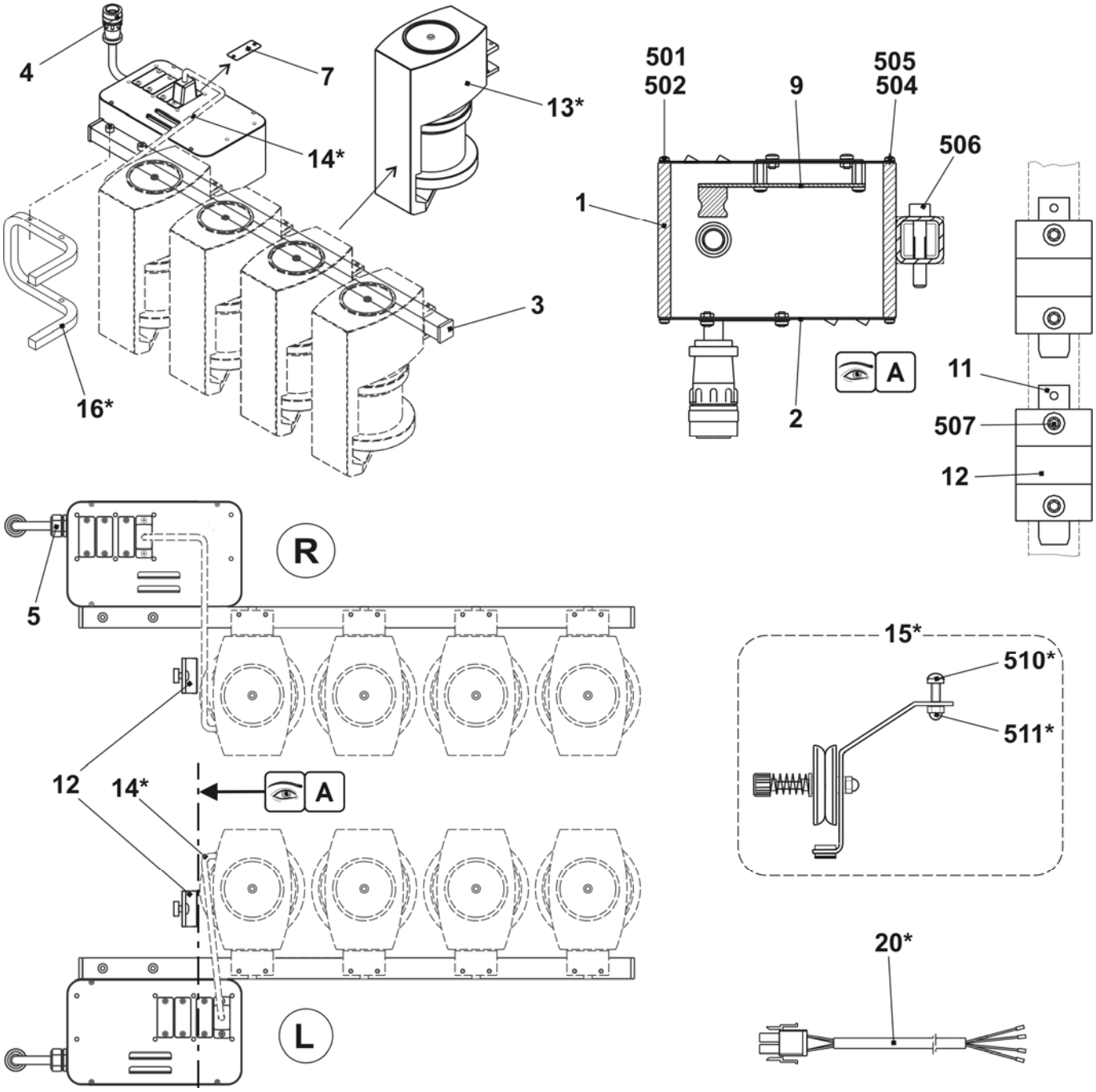

Additional board

Pos	*Designation*	*Ident No*	*Pos*	*Designation*	*Ident No*
Σ	**Additional board 7XX/8XX**	**241 928**			
1	Additional board welded	241 927	4	Disc D=130	062 385
2	Positioning pin	202 777	500	Countersunk screw M4x30	023 681
3	Bobbin support	200 363	501	Washer 5.3x30x1.25	023 556

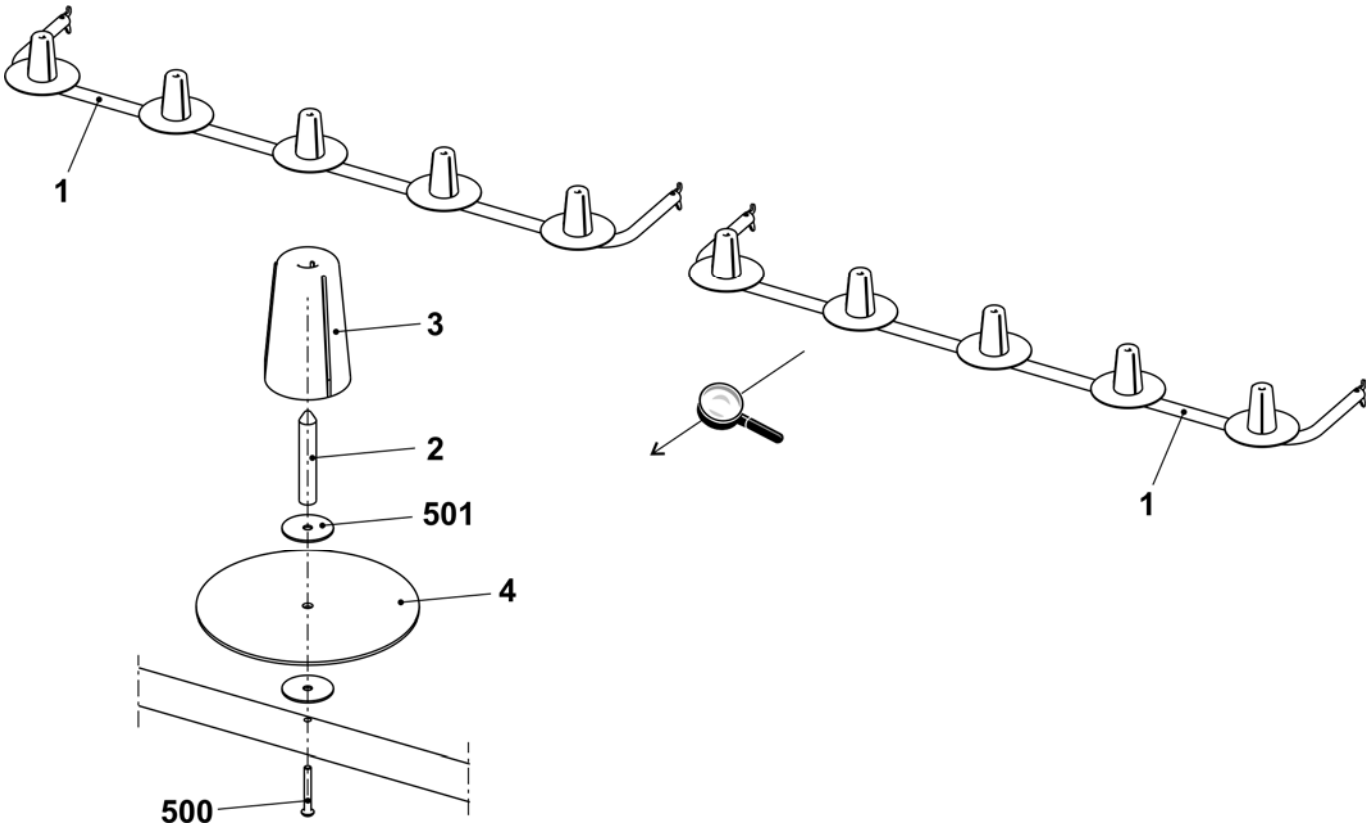

Conversion kit 32 IYC type 2

Pos.	Designation	Ident No
	CMS 822 conversion kit 32 IYC type 2 E5	**250 302**
	CMS 822 conversion kit 32 IYC type 2 E7-8	**250 303**
	CMS 822 conversion kit 32 IYC type 2 E10-14	**250 304**
	CMS 822 conversion kit 32 IYC type 2 E16-18	**250 305**

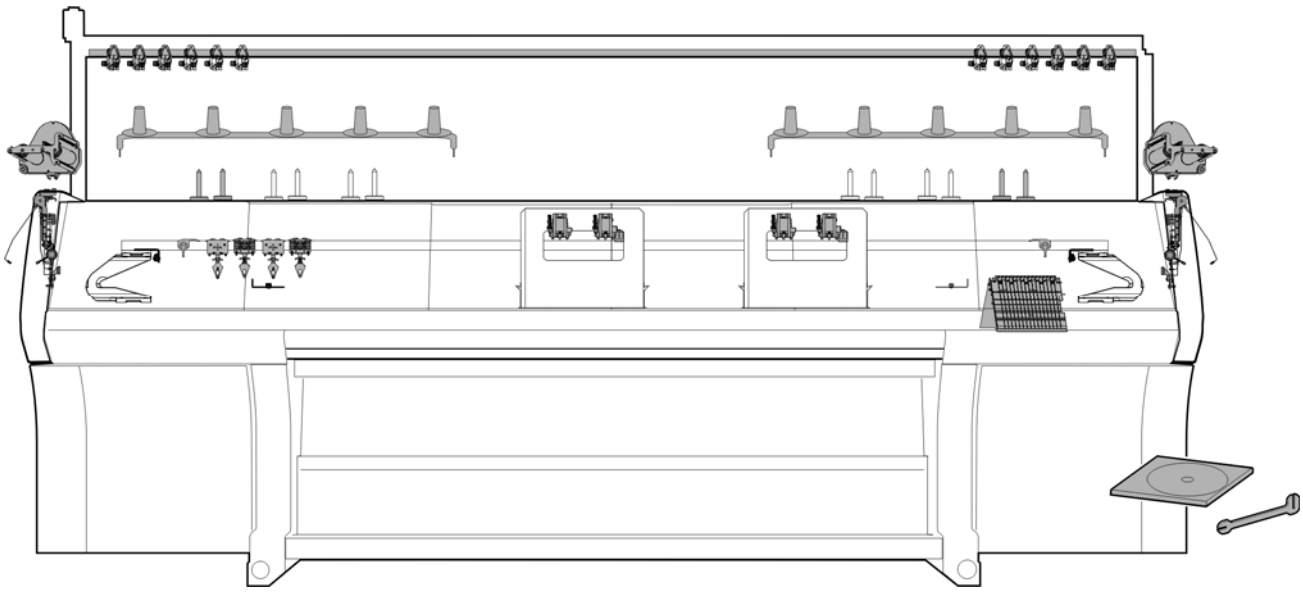

Overview of conversion kit E5

Pos	Designation	Ident No	Pos	Designation	Ident No
Σ	**CMS 822 conversion kit 32 IYC E5**	**250 302**			
1	Magnetic support complete	229 373	14	Yarn brake on the left	245 031
2	Yarn tensioner on the left complete E5	244 498	15	Yarn brake on the right	245 032
3	Yarn tensioner on the right complete E5	244 501	16	DVD instructions conversion kit IYC	245 169
4	Deflector on the left complete	223 316	17	Adjusting part for yarn carrier bow	250 119
5	Deflector on the right complete	223 049	18	Yarn guide complete E5 IYC	245 161
6	YC driving in the middle complete	245 298	19	Yarn brake complete	244 347
7	YC driving outside complete	245 297	20	Clamping bow	244 409
8	Friction feed wheel on the left co. 16-fold	244 991	21	Ceramic eyelet	240 640
9	Friction feed wheel on the right co. 16-fold	244 992	501	Washer 6	020 881
10	Yarn deflector on the left complete	244 517	502	Setting pin 6x16	020 677
11	Yarn deflector on the right complete	244 521	503	Screw M6x20	244 824
12	Left clamping/cutting bed E5-8	244 732	504	Screw KB60X20	237 682
13	Right clamping/cutting bed E5-8	244 731			

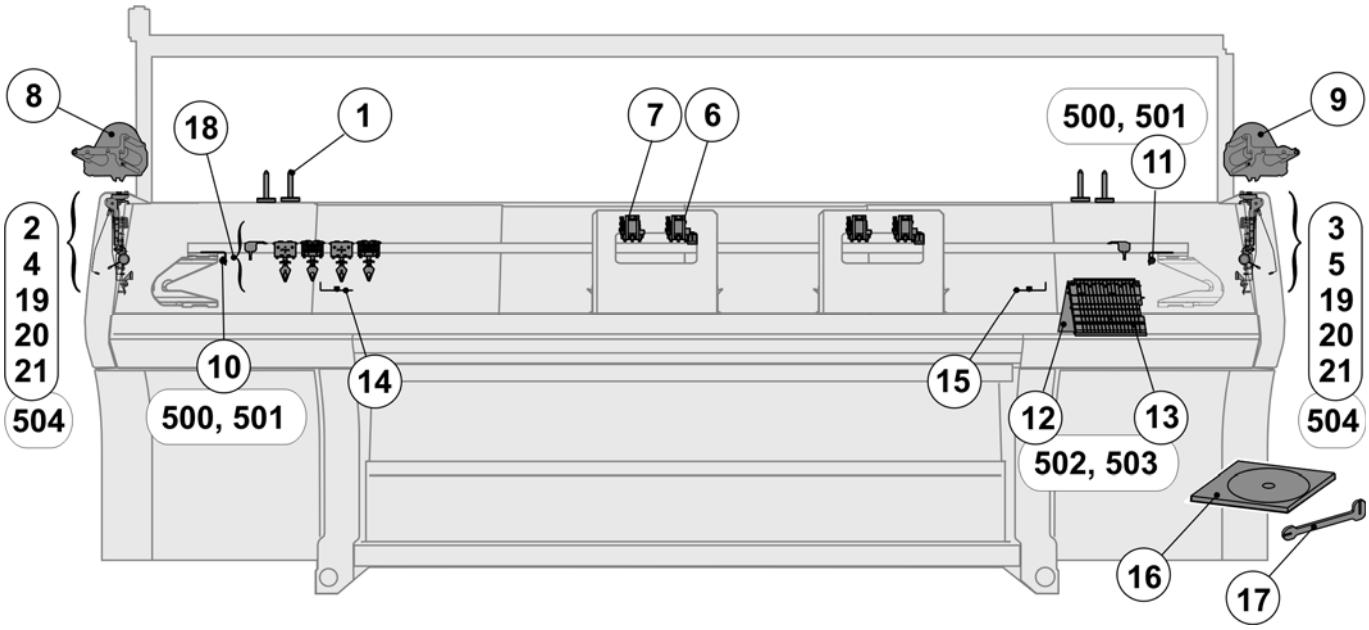

STOLL
THE RIGHT WAY TO KNIT

Overview of conversion kit E7-18

Pos	Designation	Ident No	Pos	Designation	Ident No
Σ	**CMS 822 conversion kit 32 IYC**				
	E7-8	**250 303**	19	Right clamping/cutting bed E5-8	244 731
	E10-14	**250 304**		Right clamping/cutting bed E10-14	244 610
	E16-18	**250 305**		Right clamping/cutting bed E16-18	244 062
1	Magnetic support complete	229 373	20	Yarn brake on the left	251 862
2	Yarn tensioner on the left complete E7-8	244 499	21	Yarn brake on the right	251 863
	Yarn tensioner on the left complete E10-18	244 500	22	DVD instructions conversion kit IYC	245 169
3	Yarn tensioner on the right complete E7-8	244 502	23	Additional board 7XX/8XX	241 928
	Yarn tensioner on the right complete E10-18	244 503	24	Adjusting part for yarn carrier bow	250 119
4	Yarn guide bar	236 932	25	Yarn guide complete E7-8 IYC	245 162
5	Support on the left	243 602		Yarn guide complete E10-14 IYC	245 163
6	Support on the right	243 603		Yarn guide complete E16-18 IYC	245 164
7	Support	239 295	26	Yarn brake complete	244 347
8	Deflector on the left complete	223 316	27	Clamping bow	244 409
9	Deflector on the right complete	223 049	28	Ceramic eyelet	240 640
10	Yarn control device	237 124	500	Self-locking screw M6x12	023 415
11	Yarn guide bracket complete	241 581	501	Ribbed safety nut M6-10	023 414
12	YC driving in the middle complete	245 298	502	Square nut M8	023 269
13	YC driving outside complete	245 297	503	Countersunk screw M8x16	023 113
14	Friction feed wheel on the left co. 16-fold	244 991	504	Cap screw M6X14	022 658
15	Friction feed wheel on the right co. 16-fold	244 992	505	Washer 6	020 881
16	Yarn deflector on the left complete	244 517	506	Setting pin 6x16	020 677
17	Yarn deflector on the right complete	244 521	507	Screw M6x20	244 824
18	Left clamping/cutting bed E5-8	244 732	508	Screw KB60X20	237 682
	Left clamping/cutting bed E10-14	244 643			
	Left clamping/cutting bed E16-18	244 821			

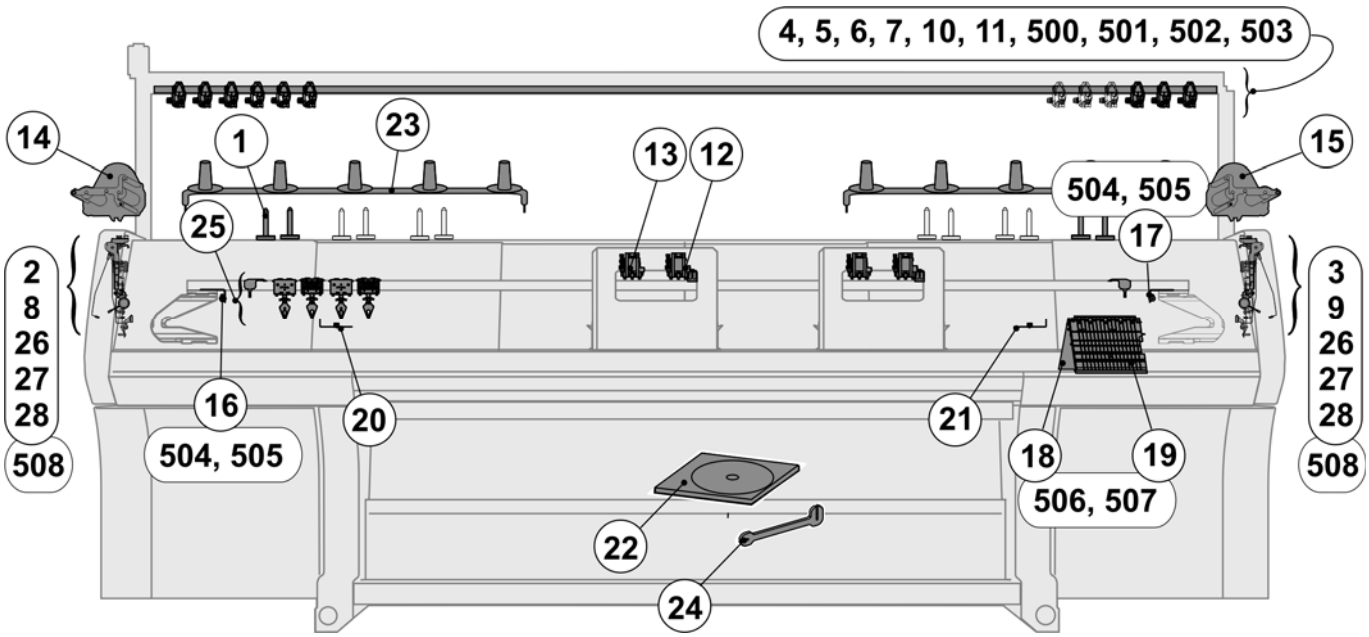

Magnetic support

Pos	*Designation*	*Ident No*		*Pos*	*Designation*	*Ident No*
Σ	**Magnetic support complete**	**229 373**				
1	Positioning pin	229 345		3	Felted round blank sheet 37mm	245 165
2	Flat gripper Pg40l	227 311		500	Countersunk head screw M5x16	023 417

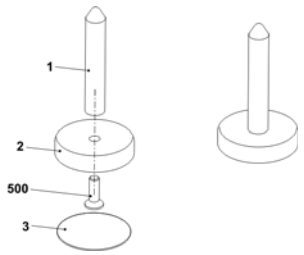

Parts for the left safety cover

Pos	Designation	Ident No		Pos	Designation	Ident No
2	Yarn tensioner on the left complete					
	E3 - E5 (E2,5.2/3,5.2/5.2)	244 498		26	Yarn brake complete	244 347
	E7 - E8 (E6.2)	244 499		27	Clamping bow	244 409
	E10 - E18 (E7.2/8.2)	244 500		28	Ceramic eyelet	240 640
8	Deflector on the left complete	223 316		508	Screw KB60X20	237 682

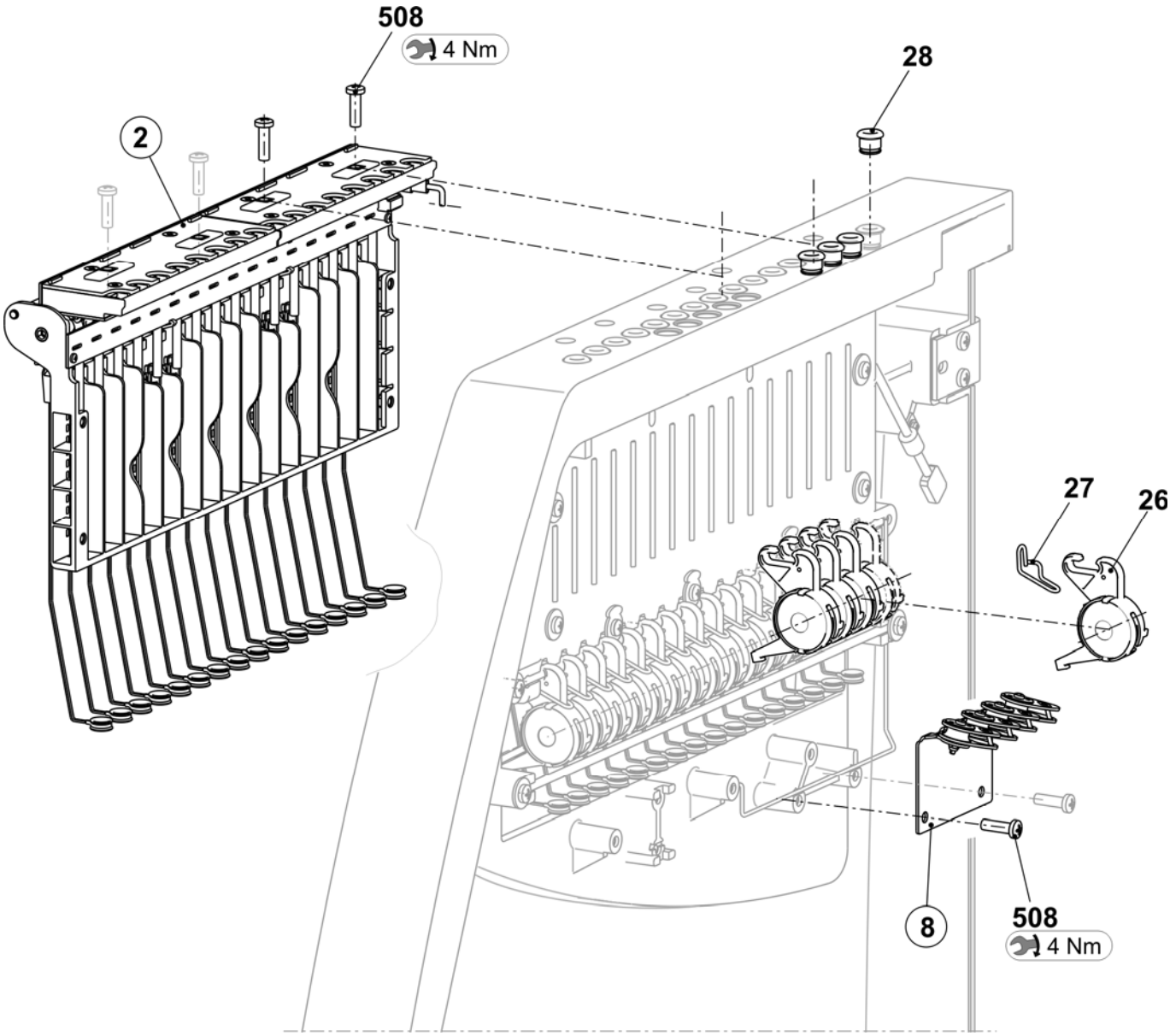

Parts for the right safety cover

Pos	Designation	Ident No		Pos	Designation	Ident No
4	Yarn tensioner on the right complete					
	E3 - E5 (E2,5.2/3,5.2/5.2)	244 501		26	Yarn brake complete	244 347
	E7 - E8 (E6.2)	244 502		27	Clamping bow	244 409
	E10 – E18 (E7.2/8.2)	244 503		28	Ceramic eyelet	240 640
9	Deflector on the right complete	223 049		508	Screw KB60X20	237 682

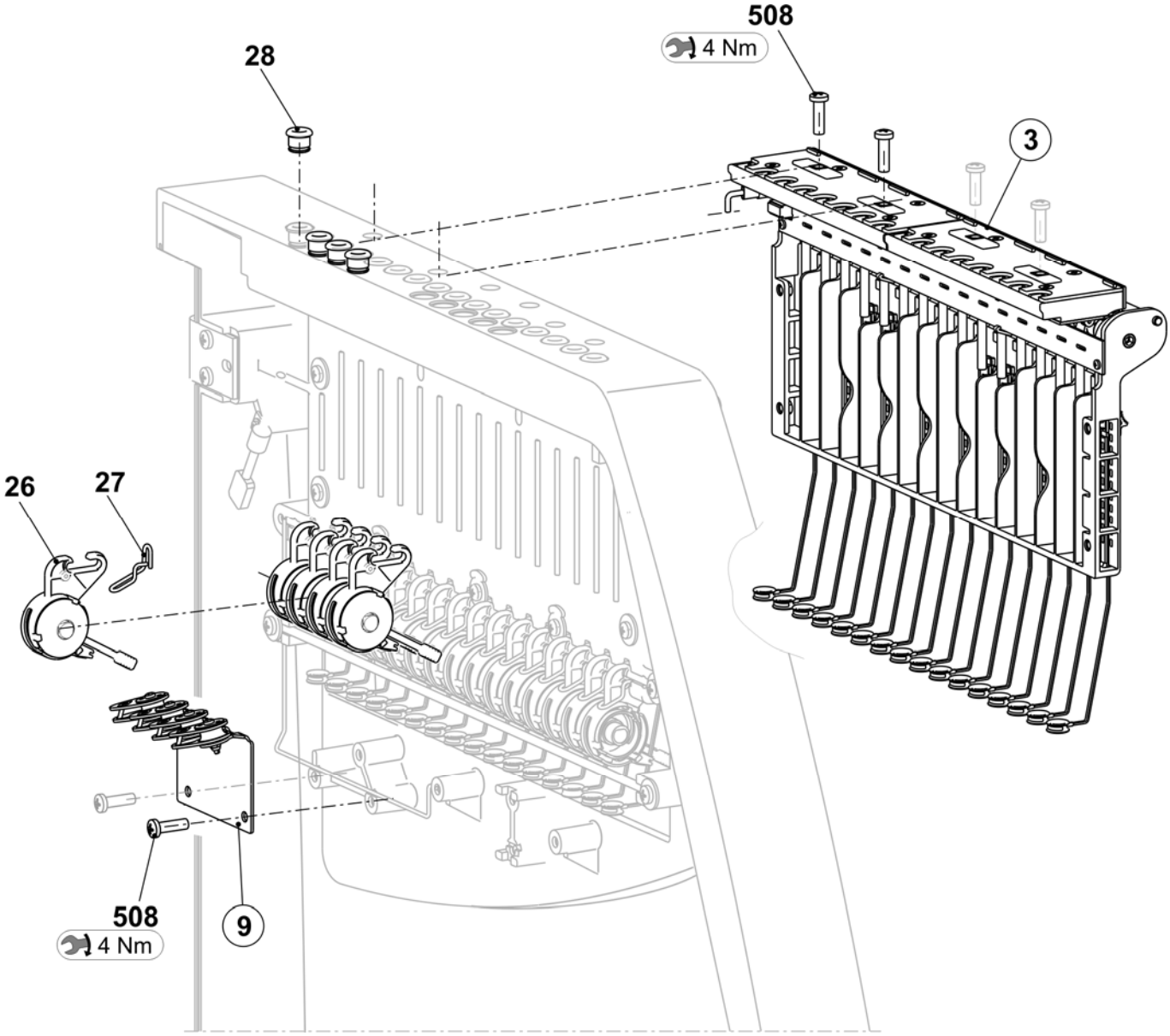

Parts for the yarn guide system (6 FKE)

Pos	Designation	Ident No	Pos	Designation	Ident No
Σ	**Parts for yarn guide system with 6 FKE (yarn control unit), E7-8**				
4	Yarn guide bar	240 324	11	Yarn guide bracket complete	241 581
5	Support on the left	243 602	500	Self-locking screw M6x12	023 415
6	Support on the right	243 603	501	Ribbed safety nut M6-10	023 414
7	Support	239 295	502	Square nut M8	023 269
10	Yarn control device	237 124	503	Countersunk screw M8x16	023 113

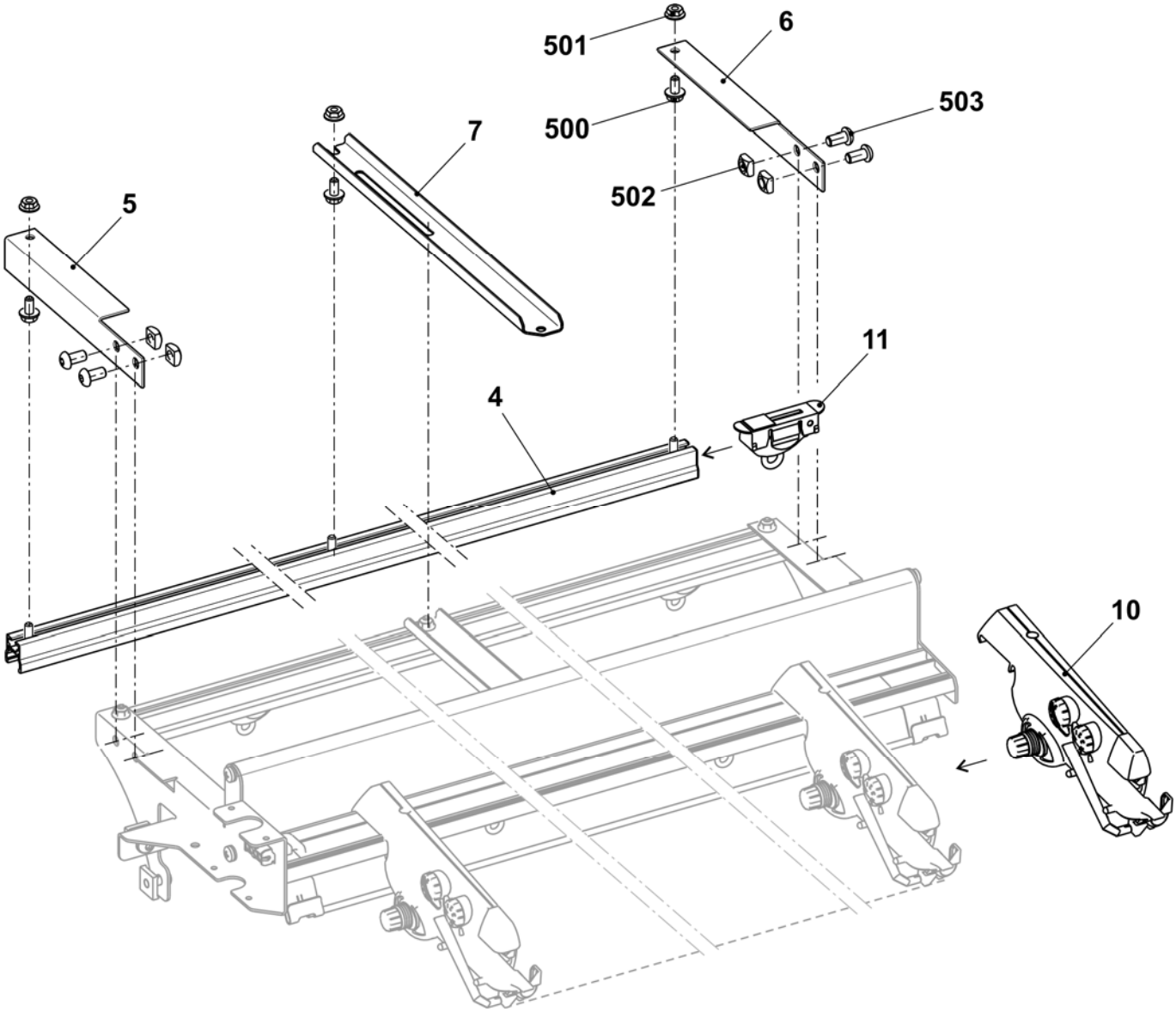

Parts for the yarn guide system (12 FKE)

Pos	Designation	Ident No		Pos	Designation	Ident No
Σ	**Parts for the yarn guide system with 12 FKE, E10-14, E16-18**					
4	Yarn guide bar	240 324		11	Yarn guide bracket complete	241 581
5	Support on the left	243 602		500	Self-locking screw M6x12	023 415
6	Support on the right	243 603		501	Ribbed safety nut M6-10	023 414
7	Support	239 295		502	Square nut M8	023 269
10	Yarn control device	237 124		503	Countersunk screw M8x16	023 113

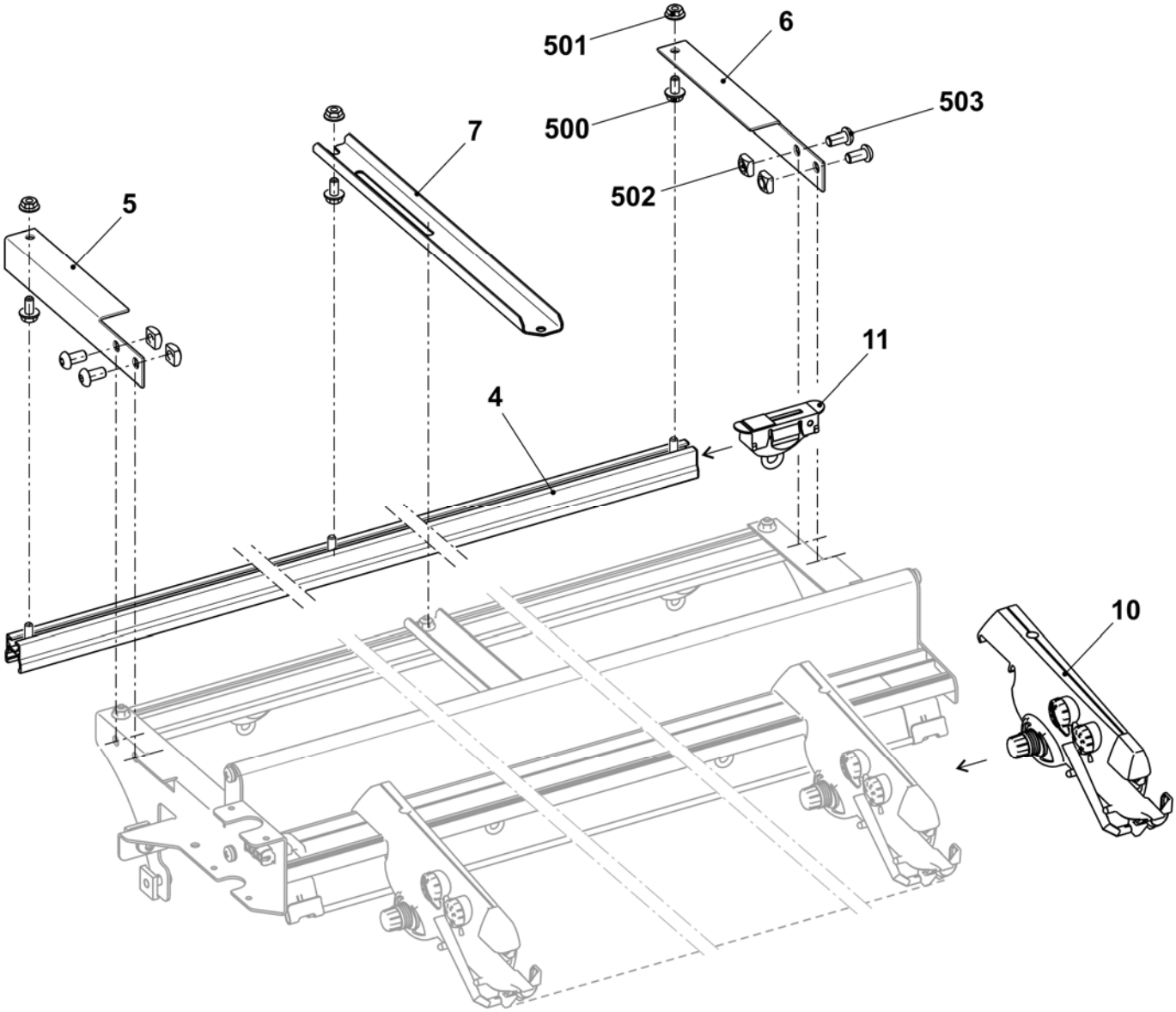

Driving in the middle

Pos	Designation	Ident No		Pos	Designation	Ident No
Σ	**YC driving in the middle complete**	**245 298**		7	Card yarn carrier final stages OKC	300 960
1	Yarn carrier plunger on the right complete	243 080		500	Cap screw M4x14-I-Torx	242 279
2	Yarn carrier plunger on the left complete	243 118		501	Cap screw M4x25-I-Torx	245 305
3	Support angle for jack	245 313		502	Cap screw M3x12-12.9	022 648
4	Mounting block in the middle	245 308		503	Screw KB60X20	243 625
5	Switch mechanism	245 312		900	Shoulder screw	231 899
6	Guiding part	239 972		901	Cap screw M6x16	020 135

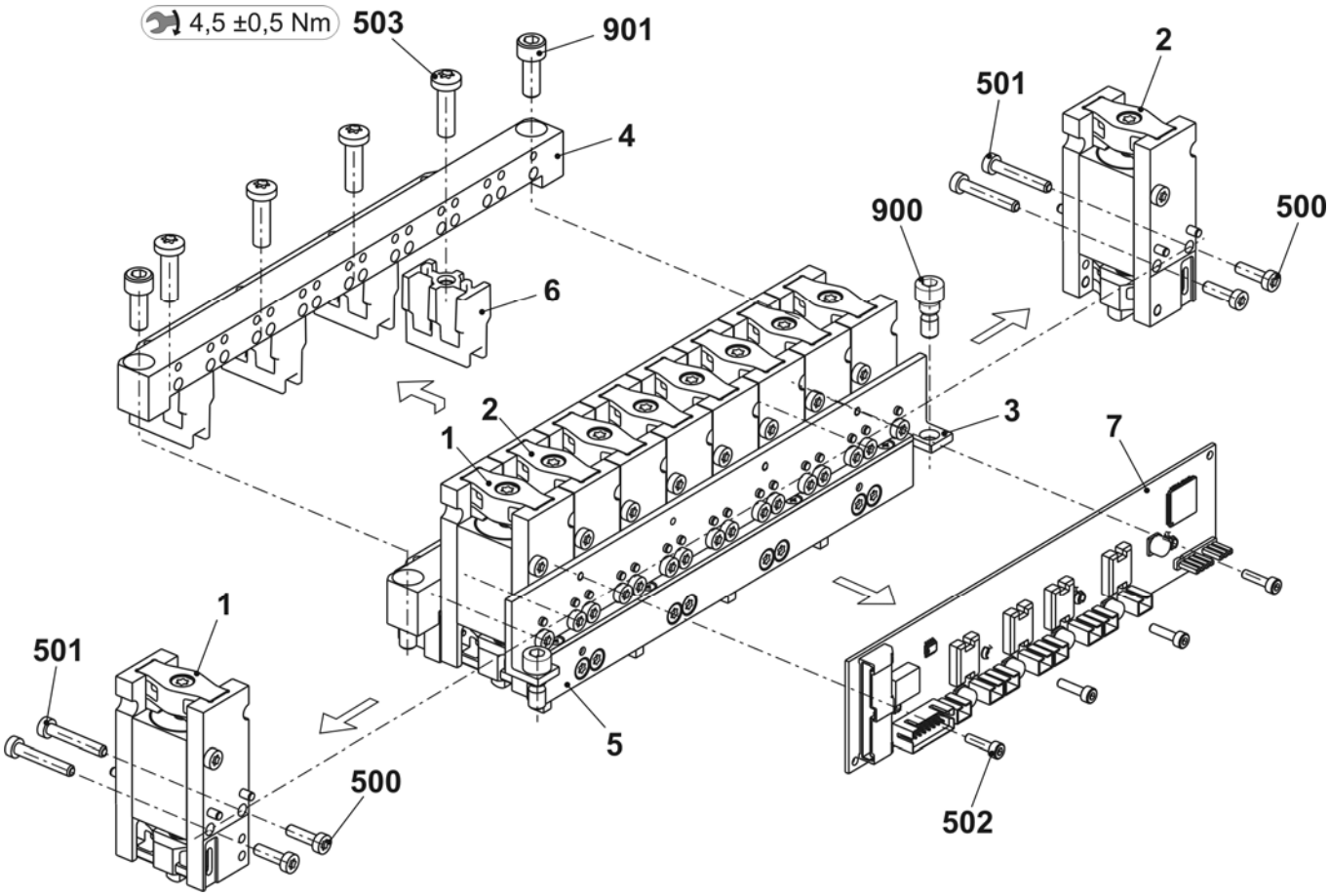

Driving outside

Pos	Designation	Ident No		Pos	Designation	Ident No
Σ	**YC driving outside complete**	**245 297**		6	Switch mechanism	245 312
1	Yarn carrier plunger on the right complete	243 080		500	Cap screw M4x14-I-Torx	242 279
2	Yarn carrier plunger on the left complete	243 118		501	Cap screw M4x25-I-Torx	245 305
3	Support angle for jack	245 313		502	Cap screw M3x12-12.9	022 648
4	Mounting block outside	245 294		900	Shoulder screw	231 899
5	Card yarn carrier final stages OKC	300 960		901	Cap screw M6x16	020 135

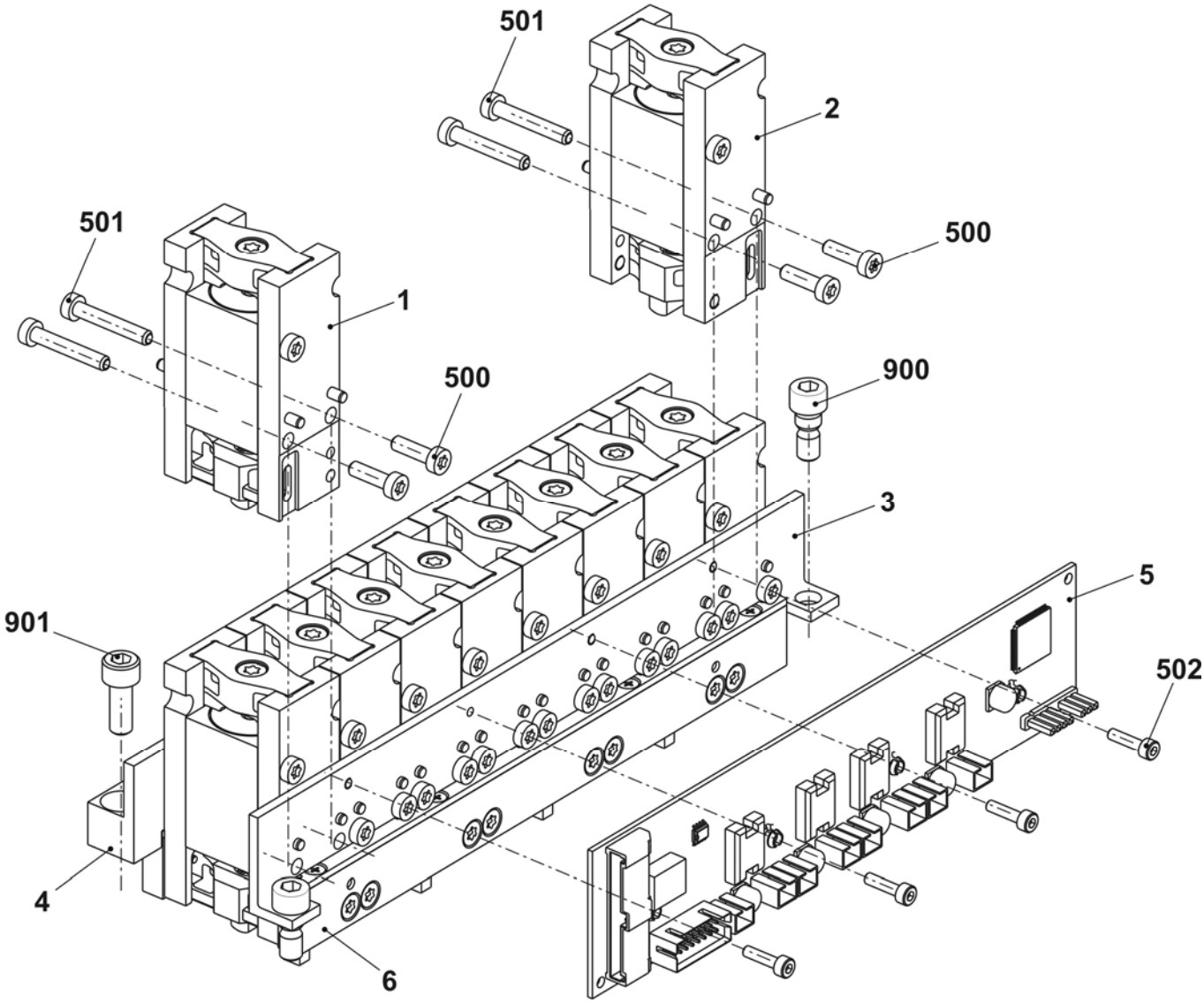

Friction feed wheel on the left

Pos	Designation		Ident No	Pos	Designation	Ident No
Σ	**Friction feed wheel on the left co. 16-fold**		**244 991**			
1	Housing		240 368	9	Strap	244 515
2	Friction roller complete		243 860	10	Cover	230 759
3	Three-phase A.C. motor 3x42V complete		219 800	11	Bush	221 391
	3a	Three-phase A.C. motor	220 161	12	Ribbed V-belt pulley	221 268
	3b	Microswitch	008 664	13	Ribbed V-belt	206 927
5	Yarn guide rod 16-fold complete		244 576	14	Rod	243 868
6	Yarn guide rod 16-fold complete		244 578	15	Cover	230 758
	6a	Yarn guide rod 16-fold	244 577	500	Screw KB30x8	236 228
	6b	Ceramic eyelet	240 640	501	Cap screw M20x10	244 736
7	Stop motion rail on the right complete		243 863	502	Cap screw M5x12	020 132
	7a	Stop motion rail on the right	243 864	503	Cap screw M5x16	022 726
	570	Slide bearing GFM-101214-07	023 627	504	Cap screw M5x25	023 523
	571	O-ring 10x1.3	244 895	506	Washer 5.3x22x2.5	023 219
8	Stop motion rail on the left complete		243 865	507	Washer 5	020 901
	8a	Stop motion rail on the left	243 866	508	Shim ring 15x21x1	023 216
	8b	Eyelet	230 662	510	Washer 5.3x18x1.5	020 909
	580	Slide bearing GFM-101214-07	023 627	511	Countersunk screw M5x8	239 408
	581	O-ring 10x1.3	244 895			

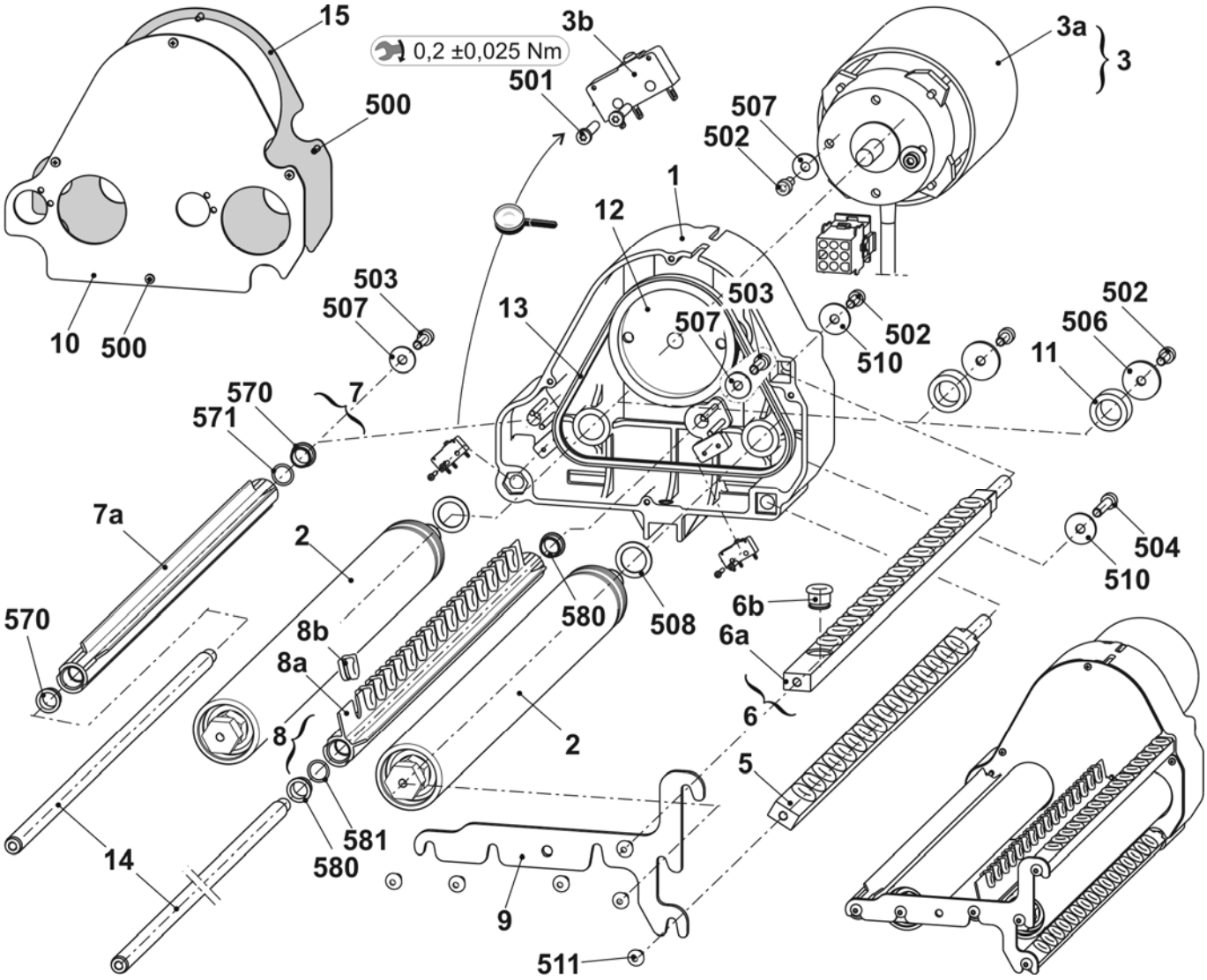

Friction feed wheel on the right

Pos	Designation		Ident No	Pos	Designation	Ident No
Σ	**Friction feed wheel on the right co. 16-fold**		**244 992**			
1	Housing		240 368	9	Strap	244 515
2	Friction roller complete		243 860	10	Cover	230 759
3	Three-phase A.C. motor 3x42V complete		219 800	11	Bush	221 391
	3a	Three-phase A.C. motor	220 161	12	Ribbed V-belt pulley	221 268
	3b	Microswitch	008 664	13	Ribbed V-belt	206 927
5	Yarn guide rod 16-fold complete		244 576	14	Rod	243 868
6	Yarn guide rod 16-fold complete		244 578	15	Cover	230 758
	6a	Yarn guide rod 16-fold	244 577	500	Screw KB30x8	236 228
	6b	Ceramic eyelet	240 640	501	Cap screw M20x10	244 736
7	Stop motion rail on the right complete		243 863	502	Cap screw M5x12	020 132
	7a	Stop motion rail on the right	243 864	503	Cap screw M5x16	022 726
	570	Slide bearing GFM-101214-07	023 627	504	Cap screw M5x25	023 523
	571	O-ring 10x1.3	244 895	506	Washer 5.3x22x2.5	023 219
8	Stop motion rail on the right complete		244 530	507	Washer 5	020 901
	8a	Stop motion rail on the right	244 531	508	Shim ring 15x21x1	023 216
	8b	Eyelet	230 662	510	Washer 5.3x18x1.5	020 909
	580	Slide bearing GFM-101214-07	023 627	511	Countersunk screw M5x8	239 408
	581	O-ring 10x1.3	244 895			

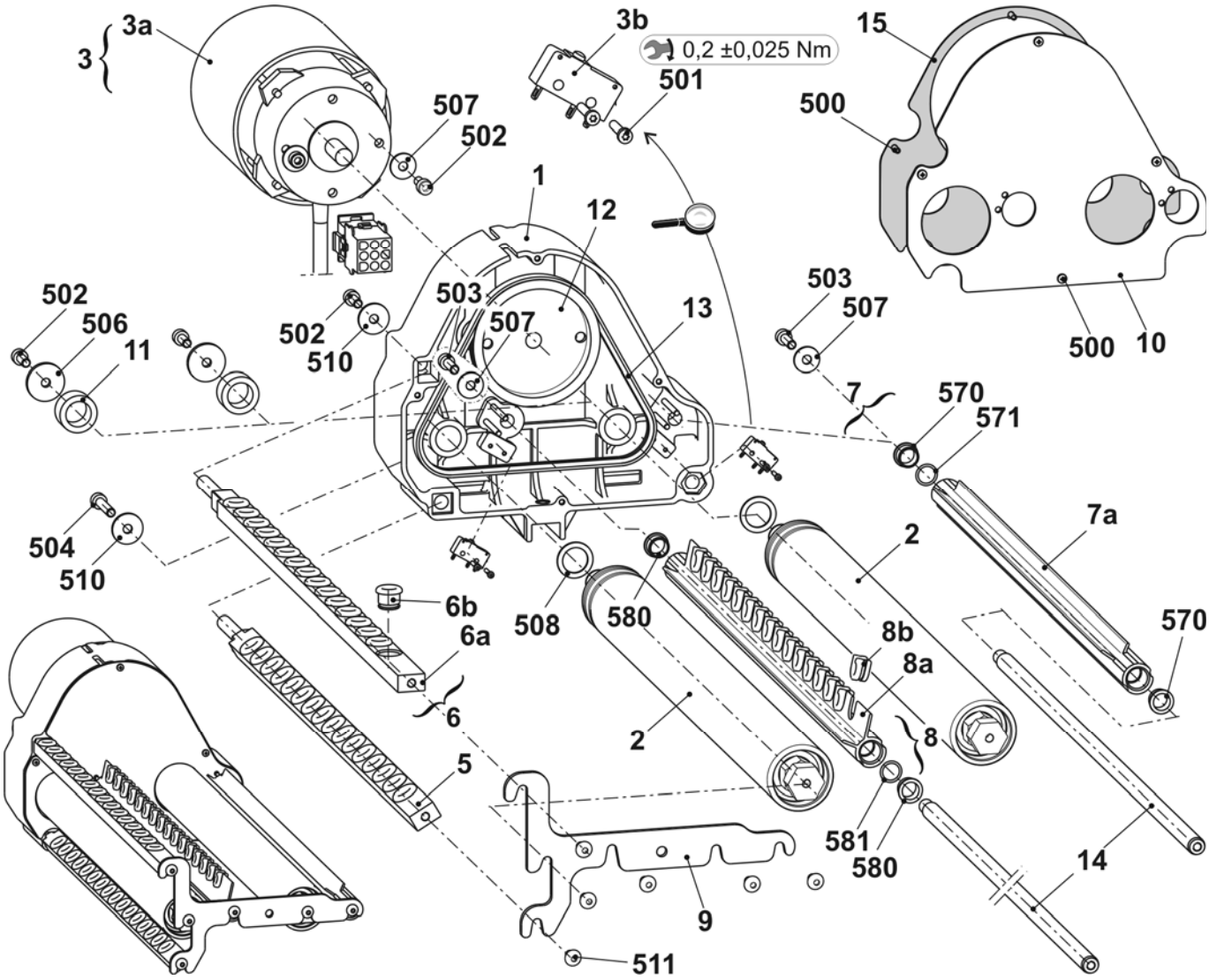

Thread deflector on the left

Pos	Designation	Ident No	Pos	Designation	Ident No
Σ	**Yarn deflector on the left complete**	**244 517**			
1	Support angle	244 516	502	Washer 6	020 881
2	Bolt	214 894	503	Washer 6	022 853
3	Yarn carrier MH 6	200 127	504	O-ring 6x3	022 856
500	Countersunk screw M6x10	023 183	504*	Cap screw M6X14	022 658
501	Cap screw M6x80	023 064	505*	Washer 6	020 881

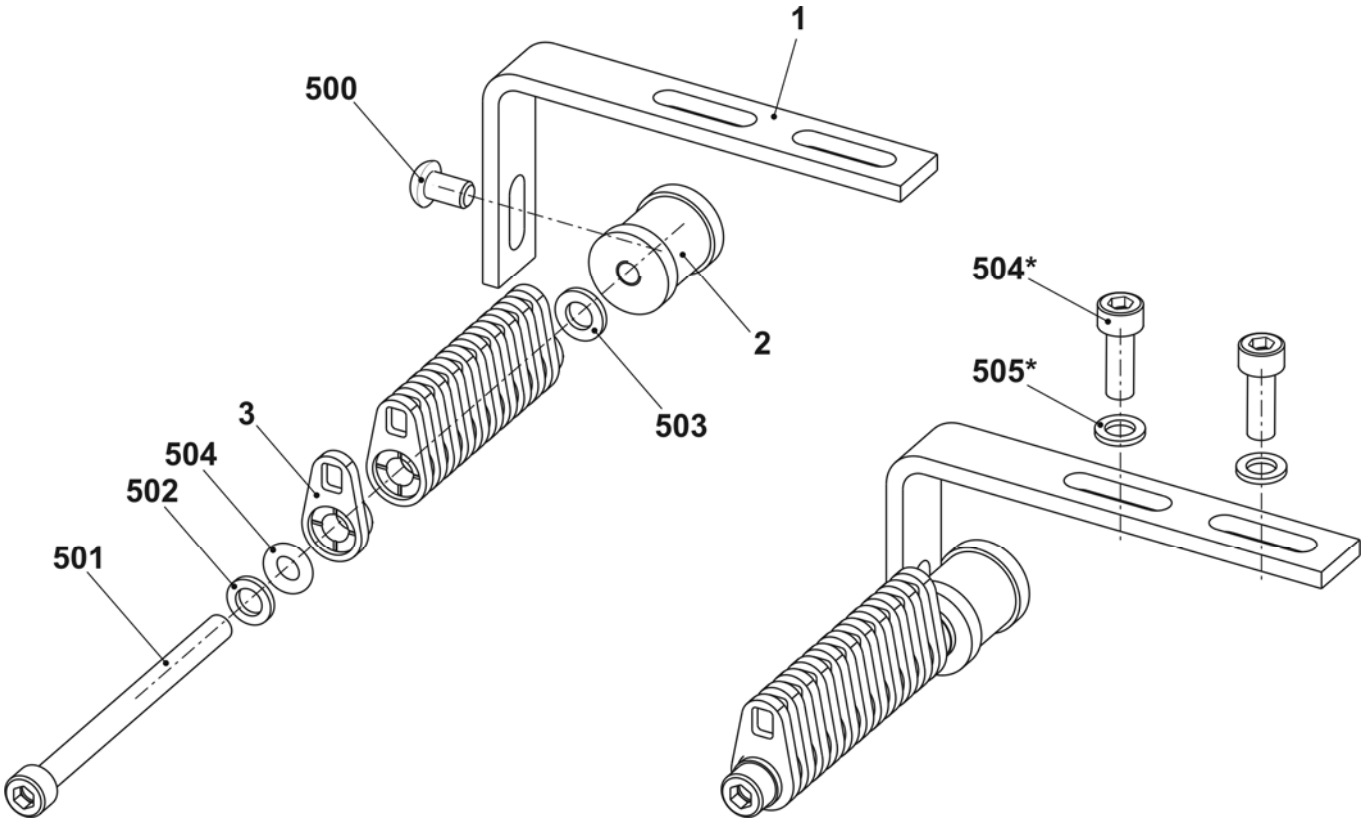

Yarn deflector on the right

Pos	Designation	Ident No		Pos	Designation	Ident No
Σ	**Yarn deflector on the right complete**	**244 521**				
1	Support angle	244 516		502	Washer 6	020 881
2	Bolt	214 894		503	Washer 6	022 853
3	Yarn carrier MH 6	200 127		504	O-ring 6x3	022 856
500	Countersunk screw M6x10	023 183		504*	Cap screw M6X14	022 658
501	Cap screw M6x80	023 064		505*	Washer 6	020 881

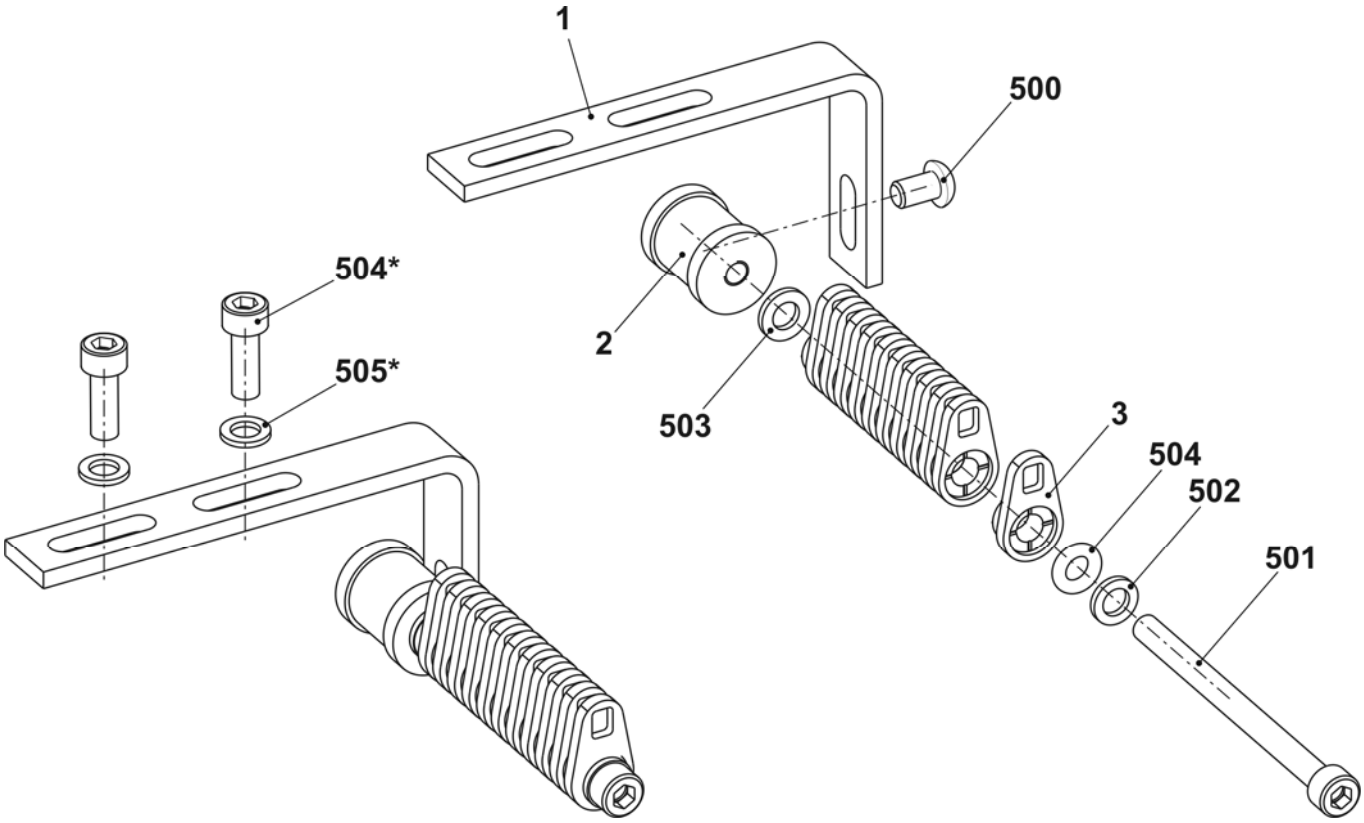

Left clamping/cutting bed E5-8

Pos	Designation		Ident No	Pos	Designation	Ident No
Σ	**Left clamping/cutting bed E5-8**		**244 732**			
1	Guide plate on the left E5-14		244 642	8	Spring holder	244 590
	1a	Guide plate on the left E5-14	244 632	9	Holding strip on the left	250 607
	1b	Cover rail	243 923	10	Tuck needle on the left E5-8	244 729
	1c	Cover rail	243 924	11	Intermediate cam E10-14	244 591
	1d	Fixed wire	243 925	12	Coupling part E4-E8	200 682
	1e	Axle	211 349	13	Intermediate slider with brake E5-E8	237 323
	1f	Guide pin	211 351	14	Selection jack E4-E8	200 687
	1g	Fixed wire	244 588	15	Selector spring E4-E8	200 690
	1h	Fixed wire	244 589	500	Cap screw M4x10	023 136
	510	Setting pin 3x16	020 649	501	Hexagon nut M4-8	023 046
	511	Set screw M5x5	236 061	502	Washer 4	020 870
2	Cover on the left complete		211 771	503	Countersunk head screw M3x10	242 029
3	Catch hook on the left		213 151	504	Tension spring 5x0.5x17.4	023 377
4	Slider E4-8		211 096	505	Compression spring D 117 W 07x4.3x12.1	023 521
5	Blade		243 948	506	Set screw M6x8-45H	022 581
6	Clamp on the left complete		244 633	560*	Setting pin 6x16	023 335
7	Spring holder		244 032	570*	Cap screw M6x20	244 824

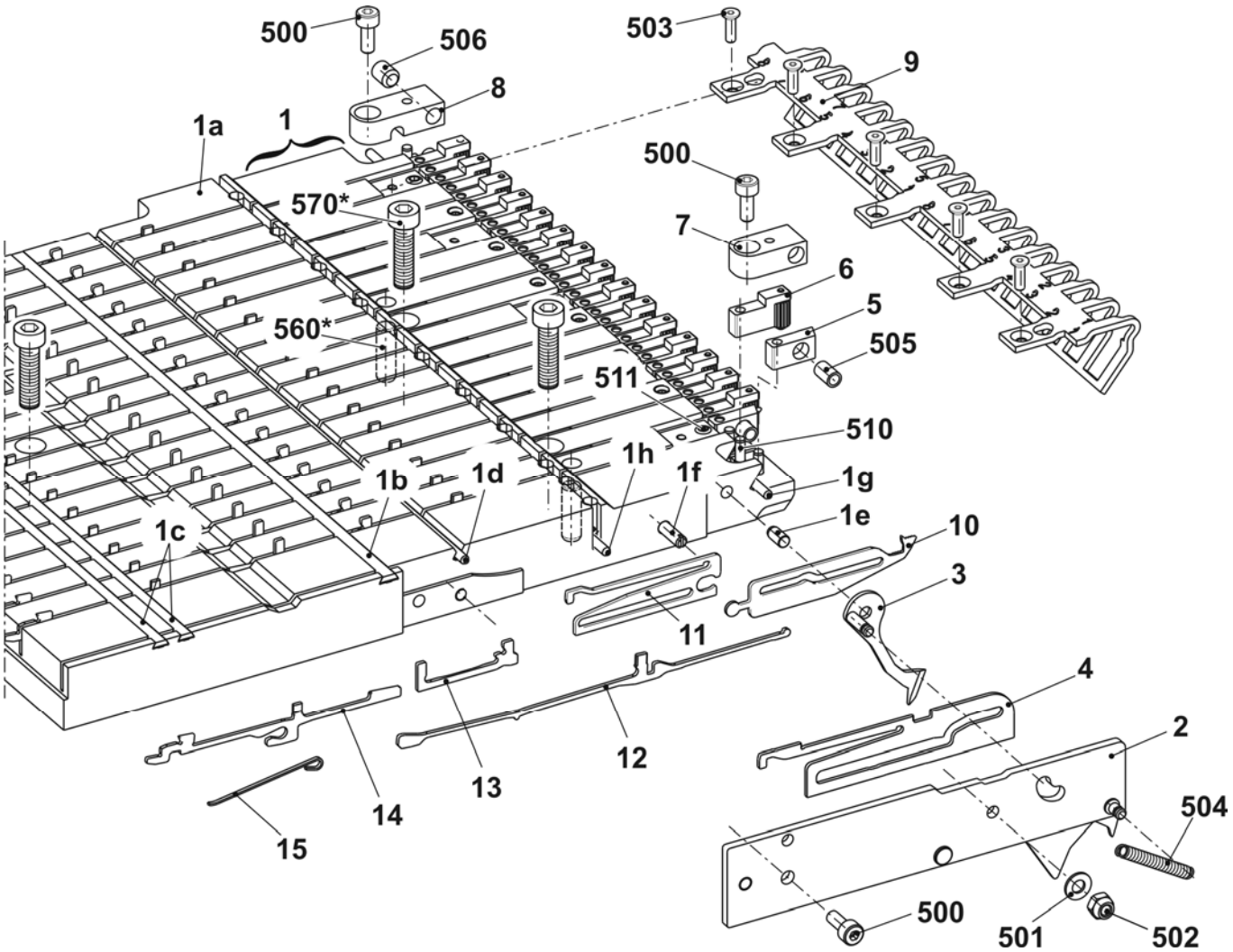

Left clamping/cutting bed E10-14

Pos	*Designation*		*Ident No*	*Pos*	*Designation*	*Ident No*
Σ	**Left clamping/cutting bed E10-14**		**244 643**			
1	Guide plate on the left E5-14		244 642	8	Spring holder	244 590
	1a	Guide plate on the left E5-14	244 632	9	Holding strip on the left	250 607
	1b	Cover rail	243 923	10	Tuck needle on the left E10-14	244 630
	1c	Cover rail	243 924	11	Intermediate cam E10-14	244 591
	1d	Fixed wire	243 925	12	Coupling part E4-E8	200 682
	1e	Axle	211 349	13	Intermediate slider with brake E5-E8	237 323
	1f	Guide pin	211 351	14	Selection jack E10-14	200 687
	1g	Fixed wire	244 588	15	Selector spring E4-E8	200 690
	1h	Fixed wire	244 589	500	Cap screw M4x10	023 136
	510	Setting pin 3x16	020 649	501	Hexagon nut M4-8	023 046
	511	Set screw M5x5	236 061	502	Washer 4	020 870
2	Cover on the left complete		211 771	503	Countersunk head screw M3x10	242 029
3	Catch hook on the left		213 151	504	Tension spring 5x0.5x17.4	023 377
4	Slider E10-14		211 104	505	Compression spring D 117 W 07x4.3x12.1	023 521
5	Blade		243 948	506	Set screw M6x8-45H	022 581
6	Clamp on the left complete		244 633	560*	Setting pin 6x16	023 335
7	Spring holder		244 032	570*	Cap screw M6x20	244 824

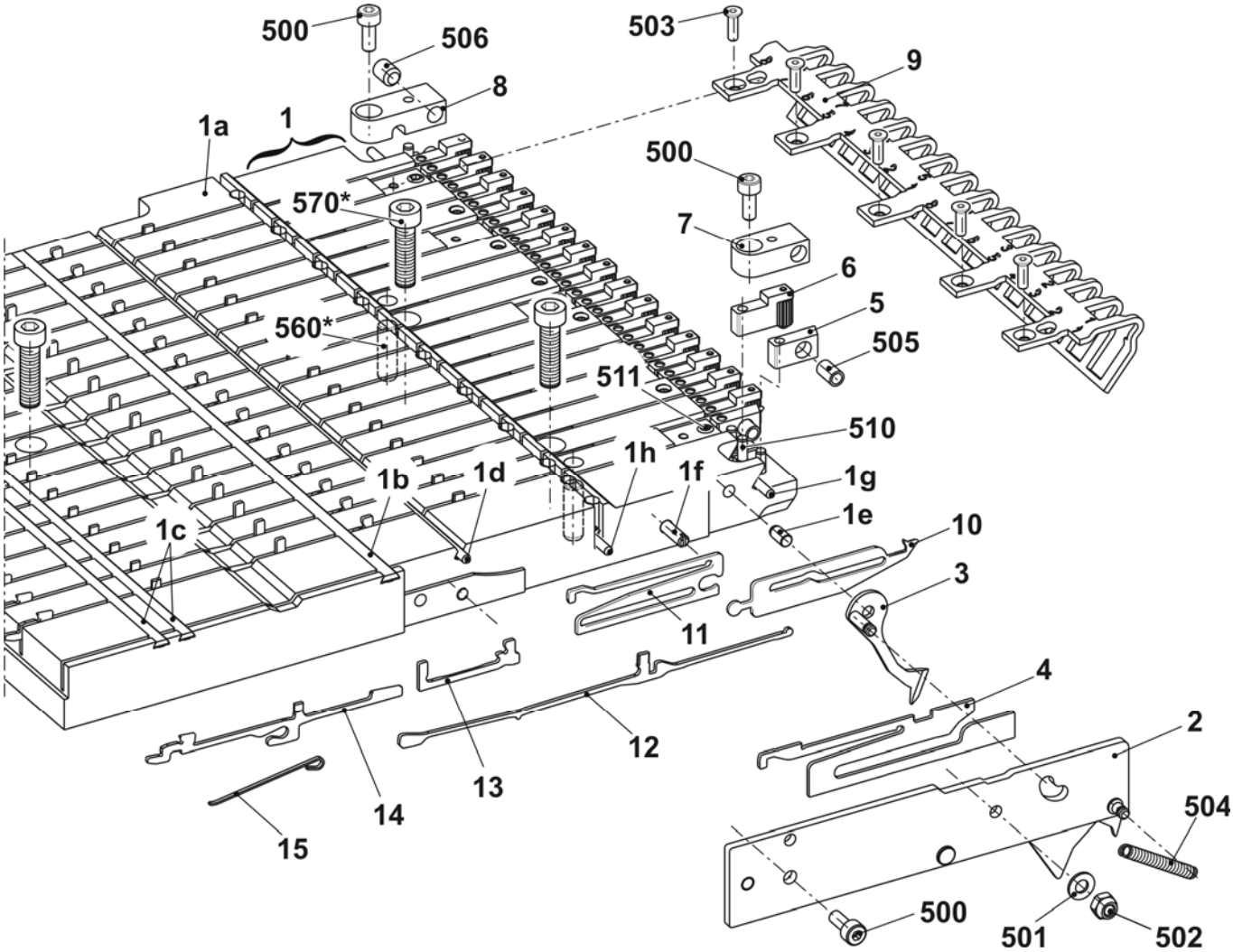

Left clamping/cutting bed E16-18

Pos	Designation		Ident No	Pos	Designation	Ident No
Σ	**Left clamping/cutting bed E16-18**		**244 821**			
1	Guide plate on the left E16-18		244 760	8	Spring holder	244 590
	1a	Guiding plate on the left	244 738	9	Holding strip on the left	250 607
	1b	Cover rail	243 923	10	Tuck needle on the left E16-18	244 740
	1c	Cover rail	243 924	11	Intermediate cam (E16-18)	244 741
	1d	Fixed wire	243 925	12	Coupling part E10-12	200 683
	1e	Axle	211 349	13	Intermediate slider with brake E10-12	237 324
	1f	Guide pin	211 351	14	Selection jack E10-12	200 688
	1g	Fixed wire	244 588	15	Selector spring E10-12	200 691
	1h	Fixed wire	244 589	500	Cap screw M4x10	023 136
	510	Setting pin 3x16	020 649	501	Hexagon nut M4-8	023 046
	511	Set screw M5x5	236 061	502	Washer 4	020 870
2	Cover on the left complete E16-20		242 835	503	Countersunk head screw M3x10	242 029
3	Catch needle on the left E16-18		242 831	504	Tension spring 5x0.5x17.4	023 377
4	Slider E16-20		242 828	505	Compression spring D 117 W 07x4.3x12.1	023 521
5	Blade		243 948	506	Set screw M6x8-45H	022 581
6	Clamp on the left complete		244 633	560*	Setting pin 6x16	023 335
7	Spring holder		244 032	570*	Cap screw M6x20	244 824

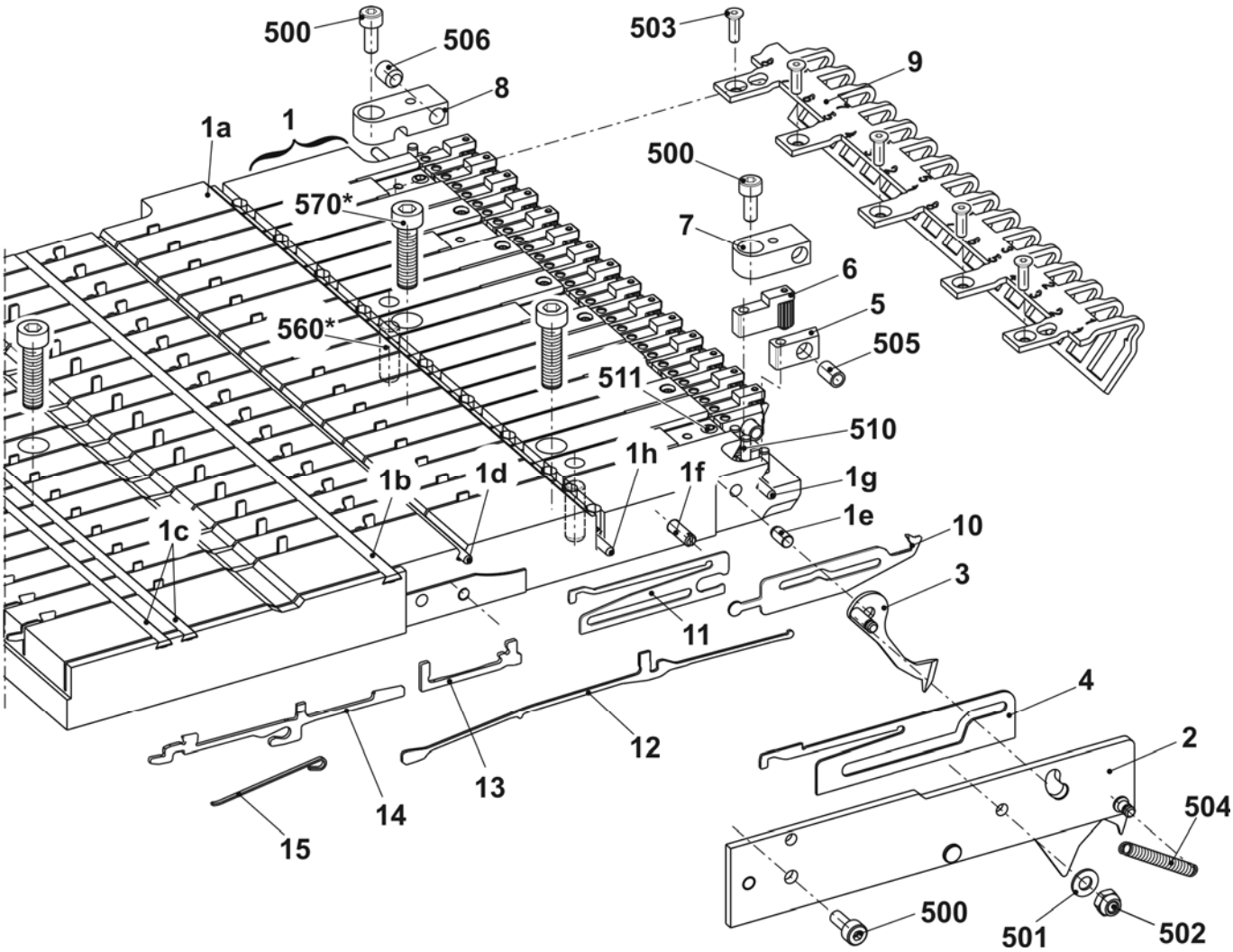

Right clamping/cutting bed E5-8

Pos		Designation	Ident No	Pos	Designation	Ident No
Σ		**Right clamping/cutting bed E5-8**	**244 731**			
1		Guide plate on the right E5-14	244 601	8	Spring holder	244 590
	1a	Guide plate on the right E5-14	244 586	9	Holding strip on the right	250 510
	1b	Cover rail	243 923	10	Tuck needle on the right E5-8	244 728
	1c	Cover rail	243 924	11	Intermediate cam E10-14	244 591
	1d	Fixed wire	243 925	12	Coupling part E4-E8	200 682
	1e	Axle	211 349	13	Intermediate slider with brake E5-E8	237 323
	1f	Guide pin	211 351	14	Selection jack E4-E8	200 687
	1g	Fixed wire	244 588	15	Selector spring E4-E8	200 690
	1h	Fixed wire	244 589	500	Cap screw M4x10	023 136
	510	Setting pin 3x16	020 649	501	Hexagon nut M4-8	023 046
	511	Set screw M5x5	236 061	502	Washer 4	020 870
2		Cover on the right complete	211 347	503	Countersunk head screw M3x10	242 029
3		Catch hook on the right	213 150	504	Tension spring 5x0.5x17.4	023 377
4		Slider E4-8	211 096	505	Compression spring D 117 W 07x4.3x12.1	023 521
5		Blade	243 948	506	Set screw M6x8-45H	022 581
6		Clamp on the right complete	244 602	560*	Setting pin 6x16	023 335
7		Spring holder	244 032	570*	Cap screw M6x20	244 824

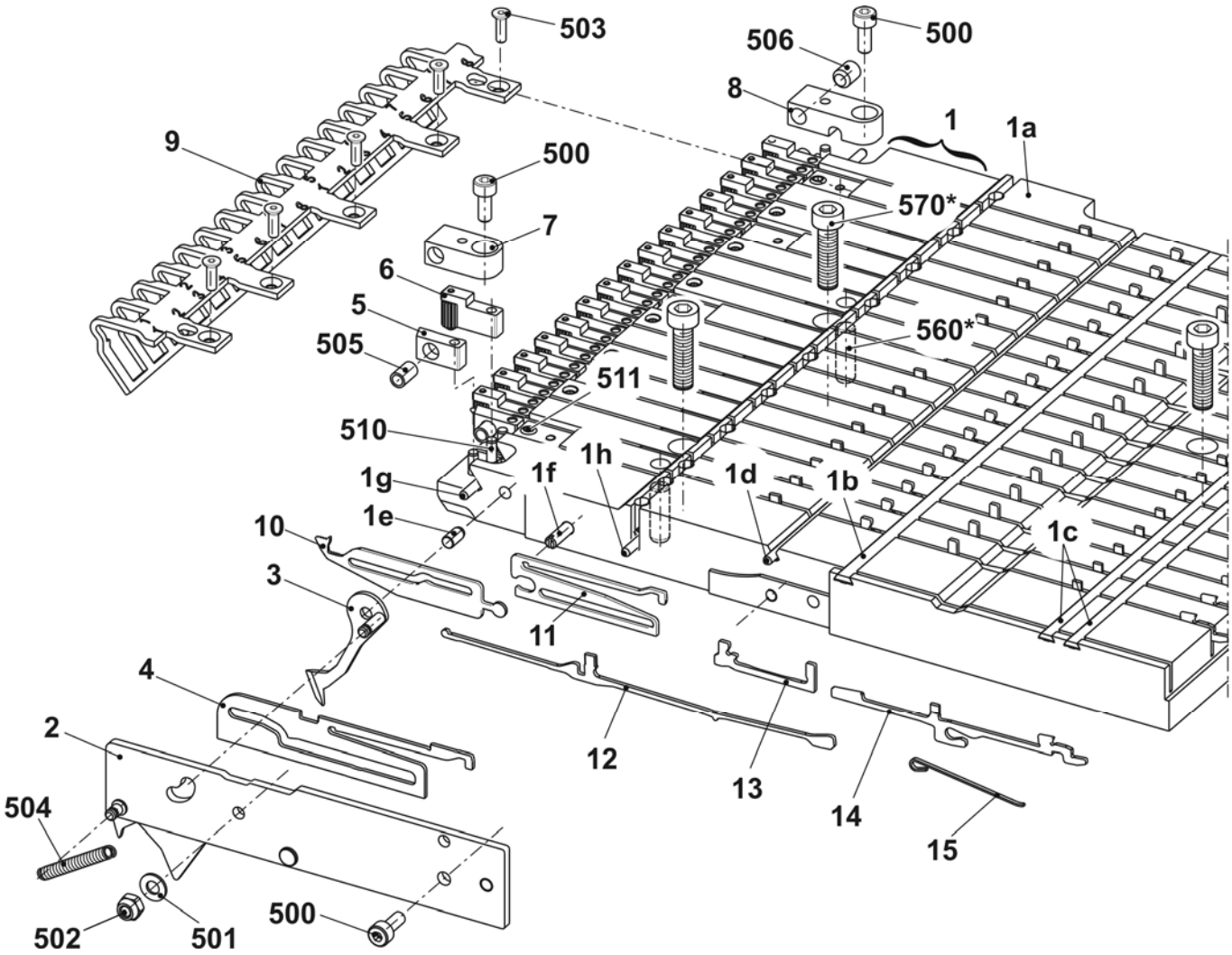

STOLL
THE RIGHT WAY TO KNIT

Right clamping/cutting bed E10-14

Pos	Designation		Ident No	Pos	Designation	Ident No
Σ	**Right clamping/cutting bed E10-14**		**244 610**			
1	Guide plate on the right E5-14		244 601	8	Spring holder	244 590
	1a	Guide plate on the right E5-14	244 586	9	Holding strip on the right	250 510
	1b	Cover rail	243 923	10	Tuck needle on the right E10-14	244 592
	1c	Cover rail	243 924	11	Intermediate cam E10-14	244 591
	1d	Fixed wire	243 925	12	Coupling part E4-E8	200 682
	1e	Axle	211 349	13	Intermediate slider with brake E5-E8	237 323
	1f	Guide pin	211 351	14	Selection jack E10-14	200 687
	1g	Fixed wire	244 588	15	Selector spring E4-E8	200 690
	1h	Fixed wire	244 589	500	Cap screw M4x10	023 136
	510	Setting pin 3x16	020 649	501	Hexagon nut M4-8	023 046
	511	Set screw M5x5	236 061	502	Washer 4	020 870
2	Cover on the right complete		211 347	503	Countersunk head screw M3x10	242 029
3	Catch hook on the right		213 150	504	Tension spring 5x0.5x17.4	023 377
4	Slider E10-14		211 104	505	Compression spring D 117 W 07x4.3x12.1	023 521
5	Blade		243 948	506	Set screw M6x8-45H	022 581
6	Clamp on the right complete		244 602	560*	Setting pin 6x16	023 335
7	Spring holder		244 032	570*	Cap screw M6x20	244 824

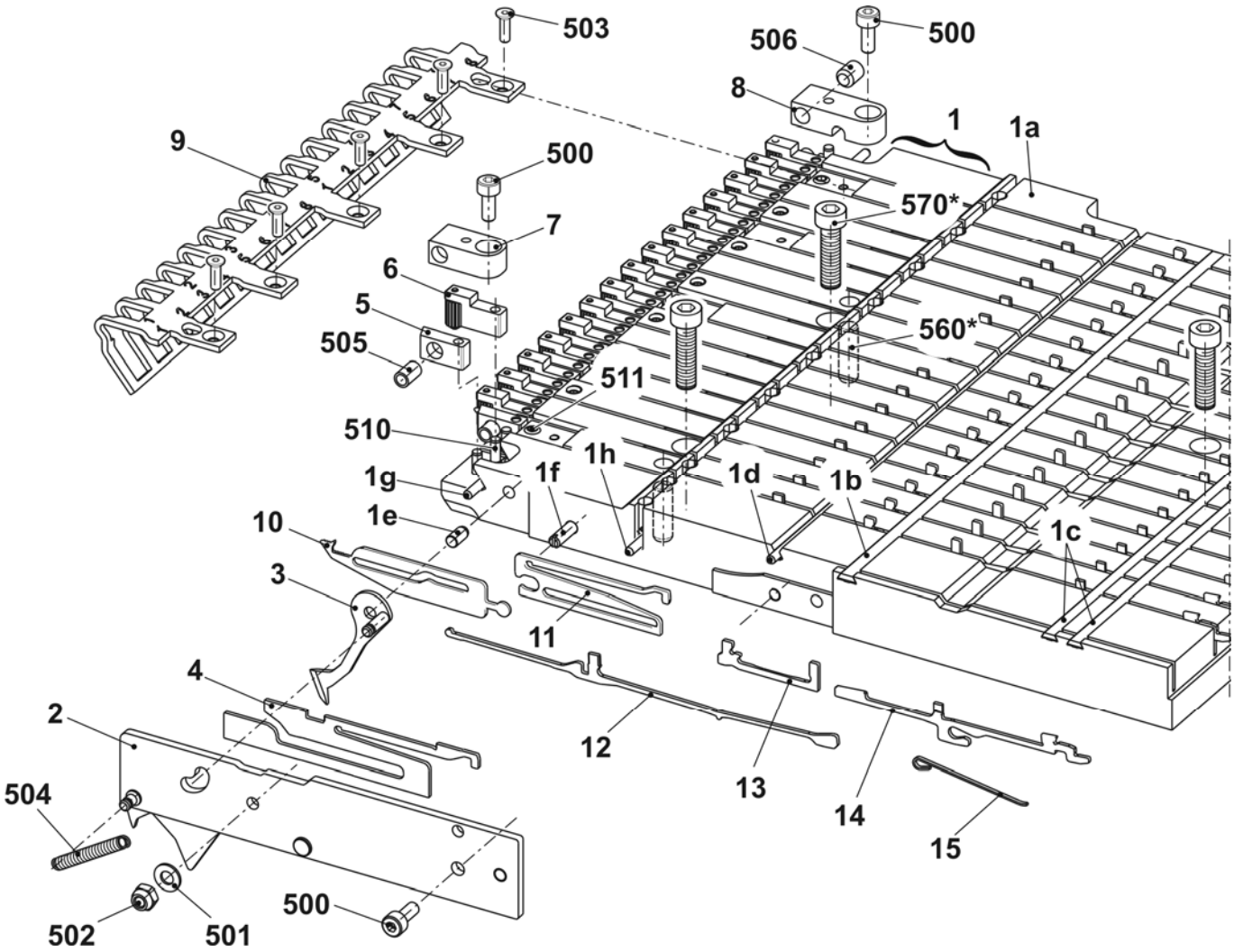

Right clamping/cutting bed E16-18

Pos		Designation	Ident No	Pos	Designation	Ident No
Σ		**Right clamping/cutting bed E16-18**	**244 062**			
1		Guide plate on the right E16-18	244 759	8	Spring holder	244 590
	1a	Guide plate on the right	244 737	9	Holding strip on the right	250 510
	1b	Cover rail	243 923	10	Tuck needle on the right E16-18	244 739
	1c	Cover rail	243 924	11	Intermediate cam E10-14	244 591
	1d	Fixed wire	243 925	12	Coupling part E10-12	200 683
	1e	Axle	211 349	13	Intermediate slider with brake E10-12	237 324
	1f	Guide pin	211 351	14	Selection jack E10-12	200 688
	1g	Fixed wire	244 588	15	Selector spring E10-12	200 691
	1h	Fixed wire	244 589	500	Cap screw M4x10	023 136
	510	Setting pin 3x16	020 649	501	Hexagon nut M4-8	023 046
	511	Set screw M5x5	236 061	502	Washer 4	020 870
2		Cover on the right complete E16-20	242 836	503	Countersunk head screw M3x10	242 029
3		Catch hook on the right E16-18	242 833	504	Tension spring 5x0.5x17.4	023 377
4		Slider E16-20	242 828	505	Compression spring D 117 W 07x4.3x12.1	023 521
5		Blade	243 948	506	Set screw M6x8-45H	022 581
6		Clamp on the right complete	244 602	560*	Setting pin 6x16	023 335
7		Spring holder	244 032	570*	Cap screw M6x20	244 824

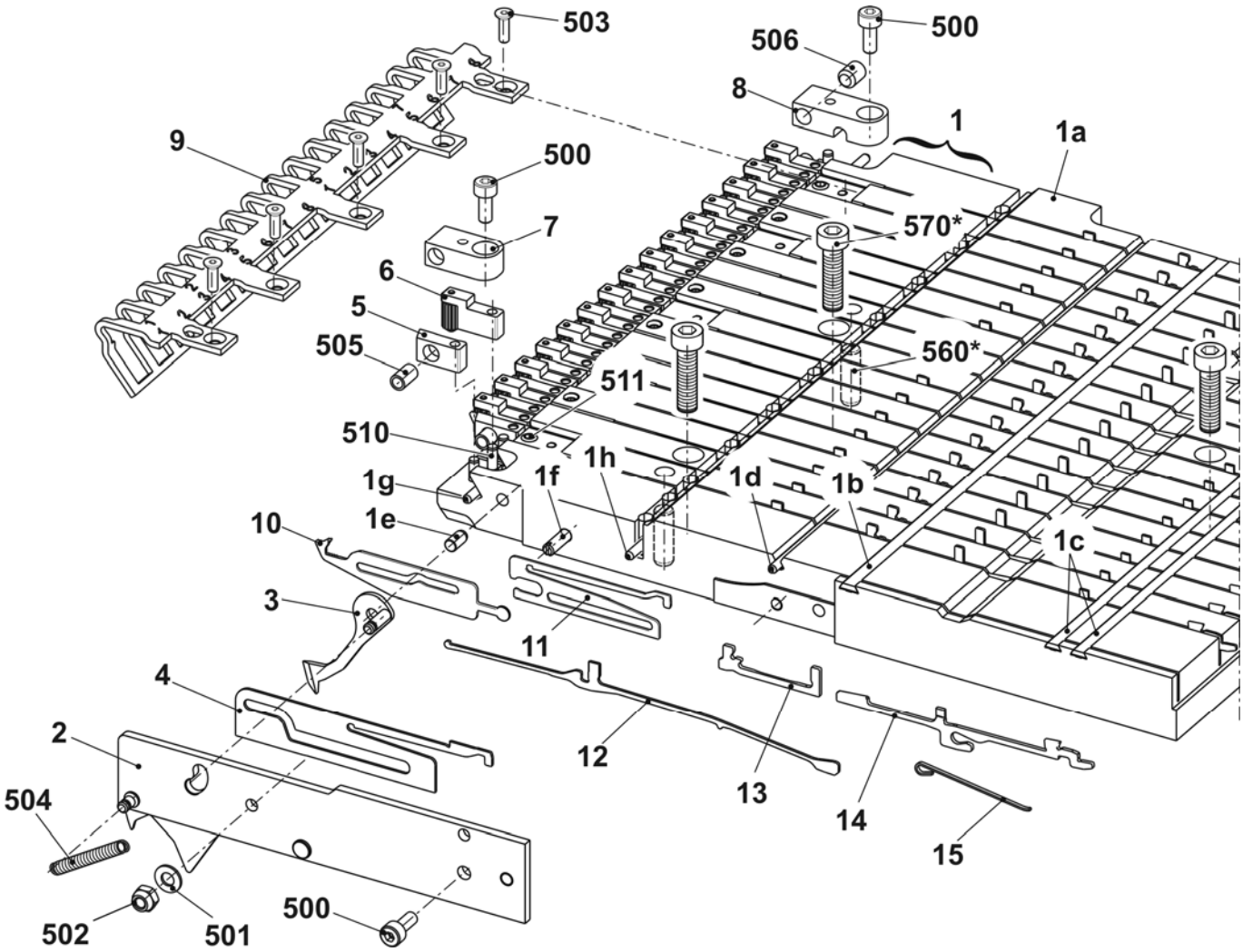

Yarn brake on the left and right

Pos	Designation	Ident No		Pos	Designation	Ident No
Σ L	**Yarn brake on the left**	**245 031**		**Σ R**	**Yarn brake on the right**	**245 032**
1	Cover on the left	240 020		1	Cover on the left	240 022
2	Clamping part	245 030		2	Clamping part	245 030
3	Leaf spring	232 164		3	Leaf spring	232 164
500	Cap screw M4x8	022 501		500	Cap screw M4x8	022 501

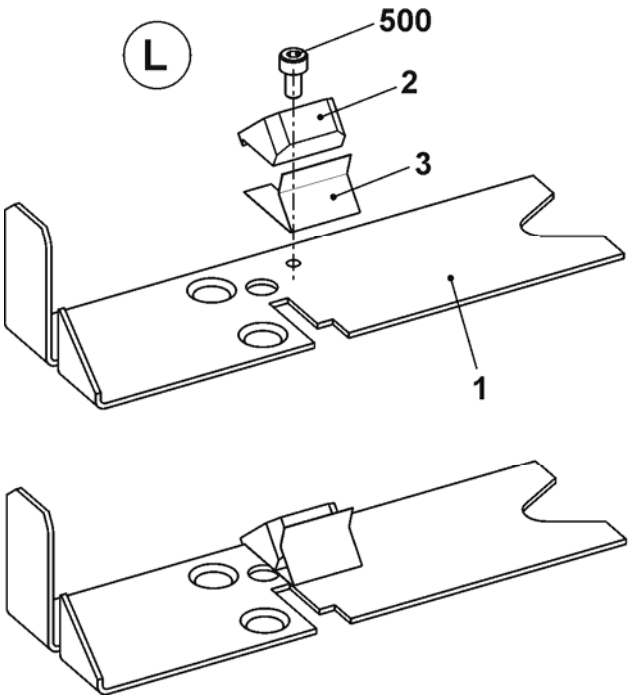

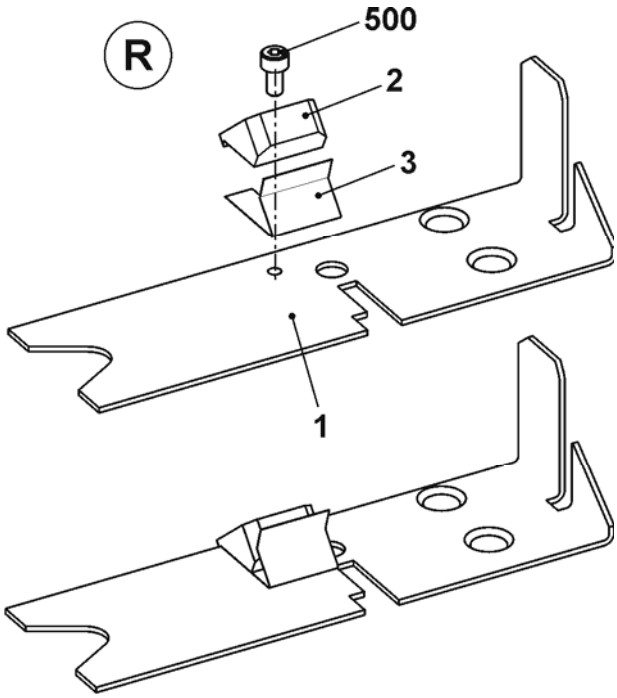

Additional board

Pos	Designation	Ident No		Pos	Designation	Ident No
Σ	**Additional board 7XX/8XX**	**241 928**				
1	Additional board welded	241 927		4	Bobbin support	200 363
2	Positioning pin	202 777		500	Countersunk screw M4x30	023 681
3	Disc D=130	062 385		501	Washer 5.3x30x1.25	023 556

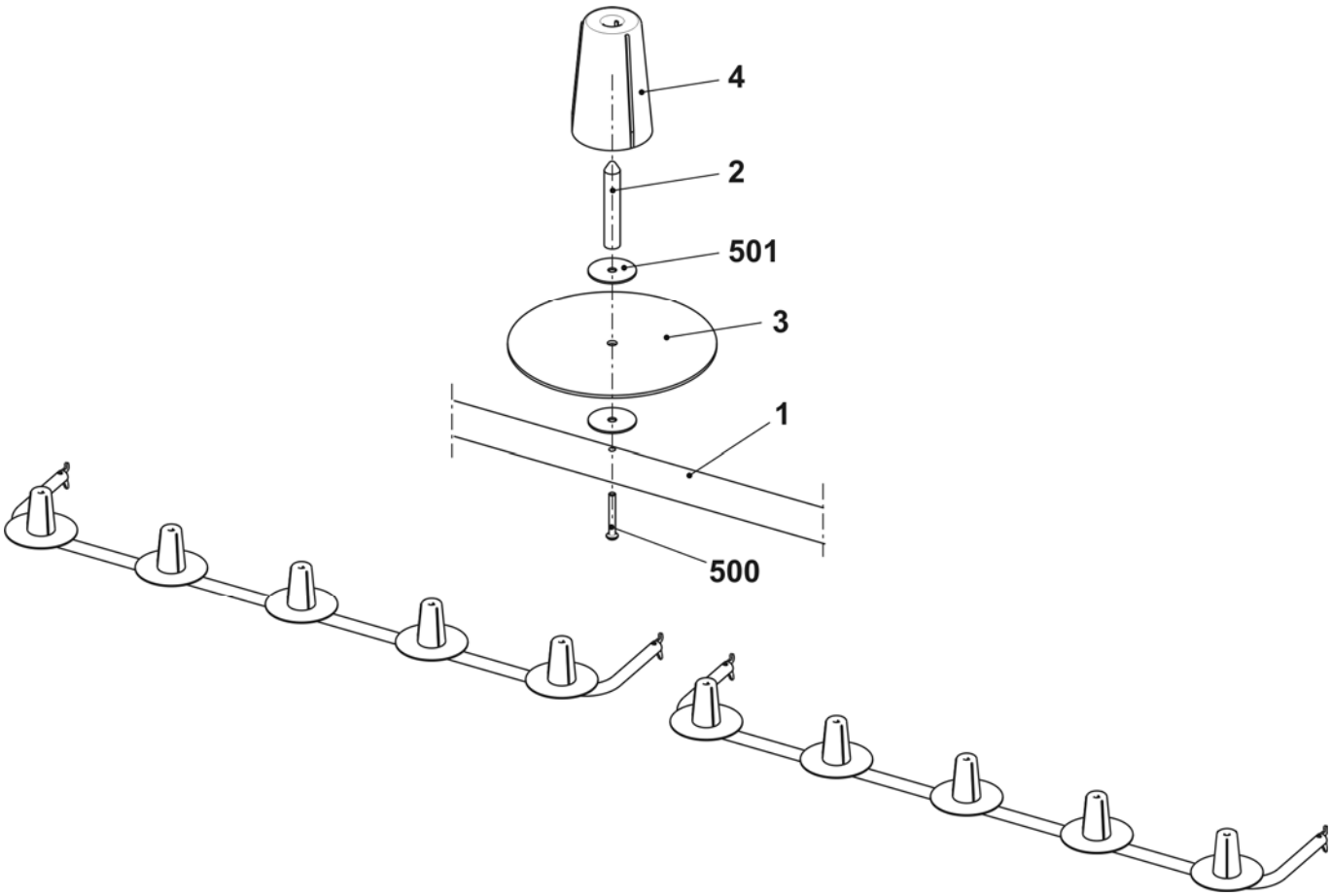

Adjusting part

Pos	Designation	Ident No		Pos	Designation	Ident No
	Adjusting part	**250 119**				

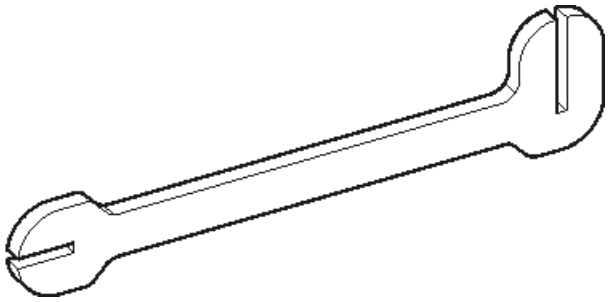

Yarn guide complete E5 IYC

Pos	Designation		Ident No	Pos	Designation		Ident No
Σ	**Yarn guide complete E5 IYC (E2,5.2/3,5.2/5.2)**		**245 161**				
1	Intarsia YC carriage complete 1+8 E5		250 319	4	Intarsia YC carriage complete 4+5 E5		250 322
	1a	Intarsia YC carriage 1+8	250 315		4a	Intarsia YC carriage 4+5	250 318
	1b	Yarn carrier head 1+8 complete E5	244 076		4b	Yarn carrier head 3-6 complete E5	244 078
2	Intarsia YC carriage complete 2+7 E5		250 320	5	Limiter on the left with 2 eyelets		244 446
	2a	IYC carriage 2+7	250 316	6	Limiter on the right with two eyelets		244 445
	2b	Yarn carrier head 2+7 complete E5	244 077	C	Yarn guide angle		242 863
3	Intarsia YC carriage complete 3+6 E5		250 321	500	Countersunk screw M4x5		239 549
	3a	Intarsia YC carriage 3+6	250 317	501	Washer 4		020 870
	3b	Yarn carrier head 3-6 complete E5	244 078				

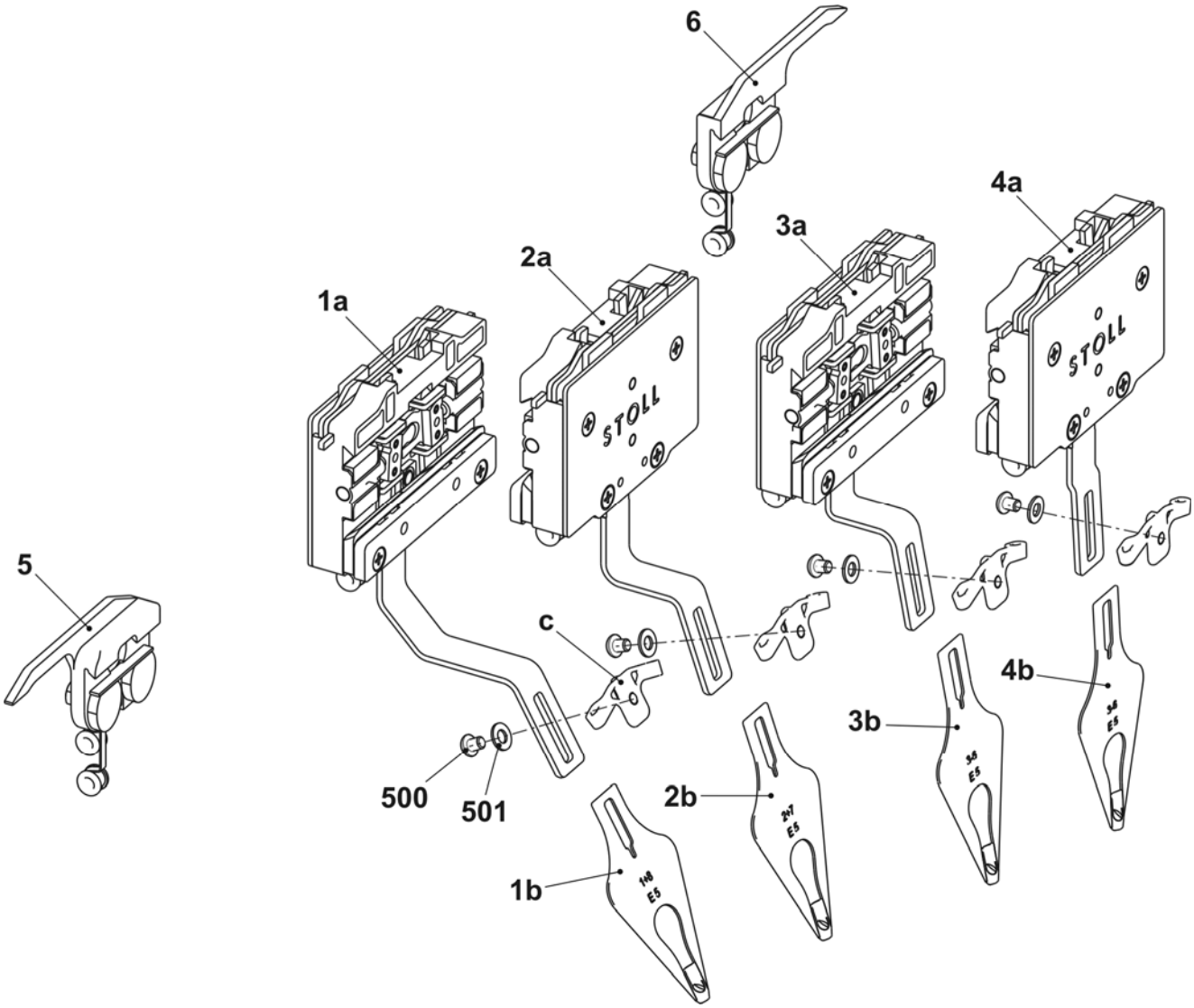

Yarn guide complete E7-8 IYC

Pos	Designation		Ident No	Pos	Designation		Ident No
Σ	**Yarn guide complete E7-8 IYC (E6.2)**		**245 162**				
1	Intarsia YC carriage complete 1+8 E7-8		250 323	4	Intarsia YC carriage complete 4+5 E7-8		250 326
	1a	Intarsia YC carriage 1+8	250 315		4a	Intarsia YC carriage 4+5	250 318
	1b	Yarn carrier head 1+8 complete E7-8	244 082		4b	Yarn carrier head 3-6 complete E7-8	244 084
2	Intarsia YC carriage complete 2+7 E7-8		250 324	5	Limiter on the left with 2 eyelets		244 446
	2a	IYC carriage 2+7	250 316	6	Limiter on the right with two eyelets		244 445
	2b	Yarn carrier head 2+7 complete E7-8	244 083	C	Yarn guide angle		242 863
3	Intarsia YC carriage complete 3+6 E7-8		250 325	500	Countersunk screw M4x5		239 549
	3a	Intarsia YC carriage 3+6	250 317	501	Washer 4		020 870
	3b	Yarn carrier head 3-6 complete E7-8	244 084				

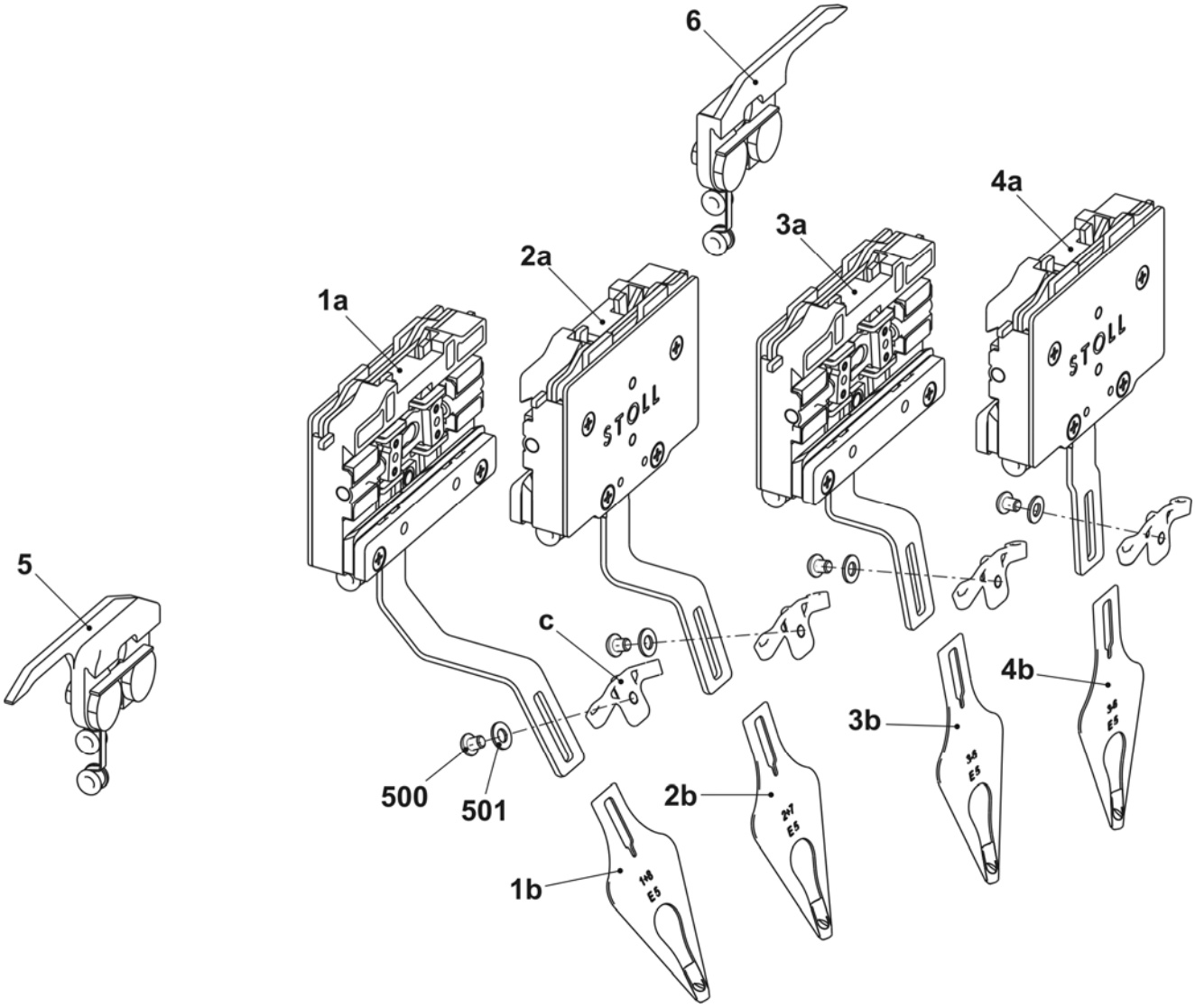

Yarn guide complete E10-14 IYC

Pos	*Designation*		*Ident No*	*Pos*	*Designation*		*Ident No*
Σ	**Yarn guide complete E10-14 IYC (E7.2)**		**245 163**				
1	Intarsia YC carriage complete 1+8 E10-14		250 327	4	Intarsia YC carriage complete 4+5 E10-14		250 330
	1a	Intarsia YC carriage 1+8	250 315		4a	Intarsia YC carriage E10-14	250 318
	1b	Yarn carrier head 1+8 complete E10-14	250 008		4b	Yarn carrier head 3-6 complete E10-14	250 010
2	Intarsia YC carriage complete 2+7 E10-14		250 328	5	Limiter on the left with 2 eyelets		244 446
	2a	IYC carriage 2+7	250 316	6	Limiter on the right with two eyelets		244 445
	2b	Yarn carrier head 2+7 complete E10-14	250 009	C	Yarn guide angle		242 863
3	Intarsia YC carriage complete 3+6 E10-14		250 329	500	Countersunk screw M4x5		239 549
	3a	Intarsia YC carriage 3+6	250 317	501	Washer 4		020 870
	3b	Yarn carrier head 3-6 complete E10-14	250 010				

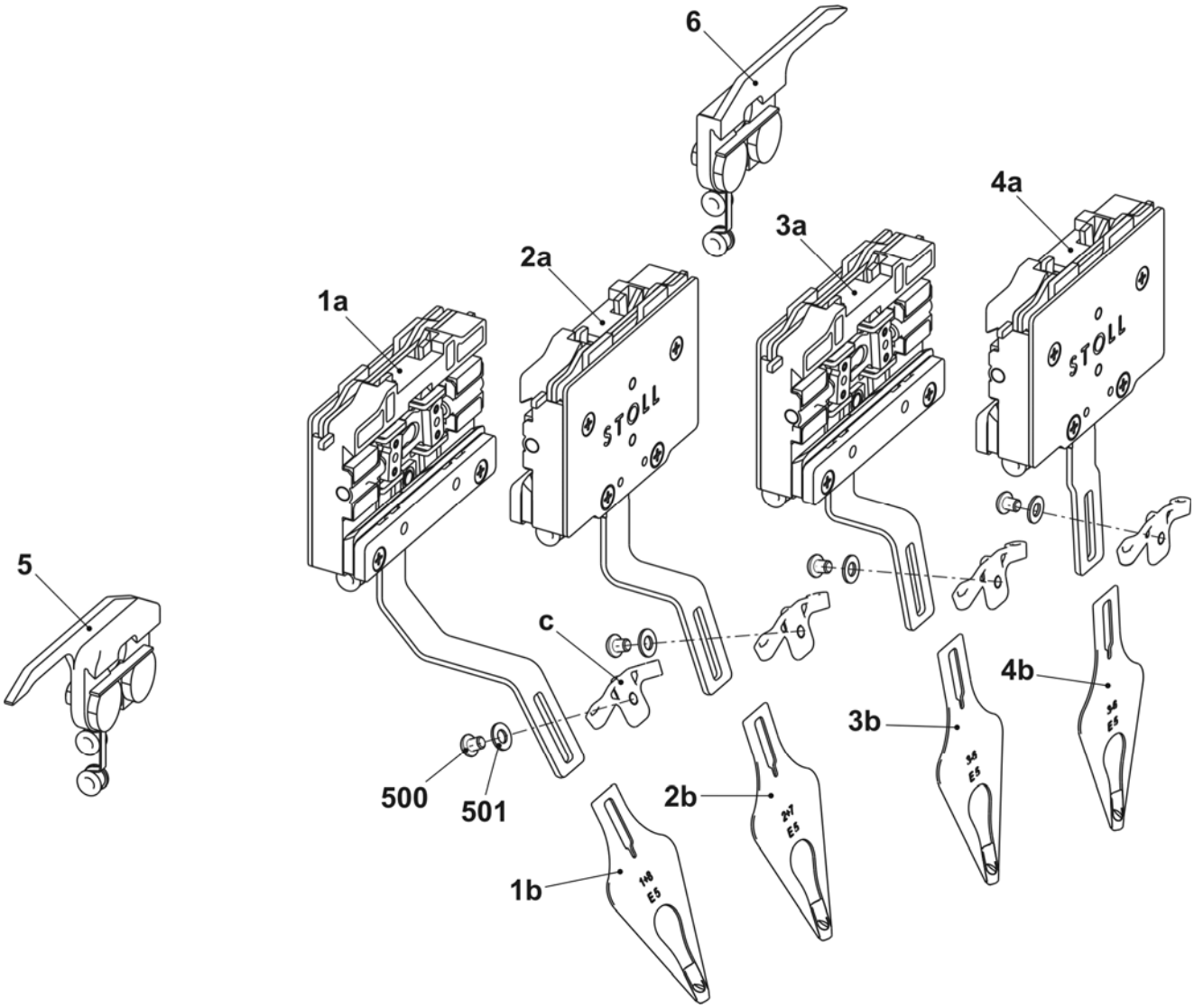

Yarn guide complete E16-18 IYC
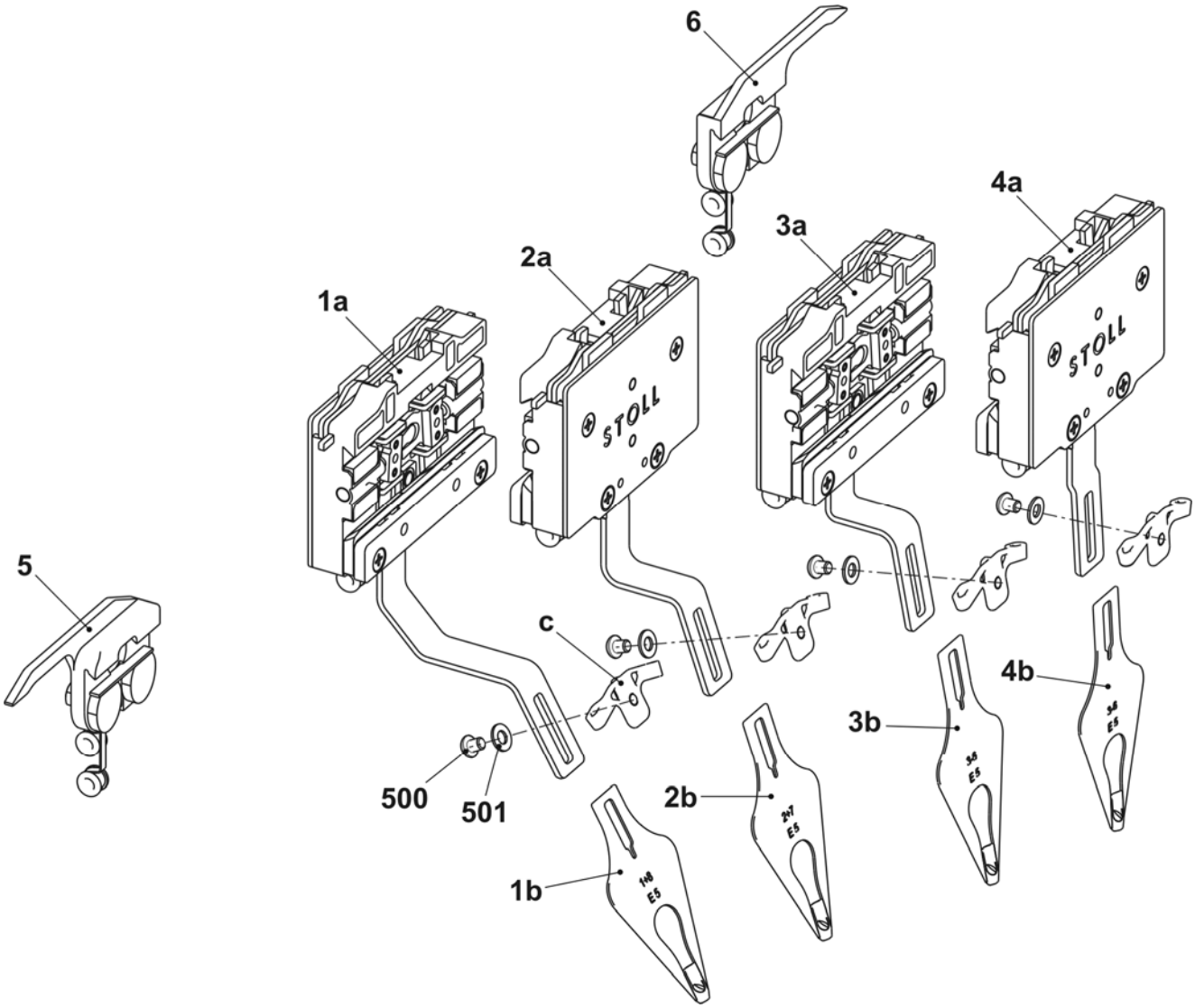
Pos	Designation		Ident No	Pos	Designation		Ident No
Σ	**Yarn guide complete E16-18 IYC (E8.2)**		**245 164**				
1	Intarsia YC carriage complete 1+8 E16-18		250 331	4	Intarsia YC carriage complete 4+5 E16-18		250 334
	1a	Intarsia YC carriage 1+8	250 315		4a	Intarsia YC carriage E10-14	250 318
	1b	Yarn carrier head 1+8 complete E16-18	250 011		4b	Yarn carrier head 3-6 complete E16-18	250 013
2	Intarsia YC carriage complete 2+7 E16-18		250 332	5	Limiter on the left with 2 eyelets		244 446
	2a	IYC carriage 2+7	250 316	6	Limiter on the right with two eyelets		244 445
	2b	Yarn carrier head 2+7 complete E16-18	250 012	c	Yarn guide angle		242 863
3	Intarsia YC carriage complete 3+6 E16-18		250 333	500	Countersunk screw M4x5		239 549
	3a	Intarsia YC carriage 3+6	250 317	501	Washer 4		020 870
	3b	Yarn carrier head 3-6 complete E16-18	250 013