STOLL

THE RIGHT WAY TO KNIT

Spare Parts Catalog

CMS 822 (Type 574)

Component Type 004

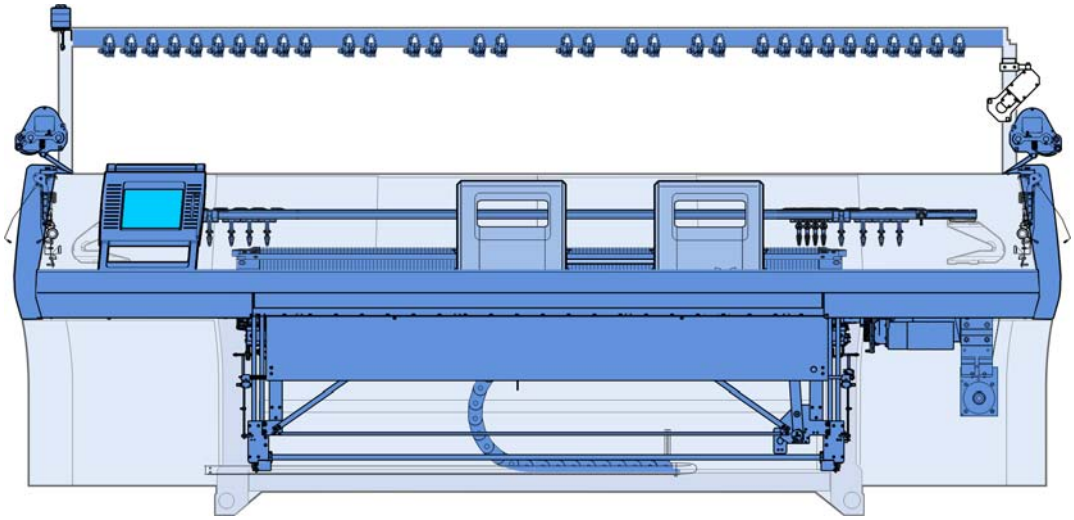

Document-No. 243960_10_gb

Issue 11/2008

Impressum

All rights reserved.
The utilisation of texts and pictures, also in extracts, without our agreement is unfavourable to the copyright.
Our products are being developed further continuously. They are therefore subject to technical modifications.
The indications of this catalog are without liability.

©

H. Stoll GmbH & Co.KG

Stollweg 1

D-72760 Reutlingen, Germany

Phone: +49 (07121) 313-289

Fax: +49 (07121) 313-347

e-mail: spareparts@stoll.com

Introduction

Notes for the order

This catalog serves to order spare parts.
It applys only to the machine type recorded on the title page.

With orders of spare parts we earnestly request the following details, as otherwise a satisfactory delivery of parts is not possible:

1. Type of machine, gauge, no. of machine.
2. Page no., designation, id, quantity.

Please use the order form!
Use original spare parts from Stoll for repairing only.

STOLL
THE RIGHT WAY TO KNIT

Order form

Telefon +49 (7121) 313-289
Telefax +49 (7121) 313-347
email: spareparts@stoll.com

H. Stoll GmbH & Co. KG
PO box 2544

D-72715 Reutlingen

Order number

Receipt date

Company

Name

Street

Postal code town

Phone

Fax

Customer no.

Shipping mode

Date of order

Maschine type

Gauge

Masch.-Nr.

Sirix-Nr.

Spare parts order

Page no.	Designation	Ident no.	Piece no.	Comment

Date Signature

Search help

In order to make the search of the spare parts easier, the following elements will be used in the spare parts catalog:

Symbol	Meaning
Σ	Indicates an assembly
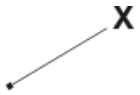	Position indicator with the position number (X).
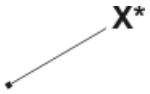	Indicates an element of another assembly.
	Indicates an assembly which is represented more detailed beside.
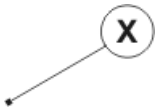	Indicates an assembly which is represented on another page more detailed.
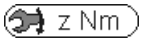	Screw torques (z) deviating from the preferential row.
	Detail, represented enlarged in the direction of the arrow.
	Explosion representation, single elements enlarged.
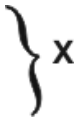	Indicates a group of parts.
	Indicates the left side or view.
	Indicates the right side or view.
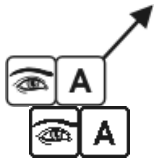	Indicates a section or a view in the viewing direction.

Torques

Drehmomente **Torques** **Couples** **Coppias** **Momentos de rotación**		Festigkeitsklassen Property class Classes de résistance Classi di resistenza Clasas de resistencia		
[Nm] ± 10 % (für μ_{ges} = 0,12)		4,8	8,8	12,9
Regelgewinde Coarse-pitch thread Filetage à pas gros Filetto regolatore Filete regolador	M3	**0,6**	**1,2**	**2,5**
	M4	**1,2**	**2,5**	**5**
	M5	**2,5**	**5**	**9**
	M6	**5**	**9**	**18**
	M8		**18**	**40**
	M10		**40**	
	M12		**80**	

Preferential row of screw torques

- Torques are valid for:
  Connection steel-steel, black, phosphatized, galvanized, rolled or cut thread as well as only for plain (head) supports.
- Torques are not valid for:
  protected screws with: Lock washers, rib heads, coated and clamping screws and nuts. They are also not used for self-grooving threads.
- Torques differing from this preferential row of torques must be taken from the corresponding location in the drawings.

Table of contents

Impressum 2

Introduction 3

Search help 5

Torques 6

Carriage drive 15

Drive 16

Motor and belt drive 17

Tension bearing 18

Energy chain and carriage driver 19

Racking 20

Racking drive 21

Needle beds 22

Needle bed E5 23

Continuation needle bed E5 24

Needle bed E7 25

Continuation needle bed E7 26

Needle bed E8 27

Continuation needle bed E8 28

Needle bed E10 29

Continuation needle bed E10 30

Needle bed E12 31

Continuation needle bed E12 32

Needle bed E14 33

Continuation needle bed E14 34

Needle bed E16 35

Continuation needle bed E16 36

Needle bed E18 37

Continuation needle bed E18 ... 38

Needle bed E5m.4 ... 39

Continuation needle bed E5m.4 ... 40

Needle bed E7m.5 ... 41

Continuation needle bed E7m.5 ... 42

Needle bed E7m.8 ... 43

Continuation needle bed E7m.8 ... 44

Needle bed E8m.7 ... 45

Continuation needle bed E8m.7 ... 46

Needle bed E10m.12 ... 47

Continuation needle bed E10m.12 ... 48

Needle bed E6.2 (12m.10) ... 49

Continuation needle bed E6.2(12m.10) ... 50

Needle bed E2,5.2 k&w ... 51

Continuation needle bed E2,5.2 k&w ... 52

Needle bed E3,5.2 k&w ... 53

Continuation needle bed E3,5.2 k&w ... 54

Needle bed E5.2 k&w ... 55

Continuation needle bed E5.2 k&w ... 56

Needle bed E6.2 k&w ... 57

Continuation needle bed E6.2 k&w ... 58

Needle bed E7.2 k&w ... 59

Continuation needle bed E7.2 k&w ... 60

Needle bed E2,5.2 mg ... 61

Continuation needle bed E2,5.2 mg ... 62

Needle bed E3,5.2 mg ... 63

Continuation needle bed E3,5.2 mg ... 64

Needle bed E5.2 mg ... 65

Continuation needle bed E5.2 mg ... 66

Needle bed E6.2 mg ... 67

Continuation needle bed E6.2 mg ... 68

Needle bed E7.2 mg 69

Continuation needle bed E7.2 mg 70

Needle bed E8.2 mg 71

Continuation needle bed E8.2 mg 72

Left clamping/cutting bed E5 - E8 + E2,5.2 + E3,5.2 + E5.2 + E5m.4 + E7m.5 + E7m.8 + E8m.7 73

Left clamping/cutting bed E10 + E12 + E14 + E6.2 + E7.2 + E6.2(E12m.10) + E10m.12 74

Left clamping/cutting bed E16 + E18 + E8.2mg 75

Right clamping/cutting bed E5 + E7 + E8 + E2,5.2 + E3,5.2 + E5.2 + E5m.4 + E7m.5 + E7m.8 + E8m.7 76

Right clamping/cutting bed E10 + E12 + E14 + E6.2 + E7.2 + E6.2(E12m.10) + E10m.12 77

Right clamping/cutting bed E16 + E18 + E8.2mg 78

Cover on the left and on the right 79

Connection measuring bar 80

Tandem carriage 81

Overview of carriage 82

Carriage assembly 83
Carriage coupling 84
Brush holder 85
Yarn carrier driving without guiding part 86
Yarn carrier driving with guiding part 87
Holding-down jack control 88
Jack cam box E5 + E5m.4 + E2,5.2 + E3,5.2kw 89
Jack cam box E7 + E8 + E7m.5 + E7m.8 + E8m.7 + E3,5.2mg + E5.2mg 90
Jack cam box E10 + E10m.12 91
Jack cam box E12 + E14 + E6.2(E12m.10) + E6.2mg 92
Jack cam box E16 + E18 + E8.2mg 93
Jack cam box E5.2kw + E6.2kw 94
Jack cam box E7.2kw 95
Jack cam box E7.2mg 96
Support co. 97
Control unit holding-down jacks 98
Needle detector 99
Cam box E5 + E5m.4 + E7m.5 + E2,5.2 + E3,5.2kw + E5.2 100

Cams E5 + E5m.4 + E7m.5 + E2,5.2 + E3,5.2kw + E5.2 101
Cams for narrow coupling E5 + E7 + E8 + E5m.4 + E7m.5 + E7m.8 +
E8m.7 + E2,5.2 + E3,5.2 + E5.2 102
Cam box E7 + E8 + E7m.8 + E8m.7 103
Cams E7 + E8 + E7m.8 + E8m.7 104
Cam box E10 105
Cams E10 106
Cams for narrow coupling E10 + E12 + E14 + E16 + E18 + E10m.12 +
E6.2(12m.10) +E6.2mg + E7.2mg + E8.2mg 107
Cam box E12 108
Cams E12 109
Cam box E14 110
Cams E14 111
Cam box E16 + E18 112
Cams E16 + E18 113
Cam box E10m.12 114
Cams E10m.12 115
Cam box E6.2kw 116
Cams E6.2kw + E7.2kw 117
Cams for narrow coupling E6.2kw + E7.2kw 118
Cam box E6.2mg 119
Cams E6.2mg 120
Cam box E6.2 (12m.10) 121
Cams E6.2 (12m.10) 122
Cam box E7.2kw 123
Cam box E7.2mg 124
Cams E7.2mg 125
Cam box E8.2mg 126
Cams E8.2mg 127

Spare parts package carriage guide bar 128

Main take-down 129

Main take-down 130

Main take-down left 131

Main take-down right 132

Mounting plate 133
Floating axle 134

Main take-down in the middle 135

Stripper angle 136

Impulse giver and motor 137
Rear take-down roller 138
Front take-down roller 139
Front roller elements 140
Pressure angle rail 141
Take-down closing device 142
Continuation take-down closing device 143
Right swivel support 144
Swivel holder in the middle 145
Left swivel holder 146

Auxiliary take-down 147

Auxiliary take-down 148
Auxiliary take-down pre-assembled 149
Contact lever 150
Take-down roller 151
Left bearing of the auxiliary take-down 152
Right bearing of the auxiliary take-down 153
Motor 154

Comb take-down 155

Comb take-down 156
Comb take-down left 157
Comb take-down right 158
Drive shaft of comb 159
Swivel lever comb take-down 160
Comb take-down in the middle 161
Comb unit 162
Motor take-down unit 164

Yarn delivery device 165

Yarn guide system from 20 up to 26 FKE 166
Yarn guide system with 32 FKE 167
Yarn control unit 168
Left yarn guide 169
Left yarn tensioner 170
Yarn brake and yarn deflector 171
Left tension axle 172

Right yarn guide ... 173

Right yarn tensioner ... 174

Right tension axle ... 175

Bobbin board ... 176

Yarn carrier and guide rails ... 177

Co. yarn carriers ... 178

Left friction feed wheel ... 179

Right friction feed wheel ... 180

Fluff absorption ... 181

Fluff absorption ... 182

Lint container ... 183

Set of tubes on the left and right ... 184

Operation and control ... 185

Input unit ... 186

Starting unit ... 187

Bearing of the engaging rod ... 188

Signal light ... 189

Collecting area - control ... 190

Shock stop motion E5-14 ... 191

Shock stop motion E16-18 ... 192

Measuring device ... 193

Protective units ... 194

Lateral safety covers ... 195

Panelling ... 196

Rear panel ... 197

Electrical equipment ... 198

Fuses ... 199

Circuit diagram (219) as PDF ... 200

Trailing cable ... 201

Cable ... 202

Continuation I of cable 203

Continuation II of cable 204

Control electronics 205

Left control cabinet 206

Right control cabinet 207

Deliverable accessories 208

Fuses 209

Tool 210

Lubricating stuff 211

Mechanical parts 212

Special equipment 213

Co. intarsia yarn carriers 214

Carriage IYC 215

Bow and head IYC 216

Plating yarn carrier 3+6 217

Plating yarn carrier 4+5 218

Carriage of plating yarn carrier (46mm) 219

Carriage of plating yarn carrier (adjustable) 220

STIXX device 221

Feed wheel SFE 222

Bobbin holder on the left 223

Bobbin holder on the right 224

Additional board at the bottom 225

Conversion kit 32 IYC type 2 226

Overview of conversion kit E5 + E2,5.2 + E5.2 227

Overview of conversion kit E7 + E8 + E10 + E12 + E14 + E16 + E18 + E6.2 + E7.2 + E8.2 228

Magnetic support 229

Parts for the left safety cover 230

Parts for the right safety cover 231

Parts for the yarn guide system 232

Driving in the middle 233

Driving outside 234

Friction feed wheel on the left and on the right co. 235

Friction feed wheel on the left 236

Friction feed wheel on the right 237

Thread deflector on the left 238

Yarn deflector on the right 239

Left clamping/cutting bed E5 + E7 + E8 + E2,5.2 + E3,5.2 + E5.2 + E6.2 240

Left clamping/cutting bed E10 + E12 + E14 + E7.2 + E8.2 241

Left clamping/cutting bed E16 + E18 + E9.2 242

Right clamping/cutting bed E5 + E7 + E8 + E2,5.2 + E3,5.2 + E5.2 + E6.2 243

Right clamping/cutting bed E10 + E12 + E14 + E7.2 + E8.2 244

Right clamping/cutting bed E16 + E18 + E9.2 245

Yarn brake on the left and right 246

Additional board 247

Yarn guide co. E5 IYC 248

Yarn guide co. E7-8 IYC 249

Yarn guide co. E10-14 IYC 250

Yarn guide co. E16-18 IYC 251

Carriage drive

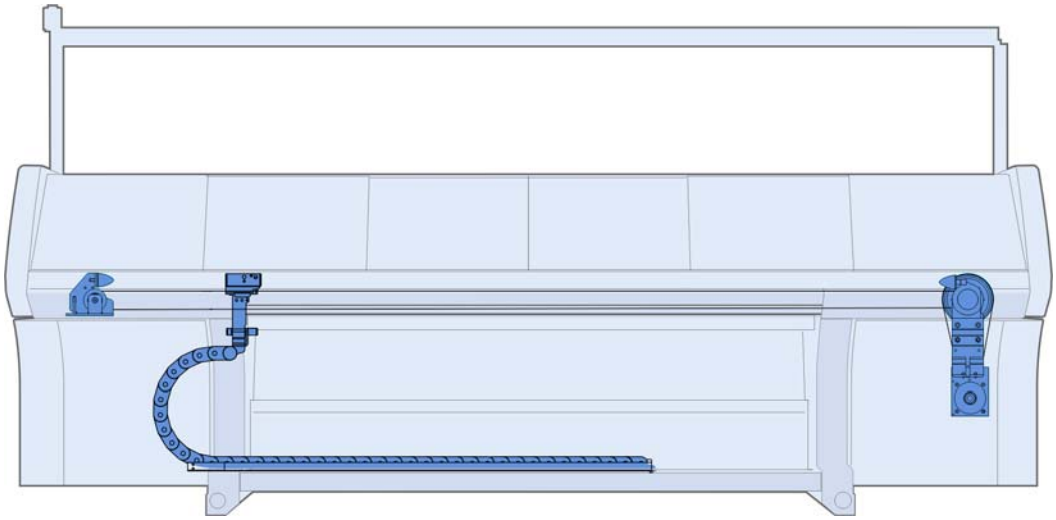

Drive

Pos	Designation	ID	Pos	Designation	ID
Σ	**Drive unit**		23	Ventilator co.	242 413
11	Drive unit co.	240 743		23a Ventilator plate drive motor	241 823
12	Tension bearing co.	251 581		23b Ventilator co. 512	213 722
14	Toothed belt 50AT10/7150	236 656	523	Cap screw M8X12	023 138
17	Parabolic spring	200 661	905	Slide nut M10X12	023 471
18	Hexagon bolt	214 275	907	Cap screw M10x25	020 157

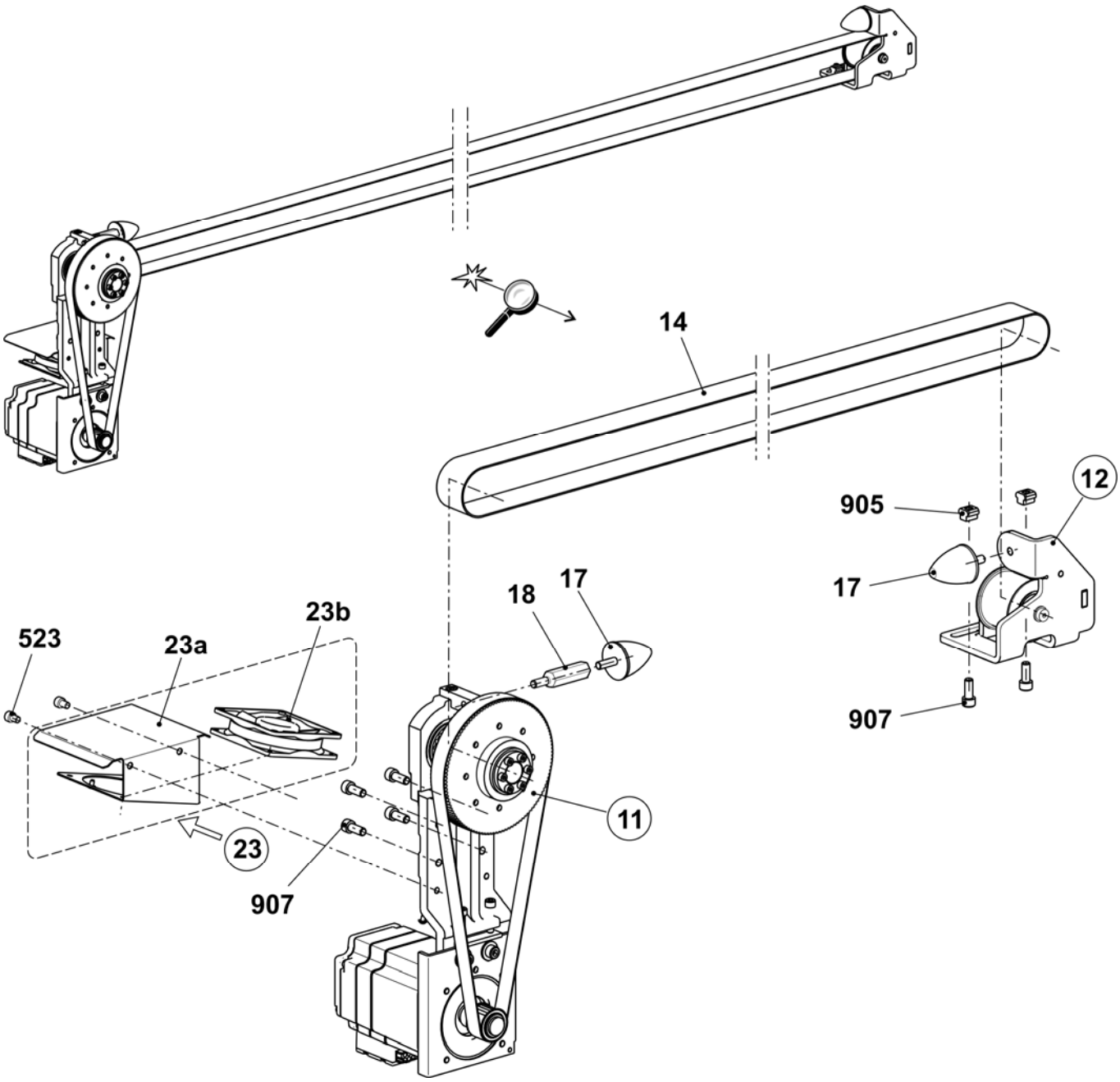

Motor and belt drive

Pos	*Designation*		*ID*
Σ	**Drive unit co.**		**240 743**
1	Drive unit		240 741
	1a	Drive motor co.	240 740
	1b	Motor plate	227 662
	510	Cap screw M8X16	023 629
500	Cap screw M10x25		020 157
501	Disc 10.5X25X2.5		022 178

Pos	*Designation*		*ID*
2	Drive bearing co.		240 742
	2a	Drive bearing	241 654
	2b	Timing belt pulley	240 616
	2c	Pinion 57 AT10 18	242 039
	2d	Support buffer	222 100
	2e	Toothed belt 250 HP-S5M 1050 NG	240 628
	520	Cap screw M8X35	020 144
	521	Locking ring 68x2.5	022 914
	522	Ball bearing 6207-2RS	022 915
	523	Tension set 30X55	023 208
	524	Cap screw M8X25 12.9	020 142

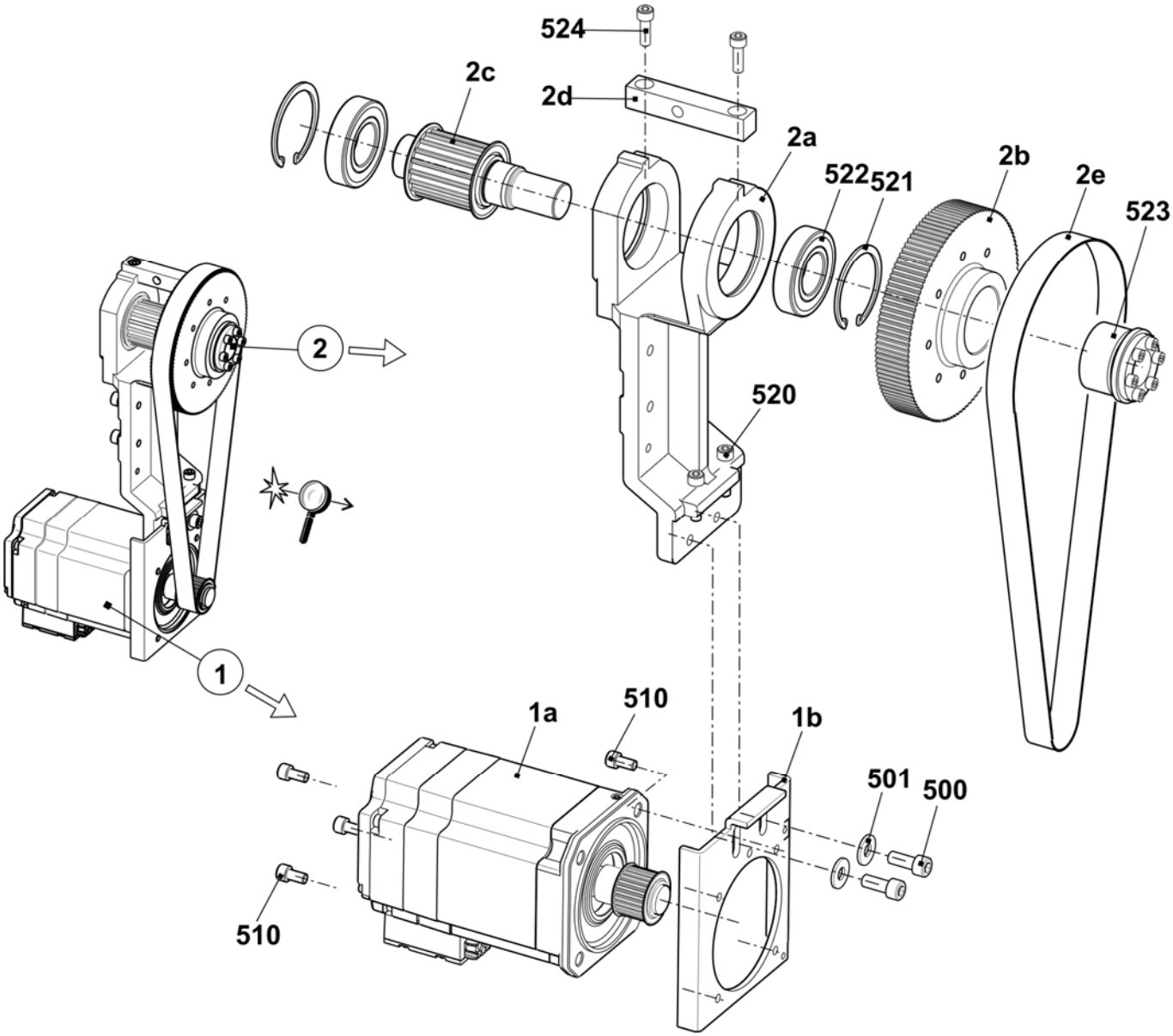

Tension bearing

Pos	Designation	ID		Pos	Designation	ID
Σ	**Tension bearing co.**	**251 581**		500	Ball bearing 6205-2RS	023 559
1	Tension bearing	251 560		501	Cap screw M10x25	023 751
2	Axle	251 579		502	U-washer	020 874
3	Tension roller	251 580		504	Locking ring 25x1.2	251 617

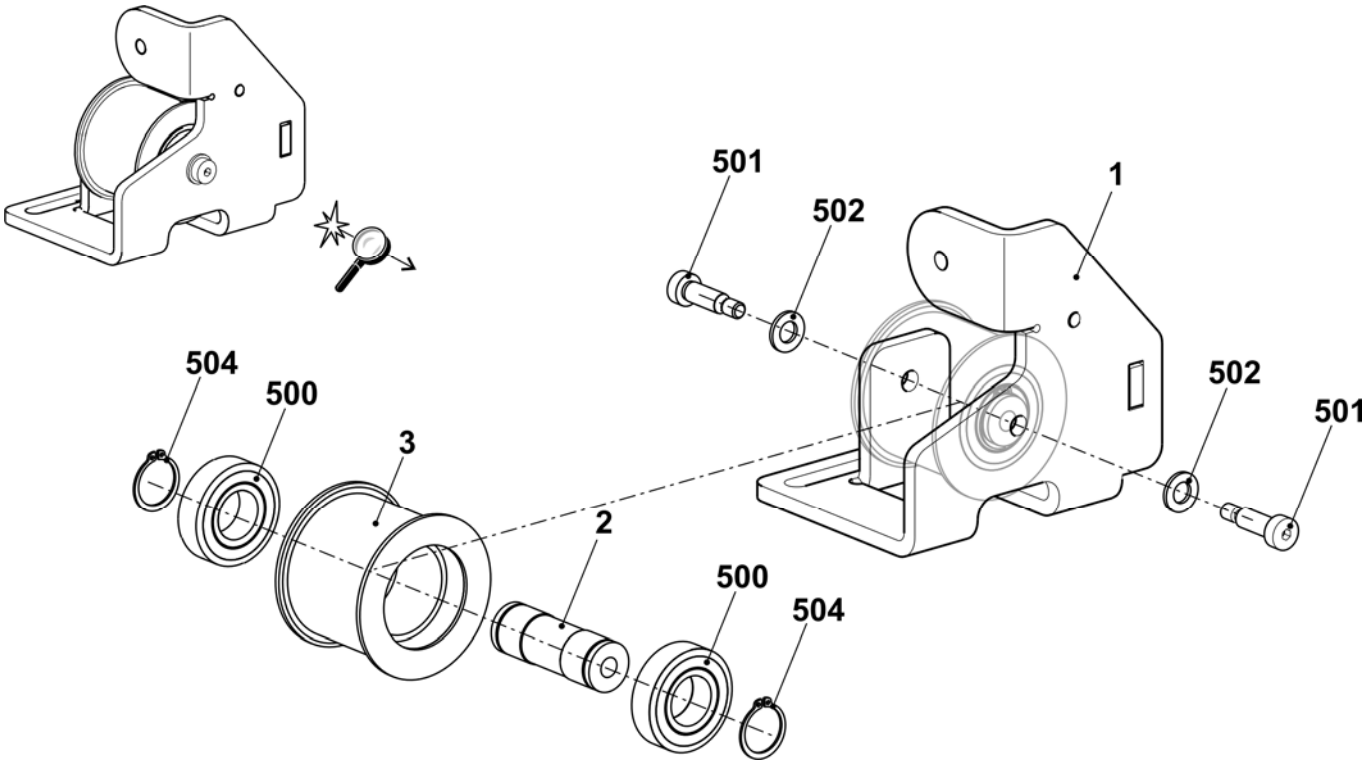

Energy chain and carriage driver

Pos	Designation		ID	Pos	Designation		ID
1	Energy chain 41 links		236 927	5	Continuation carriage driver co.		
4	Spacer		214 584		550	Cap screw M8x20-8.8	023 621
501	Cap screw M6x8		023 411		551	Circlip S6	022 752
502	Cap screw M6x12		020 134		552	Cap screw M8X30	020 143
503	Cap screw M6x16		020 135		553	Cap screw M6x16	020 135
5	Carriage driver co.		242 803		554	Cap screw M6x12	020 134
	51	Carriage driver 2 cam box	242 255		555	Countersunk screw M5x6	023 284
	52	Cable driver	251 262		556	Fixing element	026 489
	53	Clamping plate	226 111	6	Stop point co.		242 776
	54	Cover strip	230 698		61	Stop point	242 528
	55	Cable holder	204 688		62	Cable holder	244 330
	56	Cellular caoutchouc black	202 597		554	Cap screw M6x12	020 134
	57	Retaining plate	226 129				

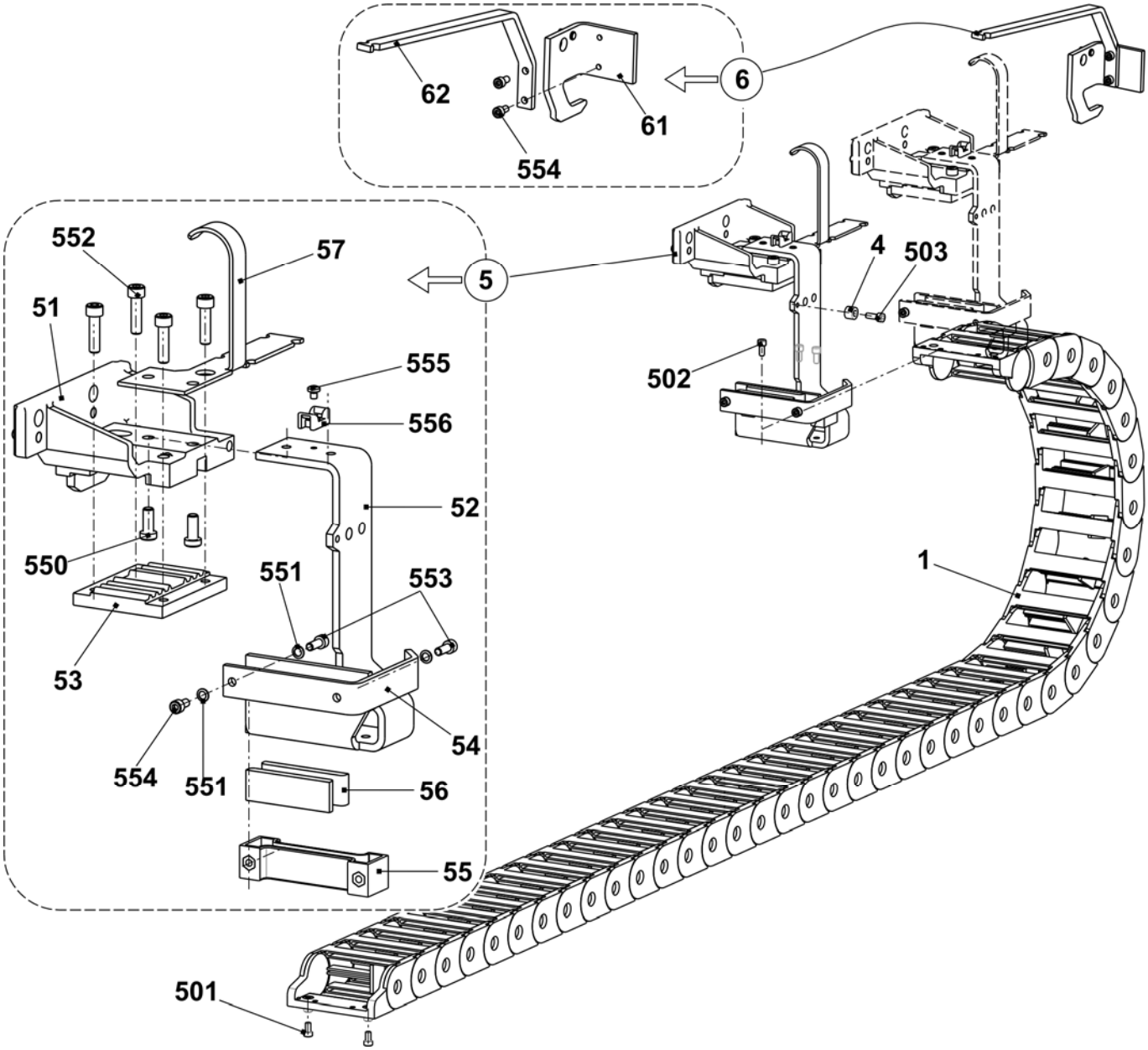

Racking

Racking drive

Pos	Designation	ID		Pos	Designation	ID
Σ	**Racking**					
1	Racking motor co.	241 454		504	Cap screw M5x12	020 132
2	Bearing	227 605		505	U-washer	022 175
3	Spindle bearing co.	253 262		507	Shim 0.03x11x80	023 286
4	Card racking limit switch	229 396		508	Shim 0.05x11x80	023 287
5	Racking cover plate	230 048		509	Shim 0.03x15x85	023 162
6	Racking strip	241 921		510	Shim 0.05x15x85	023 163
7	Racking strip on the left	240 696		511	Shim 0.1x15x85	023 164
8	Guide strip	206 382		512	Shim 0.2x15x85	023 170
9	Toothed belt 150 S 5M 490	229 281		518	Shim 0.03x15x75	023 395
13	Switching metal plate	240 722		519	Shim 0.05x15x75	023 396
19	Stop screw	221 386		520	Shim 0.1x15x75	023 397
20	Cover plate	232 544		521	Shim 0.2x15x75	023 398
21	Distance bolt	232 543		900	Cap screw M6x12	022 795
500	Cap screw M4x4	022 767		901	Countersunk screw M6x10	023 183
501	Cap screw M6x16	023 116		902	Cap screw M8X30	020 143
503	Countersunk screw M6x10	023 183		903	Cap screw M8X25	020 142

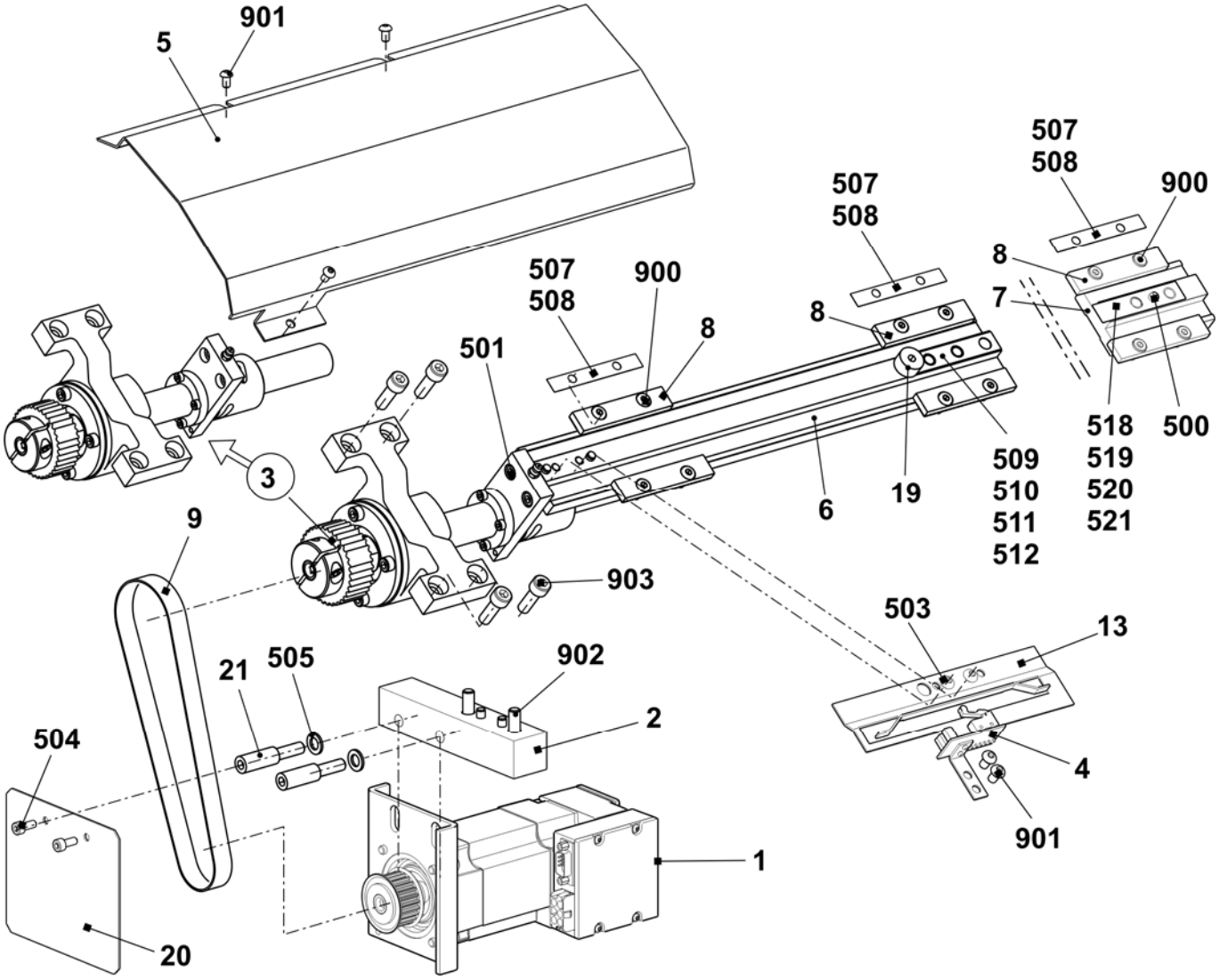

Needle beds

Needle bed E5

Pos	Designation	ID	Pos	Designation	ID
Σ	**Needle bed co. at the front and rear E5**	**238 217**	16	Needle rail on the left	205 311
2	Spring steel wire E4-5 Ø1.0	237 406	17	Needle rail on the right	205 312
3	Spring steel wire Ø2.0	223 854	18	Needle rail in the middle	237 387
4a	Needle E5-E6 with round hook	205 396	503	Cap screw M5x8-8.8	023 154
4b	Coupling part E4-E8	200 682	505	Cap screw M5x8	023 379
6	Intermediate slider with brake E5-E8	237 323	506	Set screw M6x12-45	022 400
7a	Selection jack E4-E8	200 687	507	Sprung thrust piece B-M10	023 177
7b	Selector spring E4-E8	200 690	509	Shim 0.02x18.5x34	023 194
10	Knock-over bit E5	204 996	510	Shim 0.03x18.5x34	023 195
11	Holding-down jack E5	205 031	511	Shim 0.05x18.5x34	023 196
12	Fixed wire Ø2.8	223 862	512	Shim 0.1x18.5x34	023 197
13	Support	206 352	513	Shim 0.2x18.5x34	023 253

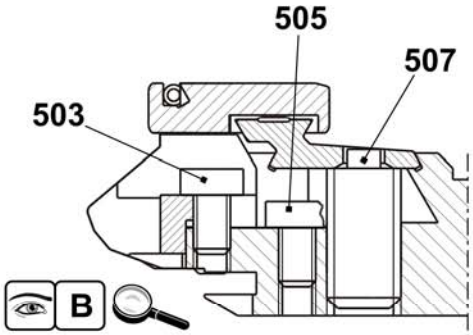

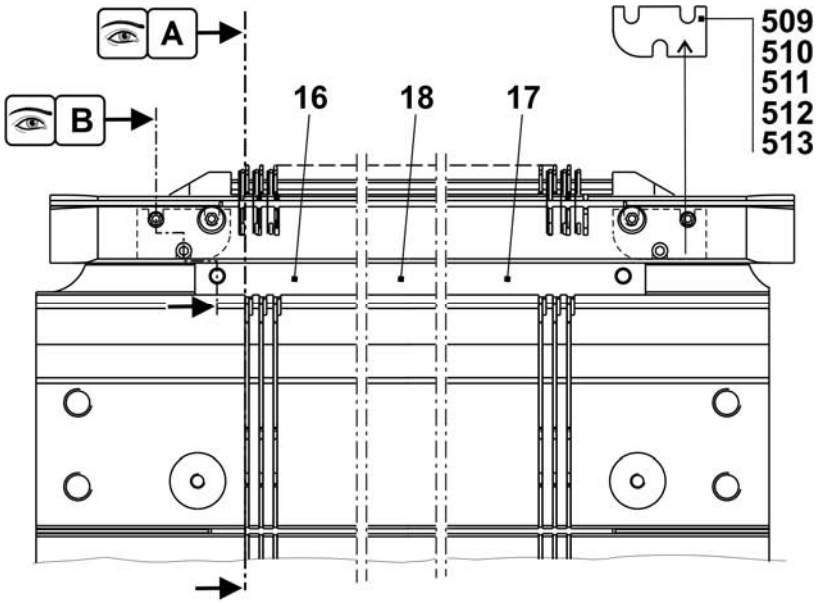

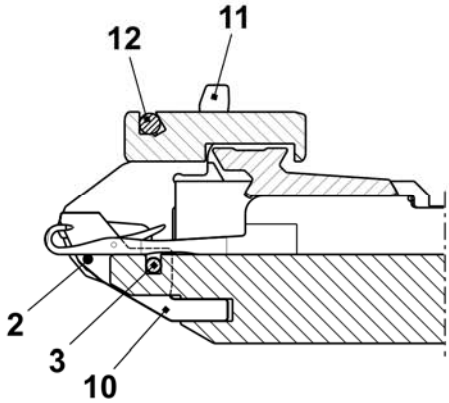

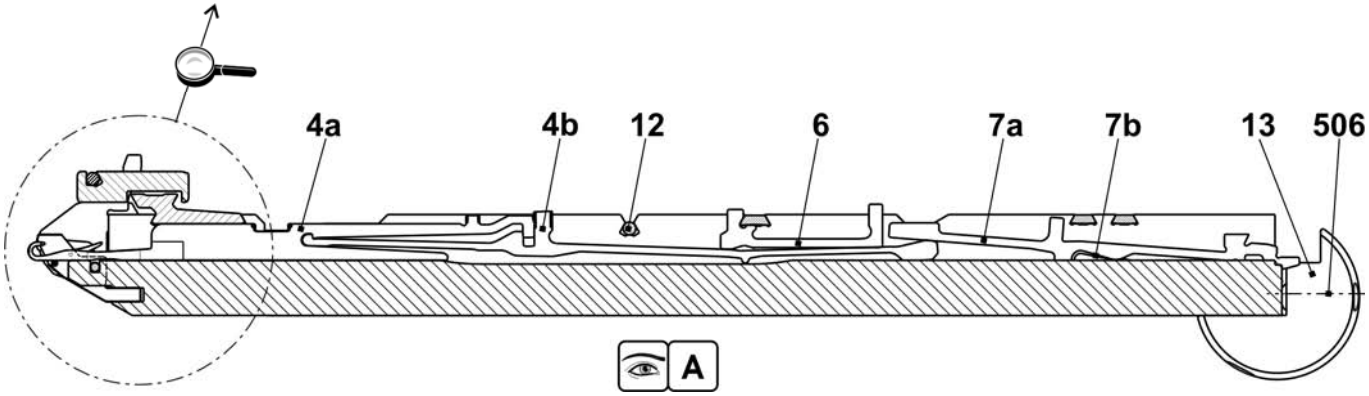

Continuation needle bed E5

Pos	Designation	ID		Pos	Designation	ID
Σ	**Needle bed co. at the front and rear E5**	**238 217**				
1	Needle bed at the front + rear E5	238 005		502	Cap screw M6x25	020 137
2	Holding-down jack bed at the rear E5	238 027		504	Cap screw M5x22	023 193
3	Holding-down jack bed at the front E5	238 021		30*	Adjusting piece	206 375
4	Limiter on the left E4-E8	205 343		31*	Set screw co.	207 712
5	Limiter on the right E4-E8	205 344		40*	Disk brush	235 612
8	Cover rail at the rear	237 379		41*	Container, plate brush	233 012
9	Cover rail at the front E5	237 377		42*	Disk brush	235 612
10	Cover rail	237 382		50*	Adjusting bolt	240 765
11	Cover rail	237 383		520*	Cap screw M5x12	020 032
501	Cap screw M5x10	022 918		521*	Adjusting washer P6x12x0.3	023 540

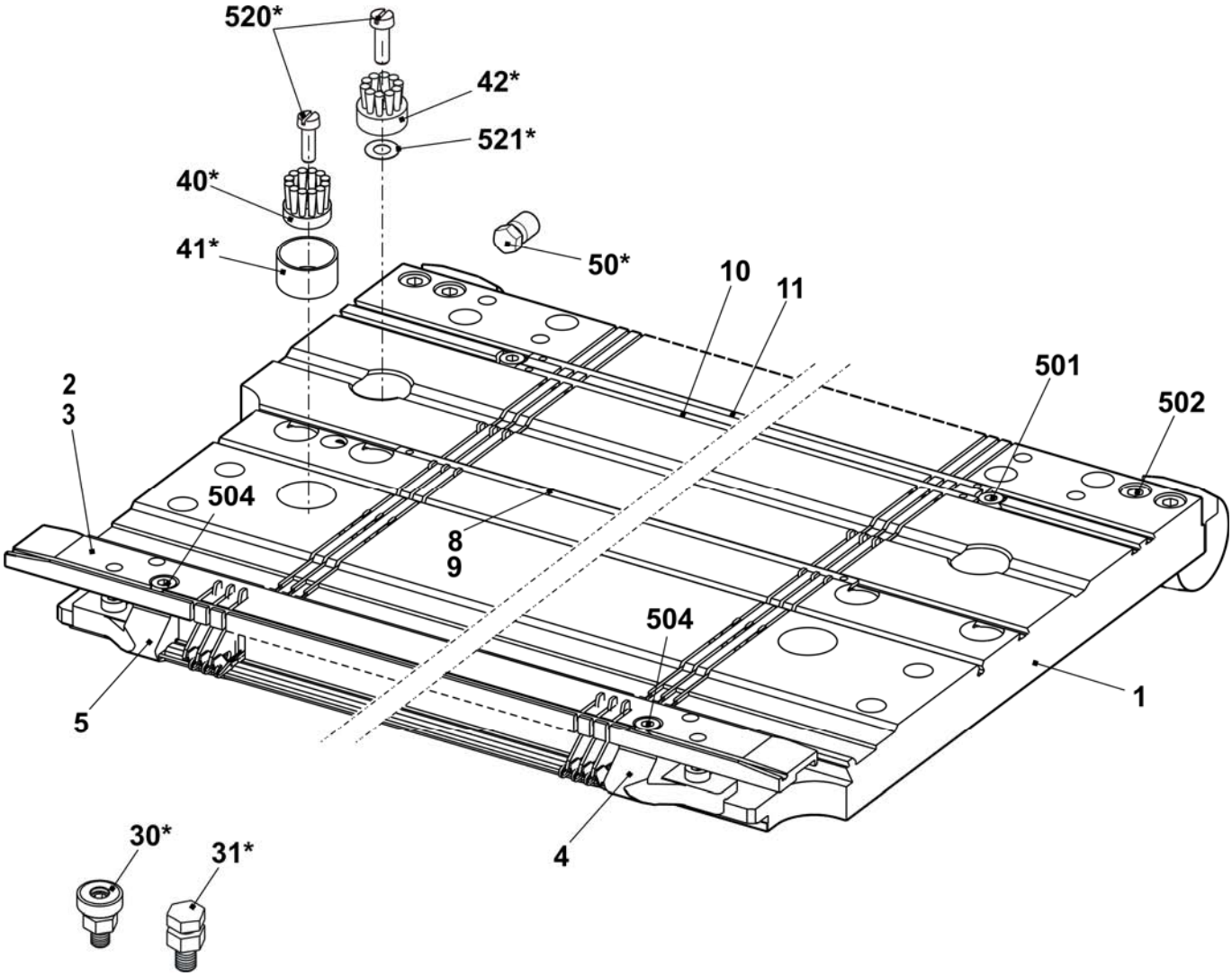

Needle bed E7

Pos	Designation	ID		Pos	Designation	ID
Σ	**Needle bed co. at the front + rear E7**	**238 218**		16	Needle rail on the left	205 311
2	Spring steel wire E7-8 Ø0.8	227 078		17	Needle rail on the right	205 312
3	Spring steel wire Ø2.0	223 854		18	Needle rail in the middle	237 387
4a	Needle E7 with round hook	205 397		503	Cap screw M5x8-8.8	023 154
4b	Coupling part E4-E8	200 682		505	Cap screw M5x8	023 379
6	Intermediate slider E5-E8	210 176		506	Set screw M6x12-45	022 400
7a	Selection jack E4-E8	200 687		507	Sprung thrust piece B-M10	023 177
7b	Selector spring E4-E8	200 690		509	Shim 0.02x18.5x34	023 194
10	Knock-over bit E7	207 055		510	Shim 0.03x18.5x34	023 195
11	Holding-down jack E7	205 032		511	Shim 0.05x18.5x34	023 196
12	Fixed wire Ø2.8	223 862		512	Shim 0.1x18.5x34	023 197
13	Support	206 352		513	Shim 0.2x18.5x34	023 253

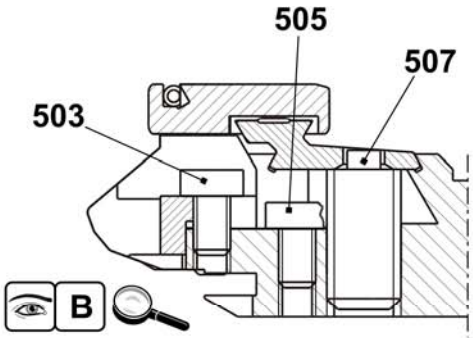

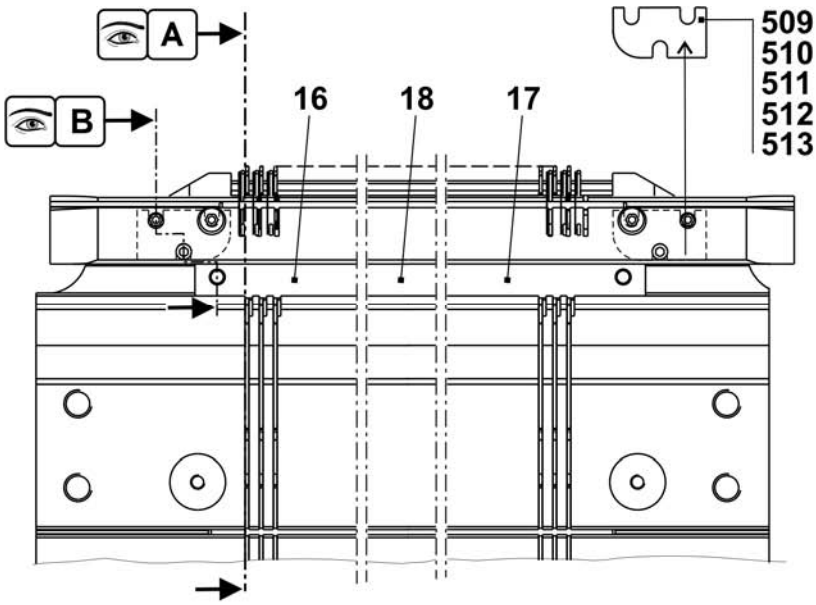

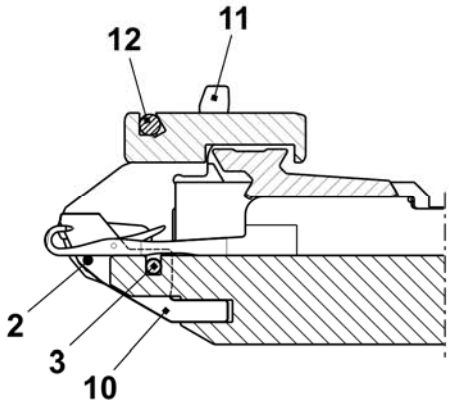

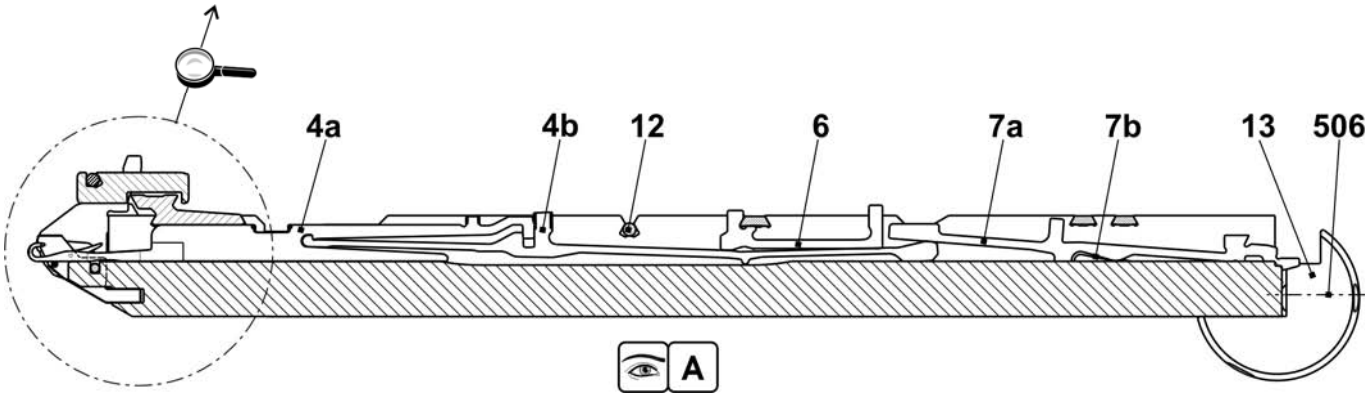

Continuation needle bed E7

Pos	Designation	ID	Pos	Designation	ID
Σ	**Needle bed co. at the front + rear E7**	**238 218**			
1	Needle bed at the front + rear E7	238 006	502	Cap screw M6x25	020 137
2	Holding-down jack bed at the rear E7	238 028	504	Cap screw M5x22	023 193
3	Holding-down jack bed at the front E7	238 022	30*	Adjusting piece	206 375
4	Limiter on the left E4-E8	205 343	31*	Set screw co.	207 712
5	Limiter on the right E4-E8	205 344	40*	Disk brush	235 612
8	Cover rail at the rear	237 379	41*	Container, plate brush	233 012
9	Cover rail at the front E3,5.2	238 018	42*	Disk brush	235 612
10	Cover rail	237 382	50*	Adjusting bolt	240 765
11	Cover rail	237 383	520*	Cap screw M5x12	020 032
501	Cap screw M5x10	022 918	521*	Adjusting washer P6x12x0.3	023 540

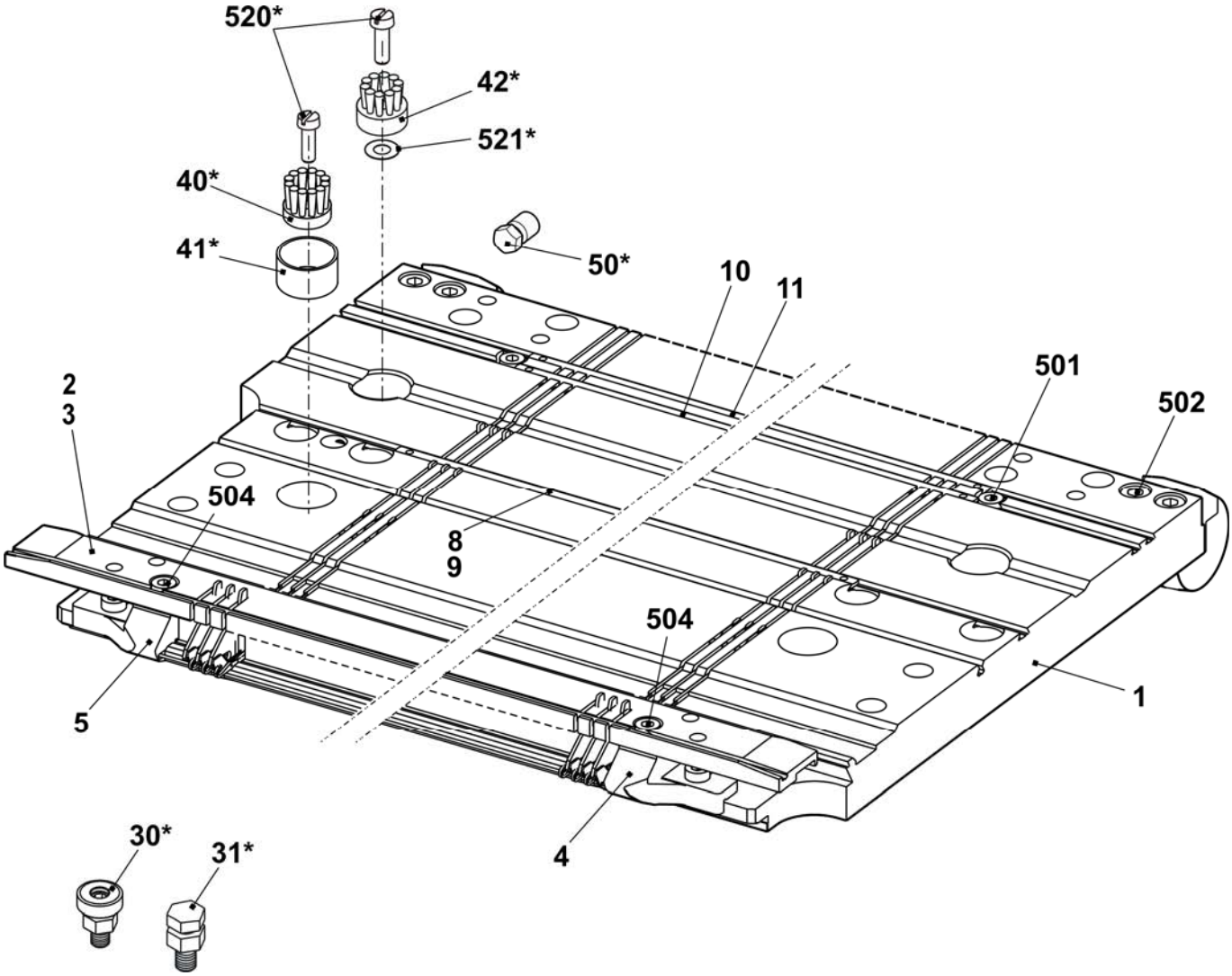

Needle bed E8

Pos	Designation	ID		Pos	Designation	ID
Σ	**Needle bed co. at the front and rear E8**	**238 219**		16	Needle rail on the left	205 311
2	Spring steel wire E7-8 Ø0.8	227 078		17	Needle rail on the right	205 312
3	Spring steel wire Ø2.0	223 854		18	Needle rail in the middle	237 387
4a	Needle E8 with round hook	208 745		503	Cap screw M5x8-8.8	023 154
4b	Coupling part E4-E8	200 682		505	Cap screw M5x8	023 379
6	Intermediate slider E5-E8	237 323		506	Set screw M6x12-45	022 400
7a	Selection jack E4-E8	200 687		507	Sprung thrust piece B-M10	023 177
7b	Selector spring E4-E8	200 690		509	Shim 0.02x18.5x34	023 194
10	Knock-over bit E8	207 054		510	Shim 0.03x18.5x34	023 195
11	Holding-down jack E8	205 028		511	Shim 0.05x18.5x34	023 196
12	Fixed wire Ø2.8	223 862		512	Shim 0.1x18.5x34	023 197
13	Support	206 352		513	Shim 0.2x18.5x34	023 253

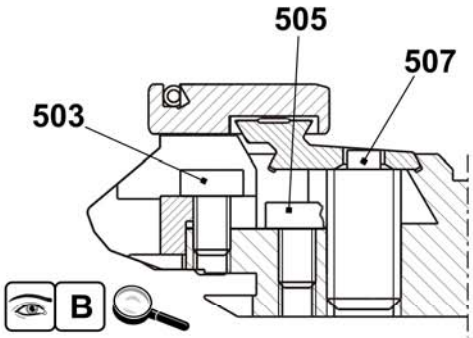

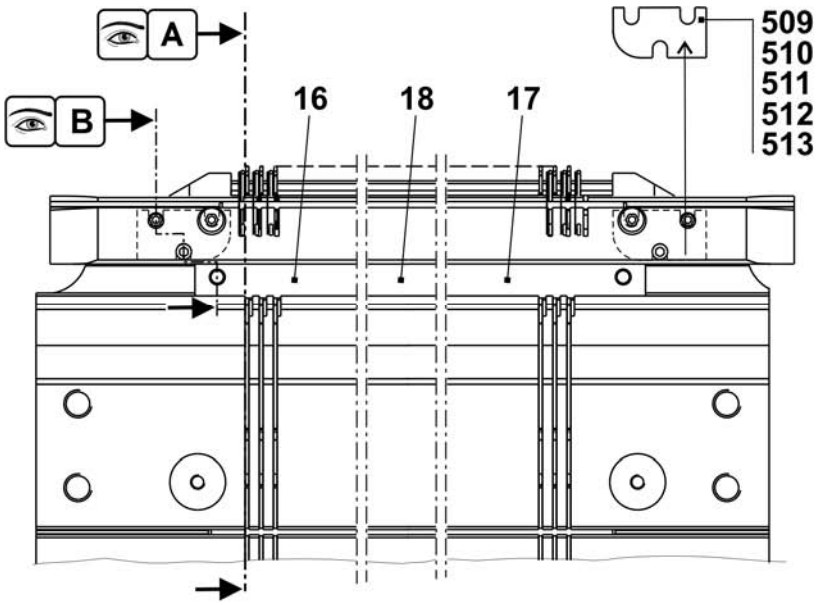

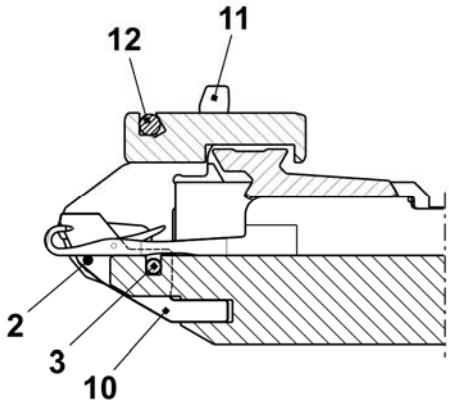

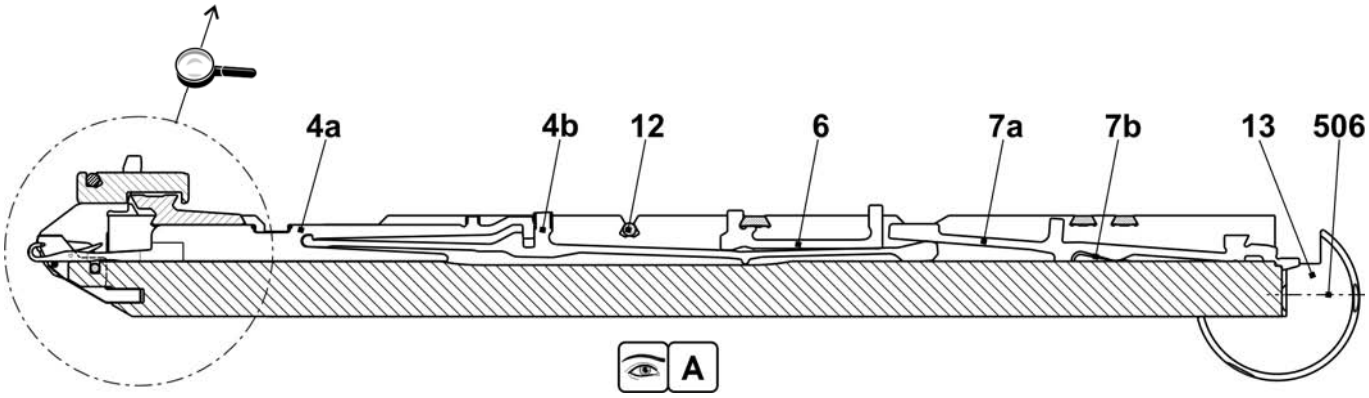

Continuation needle bed E8

Pos	Designation	ID	Pos	Designation	ID
Σ	**Needle bed co. at the front and rear E8**	**238 219**			
1	Needle bed at the front + rear E8	238 007	502	Cap screw M6x25	020 137
2	Holding-down jack bed at the rear E8	238 029	504	Cap screw M5x22	023 193
3	Holding-down jack bed at the front E8	238 023	30*	Adjusting piece	206 375
4	Limiter on the left E4-E8	205 343	31*	Set screw co.	207 712
5	Limiter on the right E4-E8	205 344	40*	Disk brush	235 612
8	Cover rail at the rear	237 379	41*	Container, plate brush	233 012
9	Cover rail at the front E8	238 015	42*	Disk brush	235 612
10	Cover rail	237 382	50*	Adjusting bolt	240 765
11	Cover rail	237 383	520*	Cap screw M5x12	020 032
501	Cap screw M5x10	022 918	521*	Adjusting washer P6x12x0.3	023 540

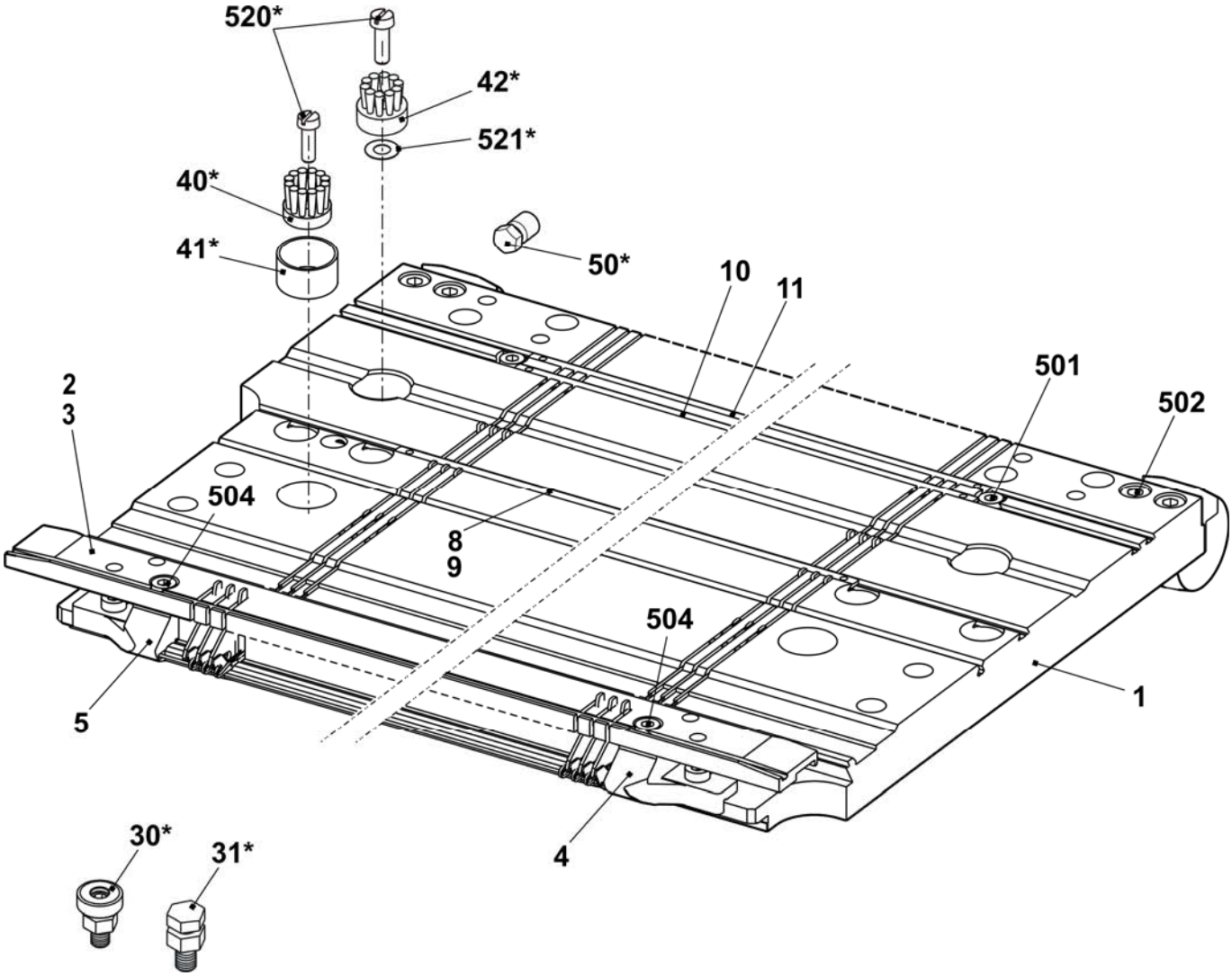

Needle bed E10

Pos	Designation	ID		Pos	Designation	ID
Σ	**Needle bed co. at the front and rear E10**	**241 680**		16	Needle rail on the left	205 311
2	Spring steel wire E10-14 Ø0.6	223 849		17	Needle rail on the right	205 312
3	Spring steel wire Ø2.0	223 854		18	Needle rail in the middle	237 387
4a	Needle E10 with round hook	205 398		503	Cap screw M5x8-8.8	023 154
4b	Coupling part E10-12	200 683		505	Cap screw M5x8	023 379
6	Intermediate slider with brake E10	237 324		506	Set screw M6x12-45	022 400
7a	Selector spring E10-12	200 691		507	Sprung thrust piece B-M10	023 177
7b	Selection jack E10-12	200 688		509	Shim 0.02x18.5x34	023 194
10	Knock-over bit E10	239 756		510	Shim 0.03x18.5x34	023 195
11	Holding-down jack trick wall E10	239 815		511	Shim 0.05x18.5x34	023 196
12	Fixed wire Ø2.8	223 862		512	Shim 0.1x18.5x34	023 197
13	Support	206 352		513	Shim 0.2x18.5x34	023 253

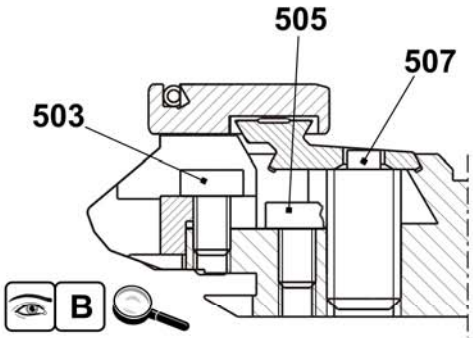

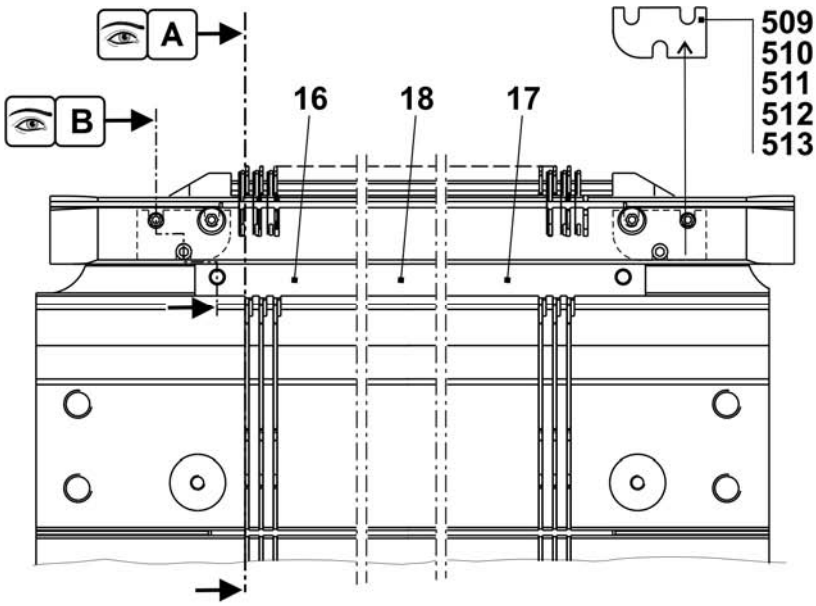

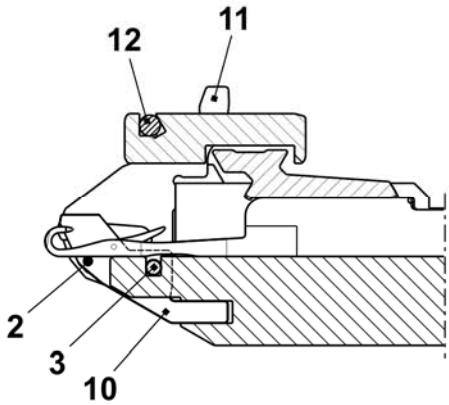

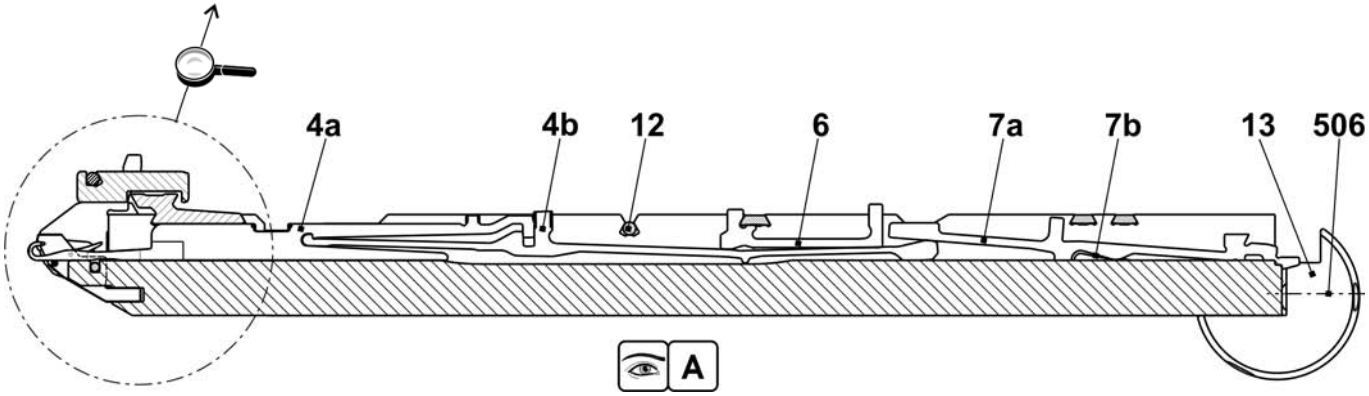

Continuation needle bed E10

Pos	Designation	ID	Pos	Designation	ID
Σ	**Needle bed co. at the front and rear E10**	**241 680**			
1	Needle bed at the front + rear E10	241 671	502	Cap screw M6x25	020 137
2	Holding-down jack bed at the rear E10	238 030	504	Cap screw M5x22	023 193
3	Holding-down jack bed at the front E10	238 024	30*	Adjusting piece	206 375
4	Limiter on the left E10-14	205 764	31*	Set screw co.	207 712
5	Limiter on the right E10-14	205 765	40*	Disk brush	235 612
8	Cover rail at the rear	237 379	41*	Container, plate brush	233 012
9	Cover rail at the front E5.2	237 506	42*	Disk brush	235 612
10	Cover rail	237 382	50*	Adjusting bolt	240 765
11	Cover rail	237 383	520*	Cap screw M5x12	020 032
501	Cap screw M5x10	022 918	521*	Adjusting washer P6x12x0.3	023 540

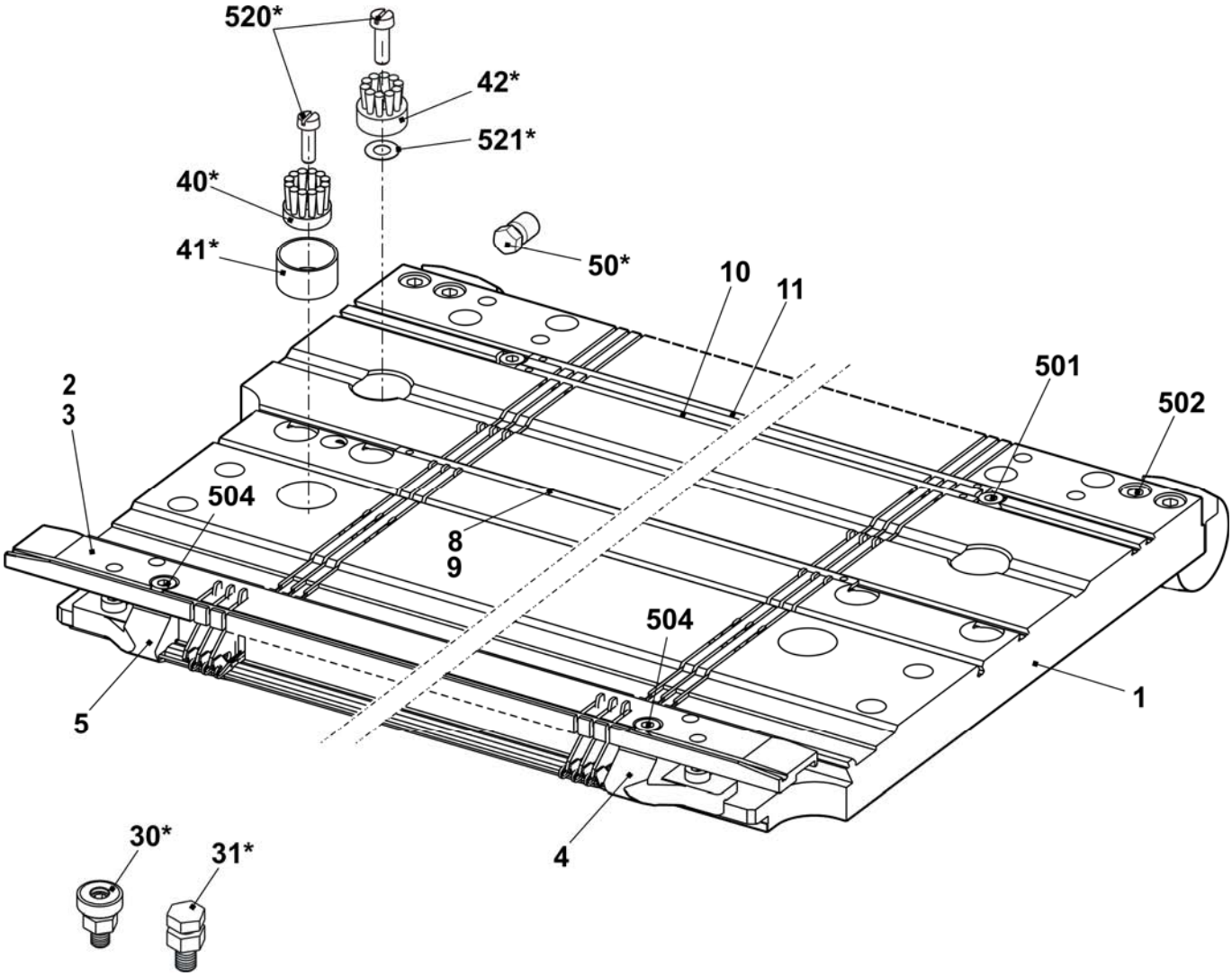

Needle bed E12

Pos	Designation	ID		Pos	Designation	ID
Σ	**Needle bed co. at the front and rear E12**	**253 411**		23	Needle rail on the left	205 311
4	Main trick wall E12	252 628		24	Needle rail on the right	205 312
6	Fixed wire Ø3.4	223 868		26	Support	206 352
7	Spring steel wire E10-14 Ø0.6	223 849		28	Needle rail in the middle	237 387
8	Spring steel wire Ø2	251 085		501	Cap screw M5x8-8.8 M	023 154
9a	Needle E12	204 009		504	Cap screw M5x12-8.8	022 943
9b	Coupling part E10-12	200 683		506	Set screw M6x12-45	022 400
11	Intermediate slider with brake E10	237 324		507	Sprung thrust piece B-M10	023 177
12a	Selection jack E10-12	200 688		508	Shim 0.02x18.5x34	023 194
12b	Selector spring E10-12	200 691		509	Shim 0.03x18.5x34	023 195
13	Knock-over bit E12	205 013		510	Shim 0.05x18.5x34	023 196
14	Holding-down jack trick wall E12	227 821		511	Shim 0.1x18.5x34	023 197
21	Fixed wire Ø2.8	223 862		512	Shim 0.2x18.5x34	023 253

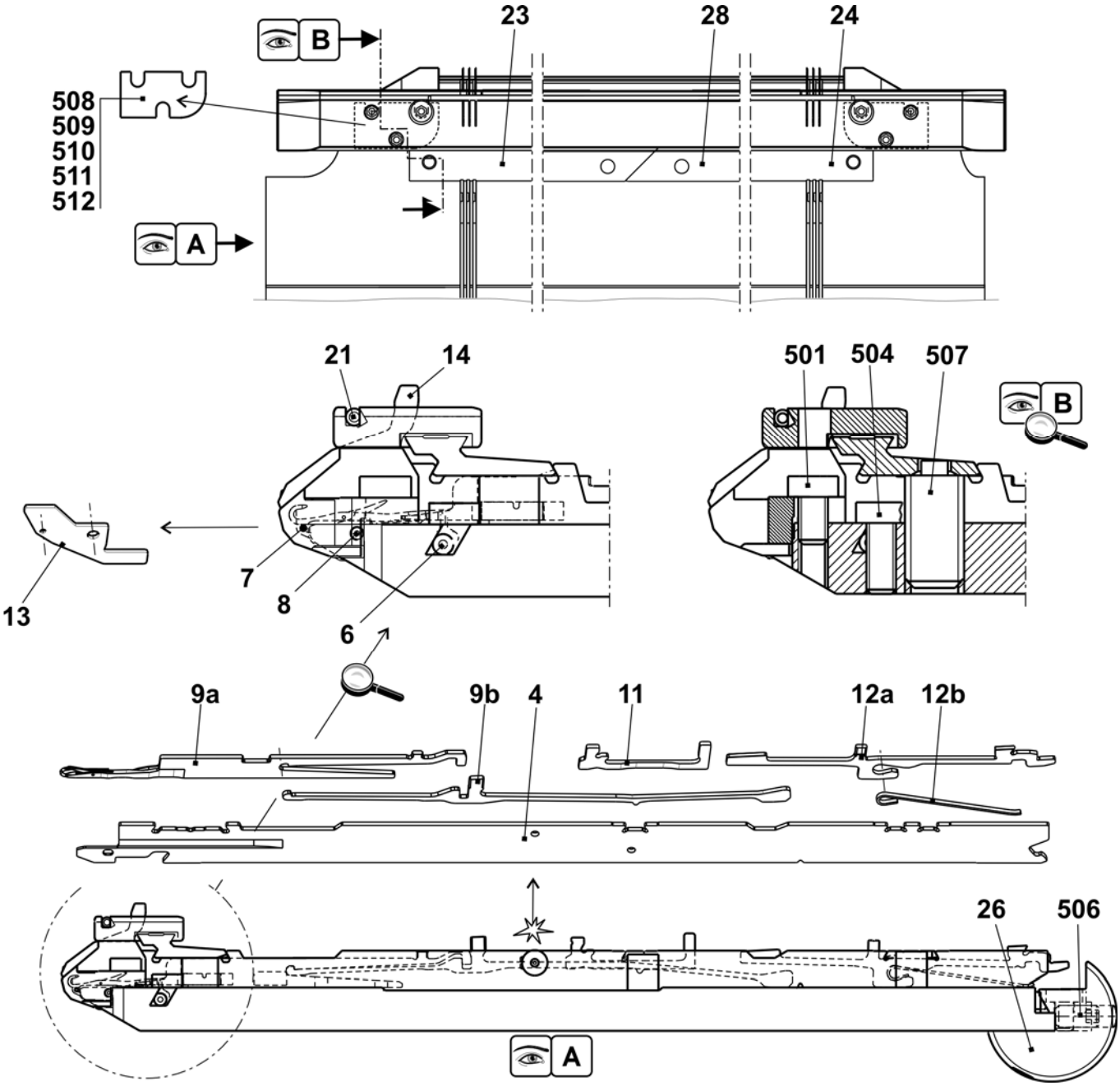

Continuation needle bed E12

Pos	Designation	ID	Pos	Designation	ID
Σ	**Needle bed co. at the front and rear E12**	**253 411**	27	Stop screw	214 039
1	Needle bed at the front and rear E6.2	253 409	500	Cap screw M6x14	022 658
2	Holding-down jack bed at the front E12	238 025	502	Cap screw M5x8	023 379
3	Holding-down jack bed at the rear E12	238 031	503	Cap screw M5x22	023 193
5	Pressure slide	237 509	505	Set screw M3.5x3-1	020 512
8	Spring steel wire Ø2.0	251 085	30*	Adjusting piece	206 375
15	Limiter on the left E10-14	205 764	31*	Set screw co.	207 712
16	Limiter on the right E10-14	205 765	40*	Disk brush	235 612
17	Cover rail at the rear	237 379	41*	Container disk brush	233 012
18	Cover rail at the front E6.2	237 507	42*	Disk brush	235 612
19	Cover rail	237 382	50*	Adjusting bolt	240 765
20	Cover rail	237 383	520*	Cap screw M5x12	020 032
25	Bush	206 090	521*	Adjusting washer P6x12x0.3	023 540

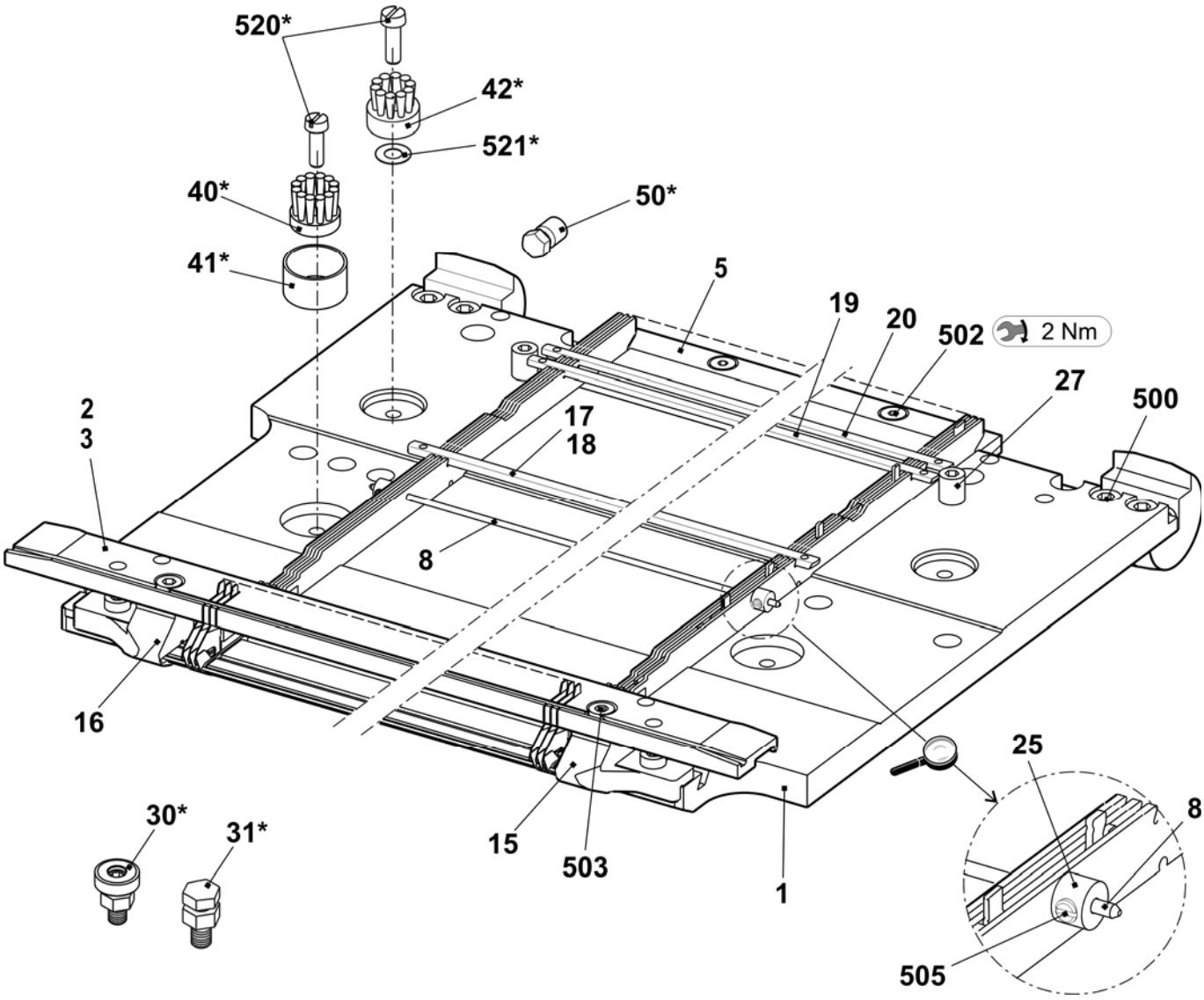

Needle bed E14

Pos	Designation	ID		Pos	Designation	ID
Σ	**Needle bed co. at the front + rear E14**	**253 412**				
4	Main trick wall E14	252 629		24	Needle rail on the right	205 312
6	Fixed wire Ø3.4	223 868		26	Support	206 352
7	Spring steel wire E10-14 Ø0.6	223 849		28	Needle rail in the middle	237 387
8	Spring steel wire Ø2	251 085		501	Cap screw M5x8-8.8 M	023 154
9a	Needle E14	209 614		504	Cap screw M5x12-8.8	022 943
9b	Coupling part E14	209 633		506	Set screw M6x12-45	022 400
11	Intermediate slider with brake E14	237 373		507	Sprung thrust piece B-M10	023 177
12	Selection jack with spring E14	224 725		508	Shim 0.02x18.5x34	023 194
13	Knock-over bit E14	209 649		509	Shim 0.03x18.5x34	023 195
14	Holding-down jack trick wall E14	235 262		510	Shim 0.05x18.5x34	023 196
21	Fixed wire Ø2.8	223 862		511	Shim 0.1x18.5x34	023 197
23	Needle rail on the left	205 311		512	Shim 0.2x18.5x34	023 253

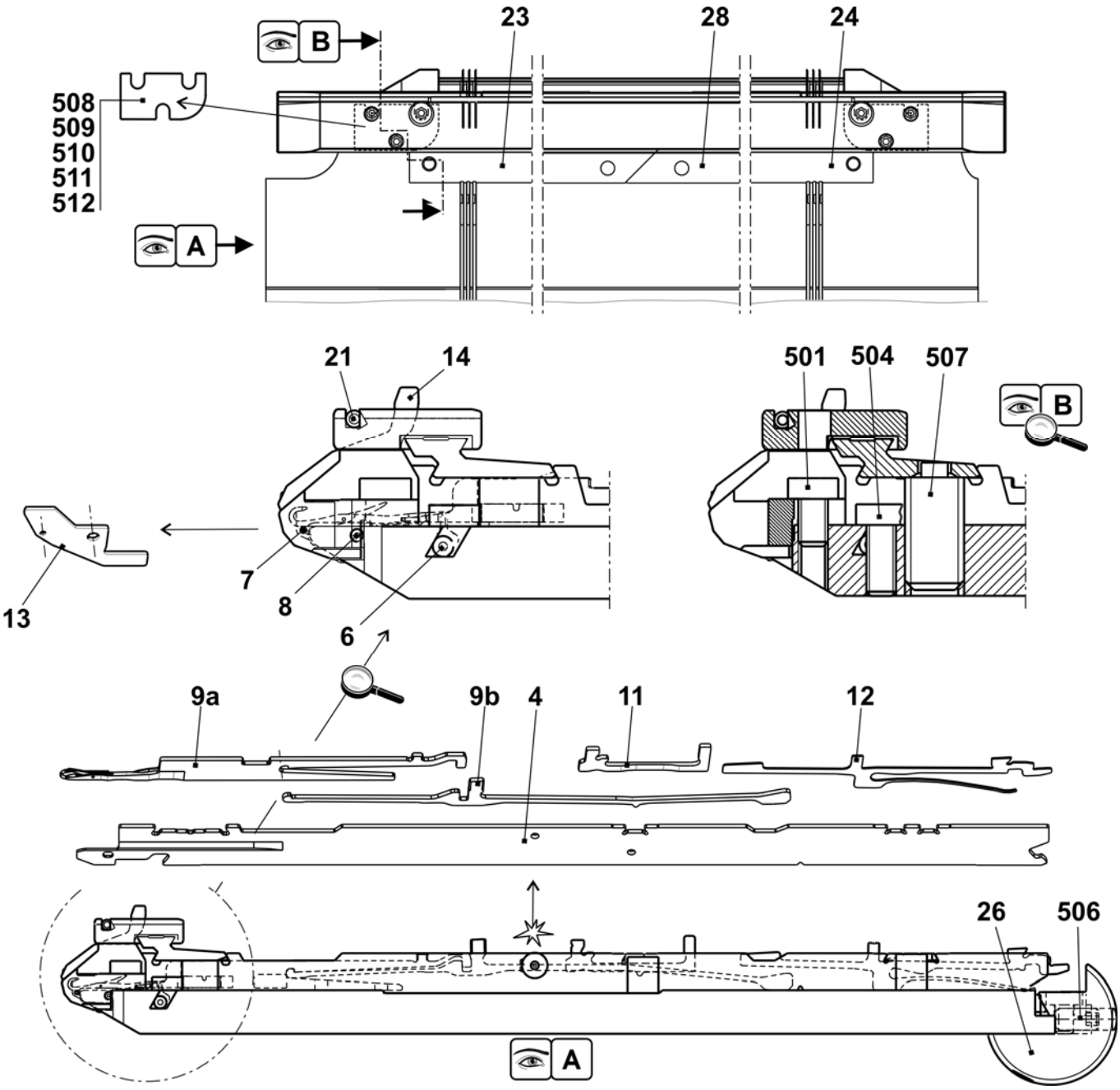

Continuation needle bed E14

Pos	Designation	ID	Pos	Designation	ID
Σ	**Needle bed co. at the front + rear E14**	**253 412**	27	Stop screw	214 039
1	Needle bed at the front + rear E14 + E7.2	253 410	500	Cap screw M6x14	022 658
2	Holding-down jack bed at the front E14	238 026	502	Cap screw M5x8	023 379
3	Holding-down jack bed at the rear E14	238 032	503	Cap screw M5x22	023 193
5	Pressure slide	237 509	505	Set screw M3.5x3-1	020 512
8	Spring steel wire Ø2.0	251 085	30*	Adjusting piece	206 375
15	Limiter on the left E10-14	205 764	31*	Set screw co.	207 712
16	Limiter on the right E10-14	205 765	40*	Disk brush	235 612
17	Cover rail at the rear	237 379	41*	Container disk brush	233 012
18	Cover rail at the front E7.2	237 508	42*	Disk brush	235 612
19	Cover rail	237 382	50*	Adjusting bolt	240 765
20	Cover rail	237 383	520*	Cap screw M5x12	020 032
25	Bush	206 090	521*	Adjusting washer P6x12x0.3	023 540

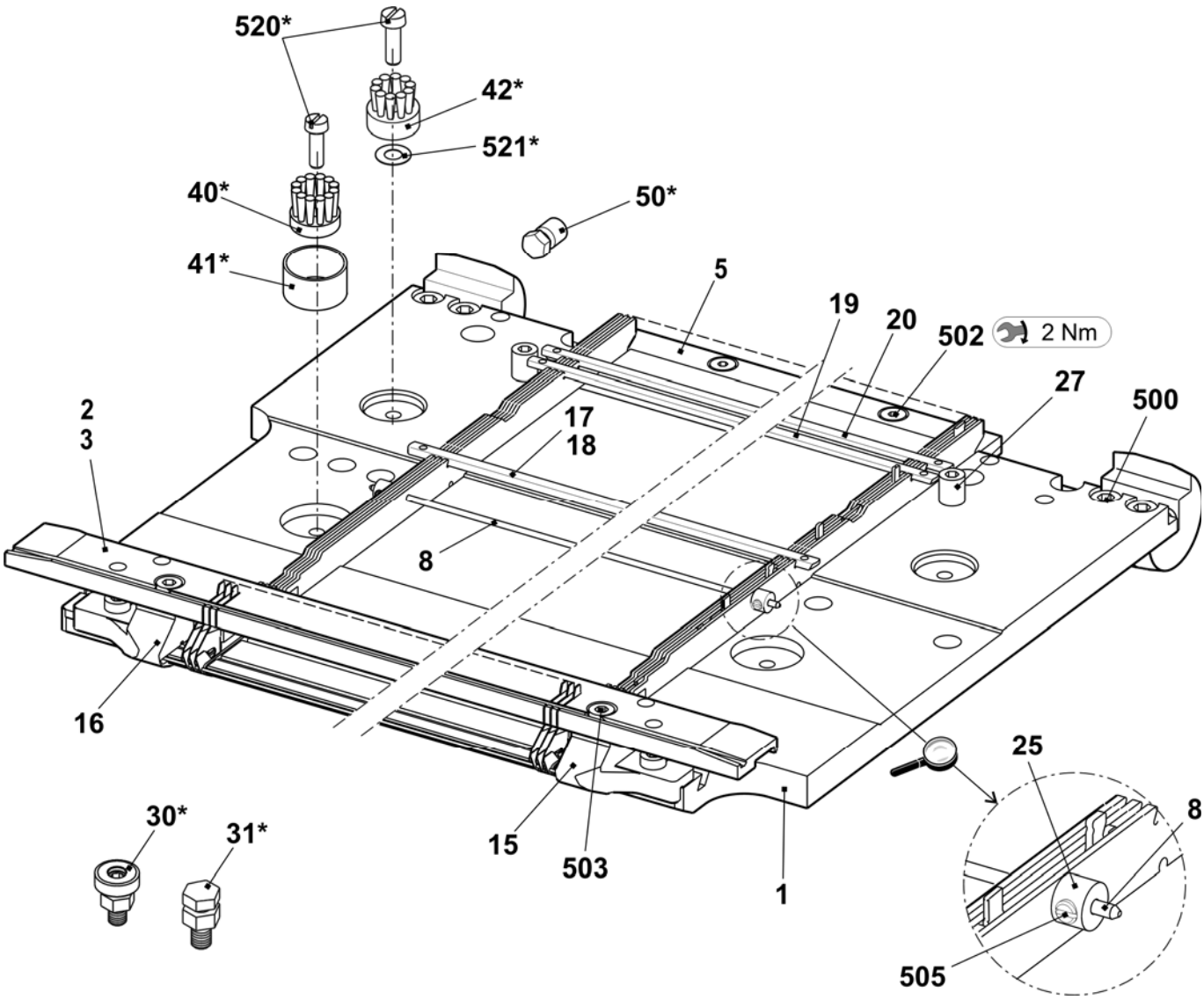

Needle bed E16

Pos	Designation	ID	Pos	Designation	ID
Σ	**Needle bed co. at the front + rear E16**	**251 114**			
4	Main trick wall E16	245 319	24	Needle rail on the right	205 312
6	Fixed wire Ø3.4	223 868	26	Support	206 352
7	Spring steel wire Ø0.5	238 942	28	Needle rail in the middle	237 387
8	Spring steel wire Ø2	251 085	501	Cap screw M5x8-8.8 M	023 154
9a	Needle E16-18	232 243	504	Cap screw M5x12-8.8	022 943
9b	Coupling part E16-20	220 382	506	Set screw M6x12-45	022 400
11	Intermediate slider with brake E16	237 326	507	Sprung thrust piece B-M10	023 177
12	Selection jack E16-20	222 265	508	Shim 0.02x18.5x34	023 194
13	Knock-over bit E16	222 503	509	Shim 0.03x18.5x34	023 195
14	Holding-down jack E16	222 504	510	Shim 0.05x18.5x34	023 196
21	Fixed wire Ø2.8	238 950	511	Shim 0.1x18.5x34	023 197
23	Needle rail on the left	205 311	512	Shim 0.2x18.5x34	023 253

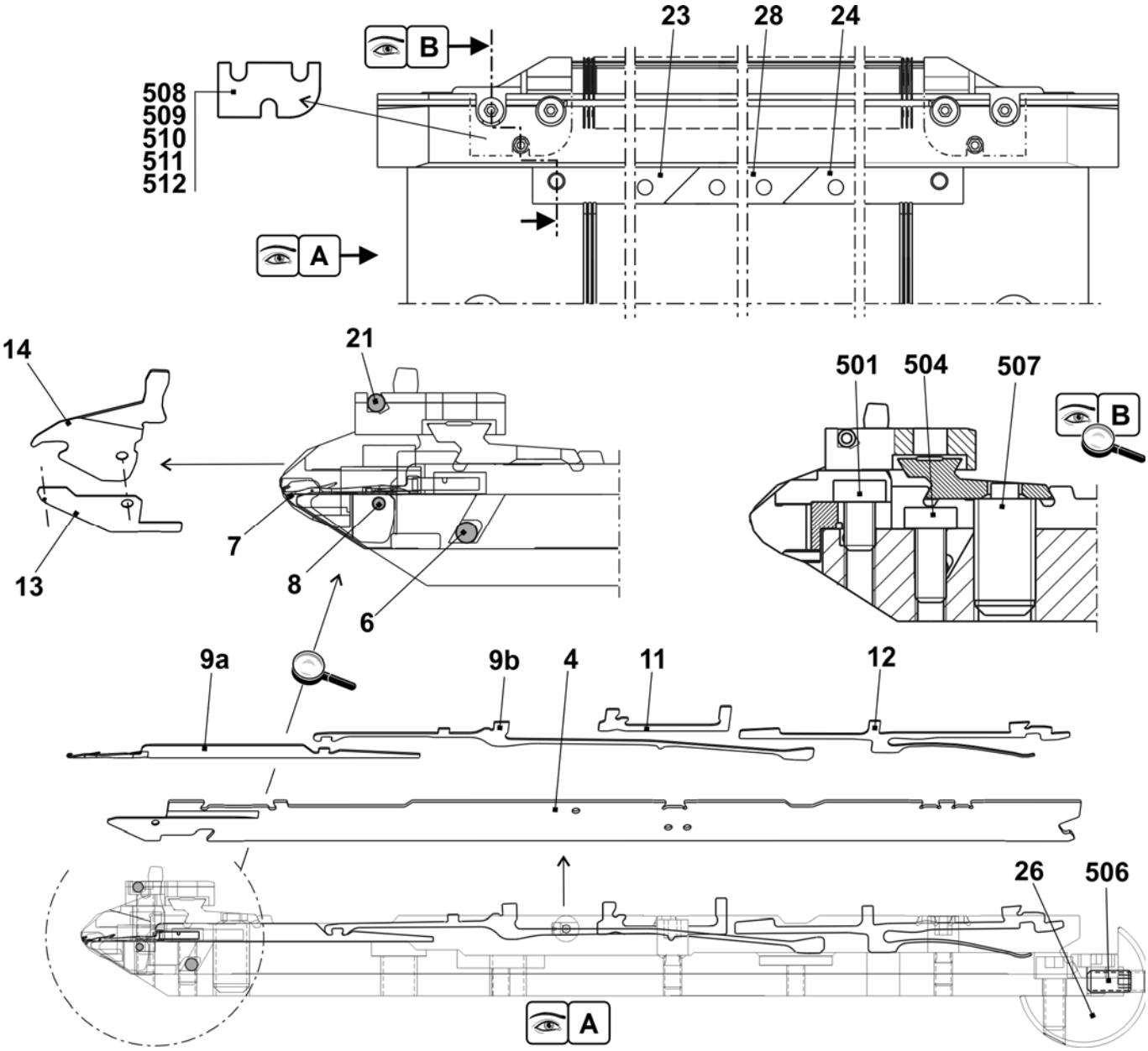

Continuation needle bed E16

Pos	Designation	ID	Pos	Designation	ID
Σ	**Needle bed co. at the front + rear E16**	**251 114**	27	Stop screw	214 039
1	Needle bed at the front rear E16	251 077	500	Cap screw M6x14	022 658
2	Holding-down jack bed at the front E16	238 917	502	Cap screw M5x8	023 379
3	Holding-down jack bed at the rear E16	238 920	503	Cap screw M5x22	023 193
5	Pressure slide	237 509	505	Set screw M3.5x3-1	020 512
8	Spring steel wire Ø2.0	251 085	30*	Adjusting piece	206 375
15	Limiter on the left E16-E20	220 821	31*	Set screw co.	207 712
16	Limiter on the right E16-E20	220 822	40*	Disk brush	235 612
17	Cover rail at the rear	237 379	41*	Container disk brush	233 012
18	Cover rail at the front E16	238 925	42*	Disk brush	235 612
19	Cover rail	237 382	50*	Adjusting bolt	240 765
20	Cover rail	237 383	520*	Cap screw M5x12	020 032
25	Bush	206 090	521*	Adjusting washer P6x12x0.3	023 540

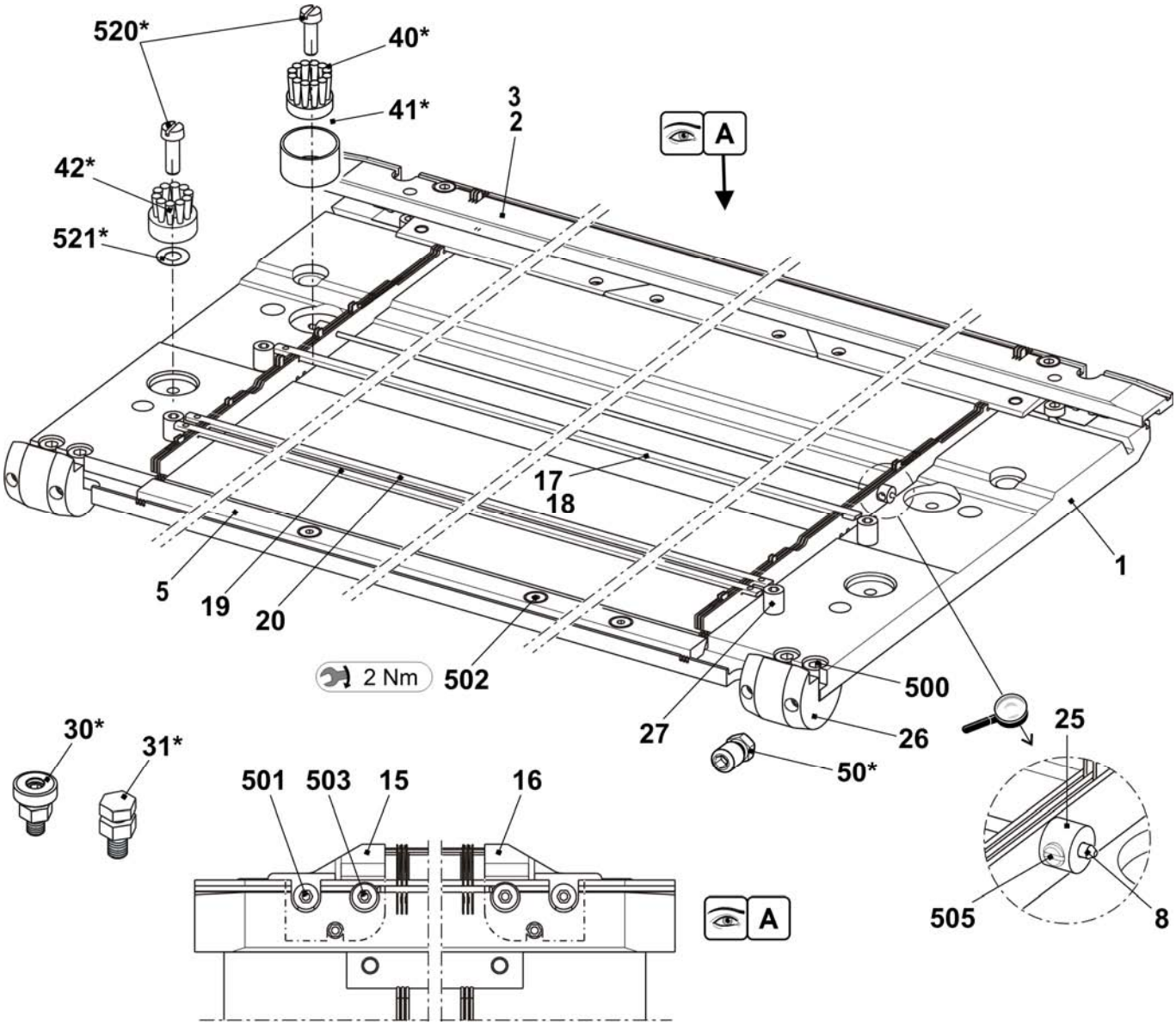

Needle bed E18

Pos	Designation	ID	Pos	Designation	ID
Σ	**Needle bed co. at the front and rear E18**	**251 115**			
4	Main trick wall E18	251 051	24	Needle rail on the right	205 312
6	Fixed wire Ø3.4	223 868	26	Support	206 352
7	Spring steel wire Ø0.5	238 942	28	Needle rail in the middle	237 387
8	Spring steel wire Ø2	251 085	501	Cap screw M5x8-8.8 M	023 154
9a	Needle E18	239 527	504	Cap screw M5x12-8.8	022 943
9b	Coupling part E16-20	220 382	506	Set screw M6x12-45	022 400
11	Intermediate slider with brake E16	237 326	507	Sprung thrust piece B-M10	023 177
12	Selection jack E16-20	222 265	508	Shim 0.02x18.5x34	023 194
13	Knock-over bit E18	220 764	509	Shim 0.03x18.5x34	023 195
14	Holding-down jack E18	220 770	510	Shim 0.05x18.5x34	023 196
21	Fixed wire Ø2.8	238 950	511	Shim 0.1x18.5x34	023 197
23	Needle rail on the left	205 311	512	Shim 0.2x18.5x34	023 253

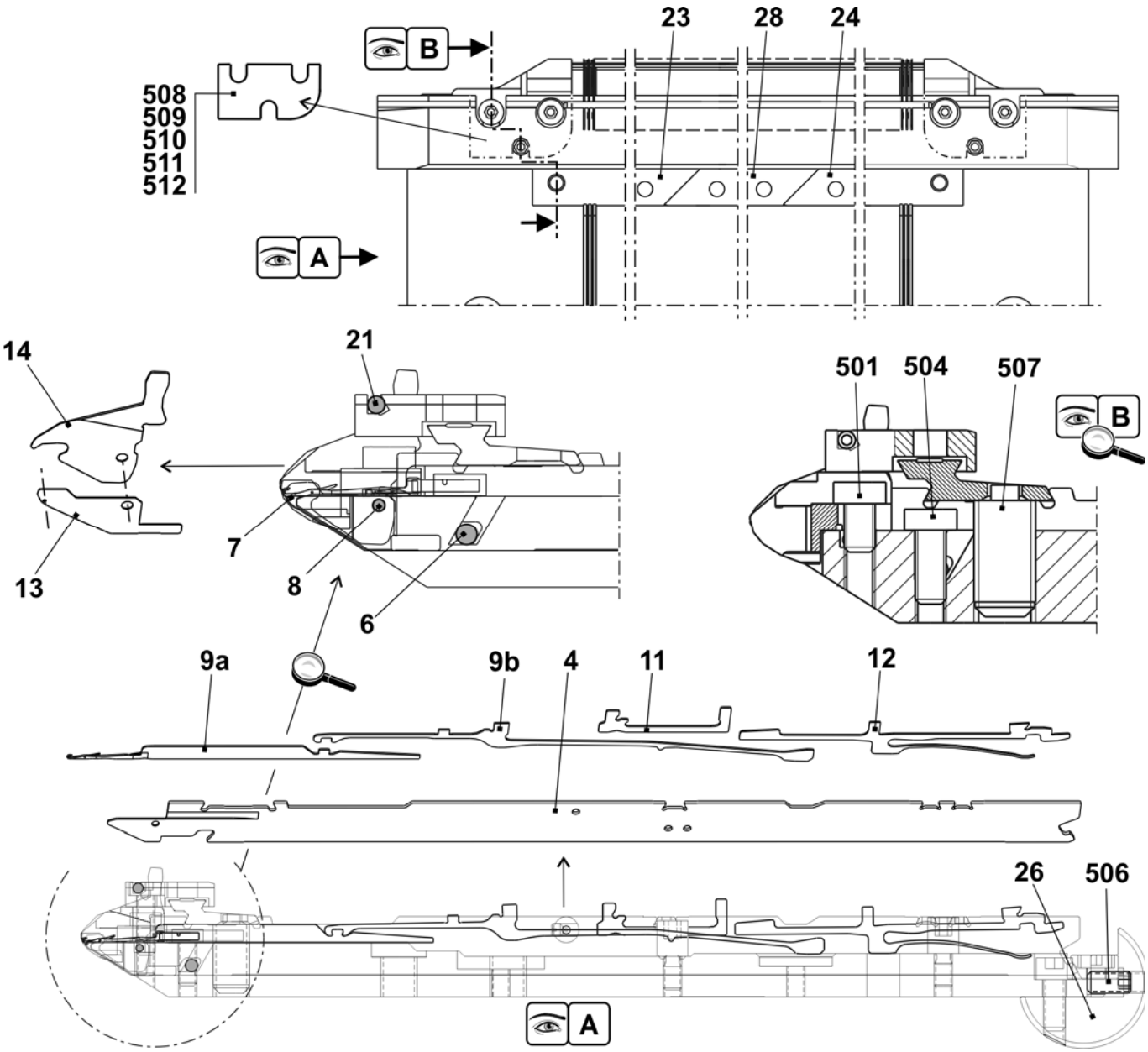

Continuation needle bed E18

Pos	Designation	ID	Pos	Designation	ID
Σ	**Needle bed co. at the front and rear E18**	**251 115**	27	Stop screw	214 039
1	Needle bed at the front + rear E18	250 078	500	Cap screw M6x14	022 658
2	Holding-down jack bed at the front E18	238 918	502	Cap screw M5x8	023 379
3	Holding-down jack bed at the rear E18	238 921	503	Cap screw M5x22	023 193
5	Pressure slide	237 509	505	Set screw M3.5x3-1	020 512
8	Spring steel wire Ø2.0	251 085	30*	Adjusting piece	206 375
15	Limiter on the left E16-E20	220 821	31*	Set screw co.	207 712
16	Limiter on the right E16-E20	220 822	40*	Disk brush	235 612
17	Cover rail at the rear	237 379	41*	Container disk brush	233 012
18	Cover rail at the front E9.2	238 020	42*	Disk brush	235 612
19	Cover rail	237 382	50*	Adjusting bolt	240 765
20	Cover rail	237 383	520*	Cap screw M5x12	020 032
25	Bush	206 090	521*	Adjusting washer P6x12x0.3	023 540

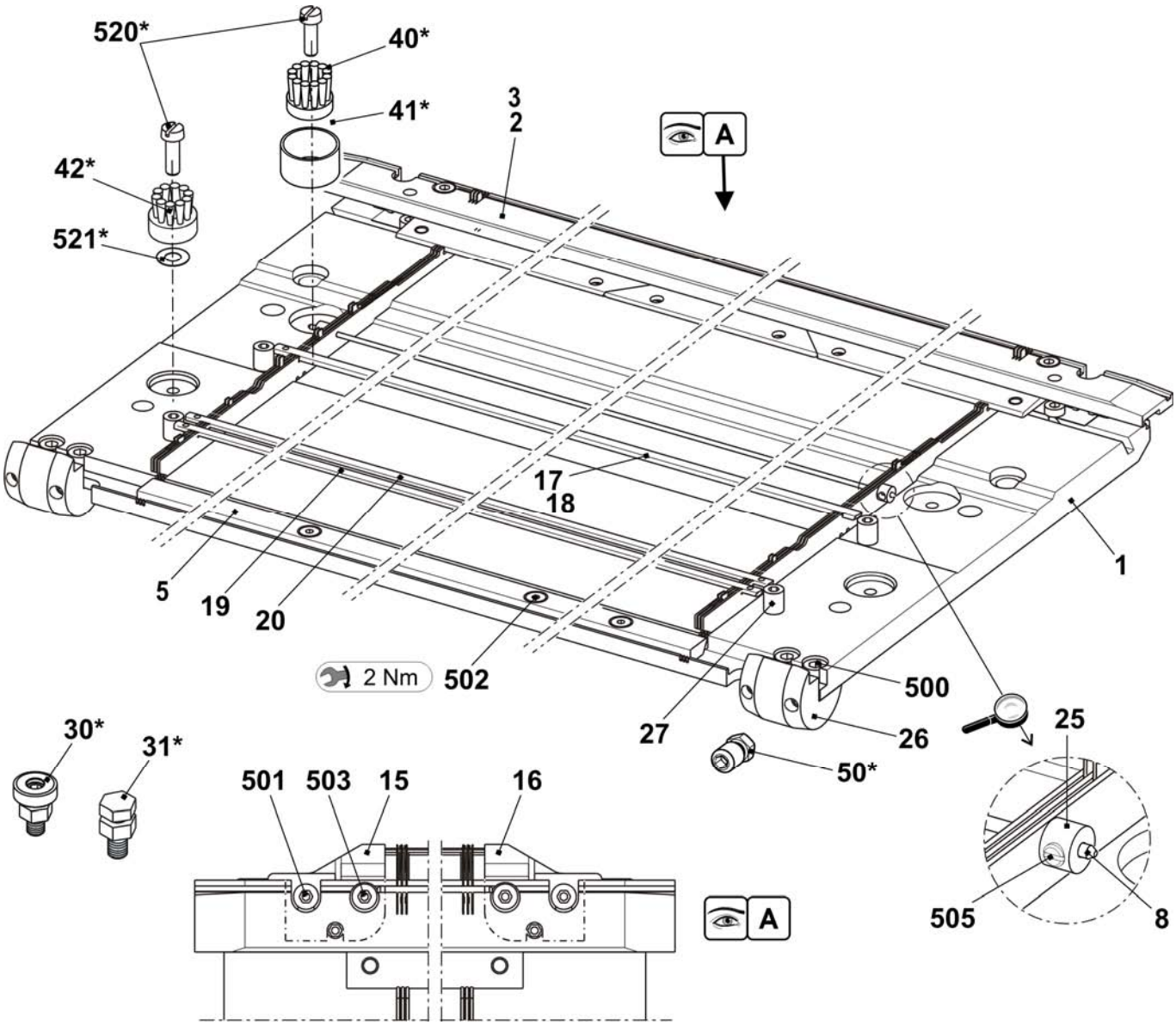

Needle bed E5m.4

Pos	Designation	ID		Pos	Designation	ID
Σ	**Needle bed co. at the front + rear E5m.7**	**238 242**		16	Needle rail on the left	205 311
2	Spring steel wire E4-5 Ø1.0	237 406		17	Needle rail on the right	205 312
3	Spring steel wire Ø2.0	223 854		18	Needle rail in the middle	237 387
4a	Needle E2,5.2-3,5.2	232 581		503	Cap screw M5x8-8.8	023 154
4b	Coupling part E4-E8	200 682		505	Cap screw M5x8	023 379
6	Intermediate slider with brake E5-E8	237 323		506	Set screw M6x12-45	022 400
7a	Selection jack E4-E8	200 687		507	Sprung thrust piece B-M10	023 177
7b	Selector spring E4-E8	200 690		509	Shim 0.02x18.5x34	023 194
10	Knock-over bit E5	204 996		510	Shim 0.03x18.5x34	023 195
11	Holding-down jack E5	205 031		511	Shim 0.05x18.5x34	023 196
12	Fixed wire Ø2.8	223 862		512	Shim 0.1x18.5x34	023 197
13	Support	206 352		513	Shim 0.2x18.5x34	023 253

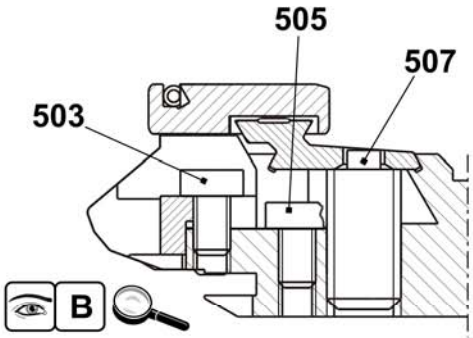

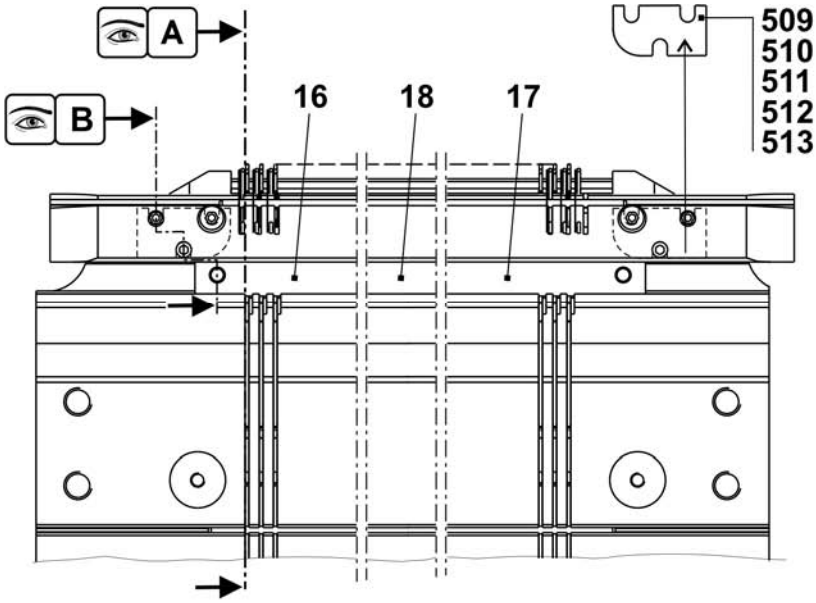

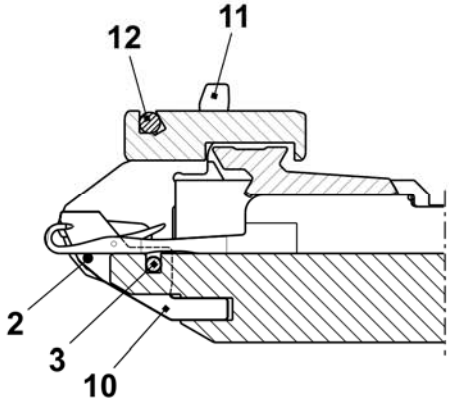

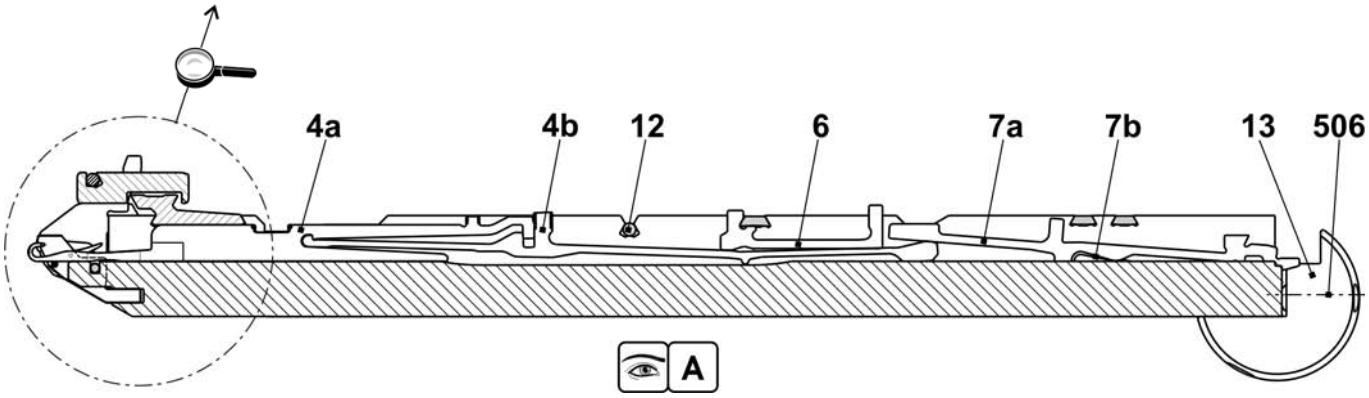

Continuation needle bed E5m.4

Pos	Designation	ID		Pos	Designation	ID
Σ	**Needle bed co. at the front + rear E5m.4**	**238 242**				
1	Needle bed at the front + rear E5	238 005		502	Cap screw M6x25	020 137
2	Holding-down jack bed at the rear E5	238 027		504	Cap screw M5x22	023 193
3	Holding-down jack bed at the front E5	238 021		30*	Adjusting piece	206 375
4	Limiter on the left E4-E8	205 343		31*	Set screw co.	207 712
5	Limiter on the right E4-E8	205 344		40*	Disk brush	235 612
8	Cover rail at the rear	237 379		41*	Container, plate brush	233 012
9	Cover rail at the front E5	237 377		42*	Disk brush	235 612
10	Cover rail	237 382		50*	Adjusting bolt	240 765
11	Cover rail	237 383		520*	Cap screw M5x12	020 032
501	Cap screw M5x10	022 918		521*	Adjusting washer P6x12x0.3	023 540

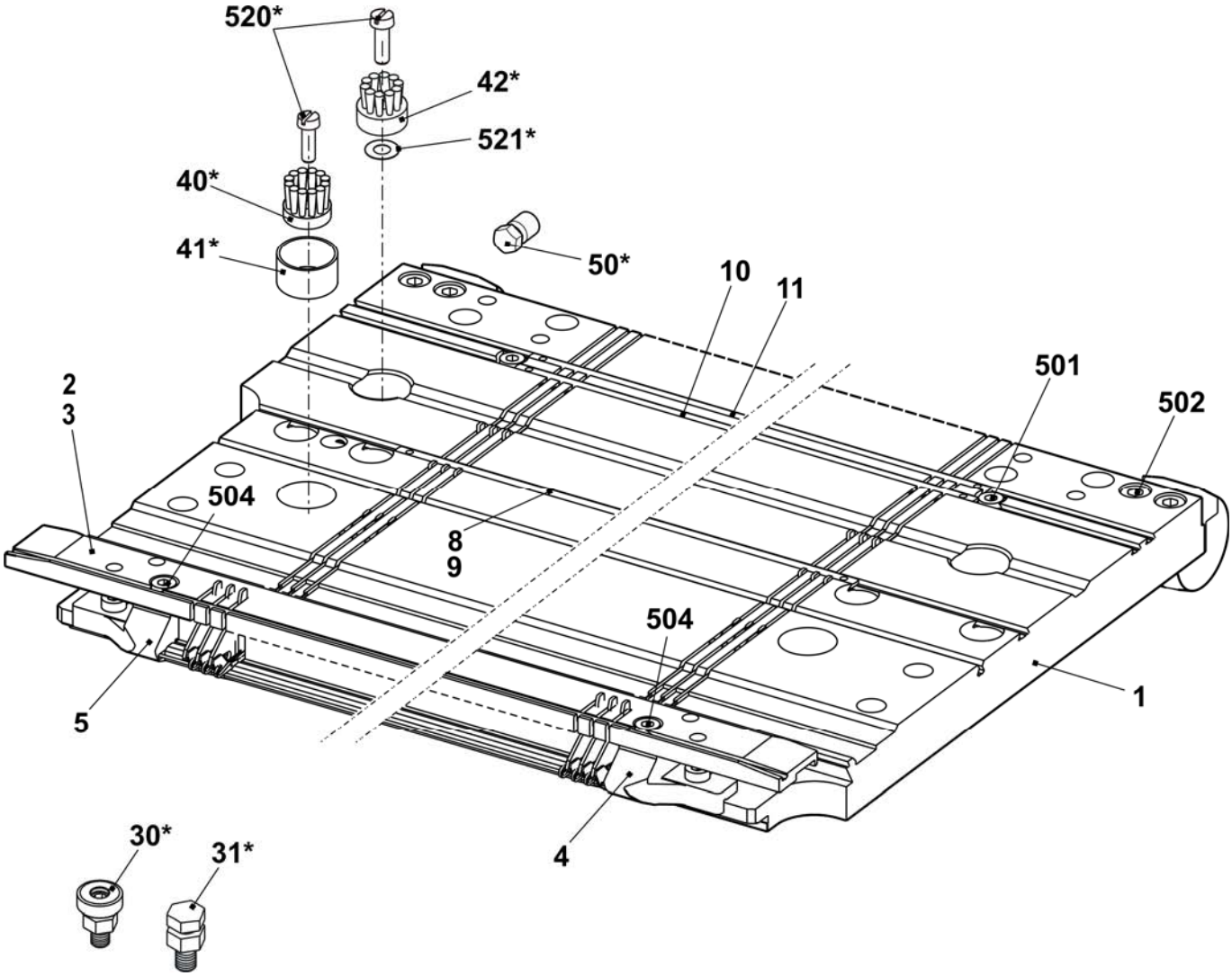

Needle bed E7m.5

Pos	Designation	ID		Pos	Designation	ID
Σ	**Needle bed co. at the front + rear E7m.5**	**238 243**		16	Needle rail on the left	205 311
2	Spring steel wire E7-8 Ø0.8	227 078		17	Needle rail on the right	205 312
3	Spring steel wire Ø2.0	223 854		18	Needle rail in the middle	237 387
4a	Needle E5-6 with round hook	205 396		503	Cap screw M5x8-8.8	023 154
4b	Coupling part E4-E8	200 682		505	Cap screw M5x8	023 379
6	Intermediate slider with brake E5-E8	237 323		506	Set screw M6x12-45	022 400
7a	Selection jack E4-E8	200 687		507	Sprung thrust piece B-M10	023 177
7b	Selector spring E4-E8	200 690		509	Shim 0.02x18.5x34	023 194
10	Knock-over bit E7	207 055		510	Shim 0.03x18.5x34	023 195
11	Holding-down jack E7	205 032		511	Shim 0.05x18.5x34	023 196
12	Fixed wire Ø2.8	223 862		512	Shim 0.1x18.5x34	023 197
13	Support	206 352		513	Shim 0.2x18.5x34	023 253

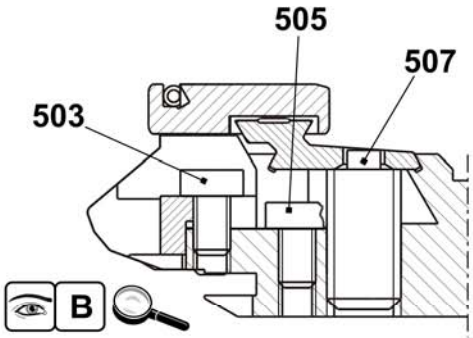

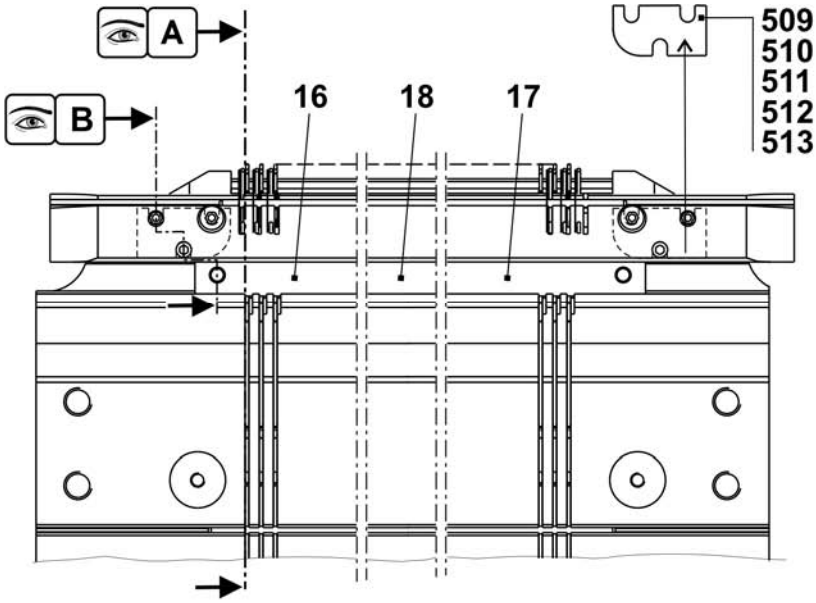

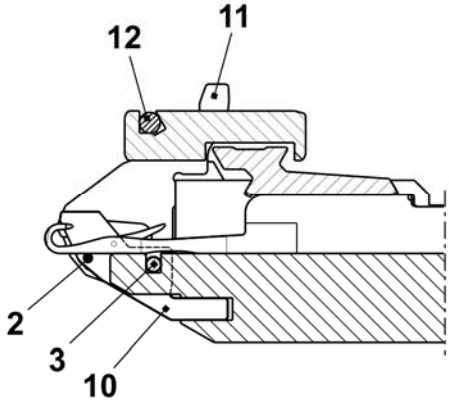

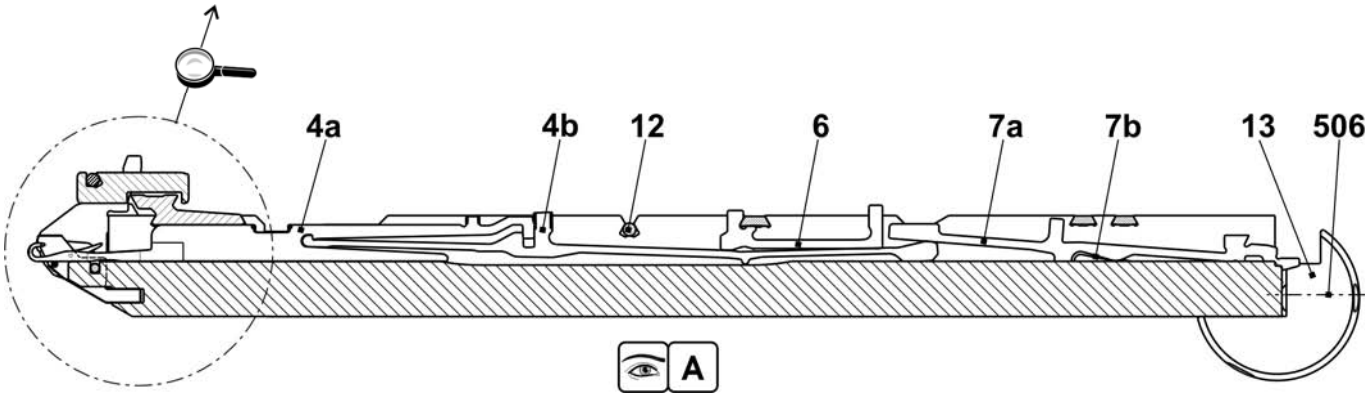

Continuation needle bed E7m.5

Pos	Designation	ID		Pos	Designation	ID
Σ	**Needle bed co. at the front + rear E7m.5**	**238 243**				
1	Needle bed at the front + rear E7	238 006		502	Cap screw M6x25	020 137
2	Holding-down jack bed at the rear E7	238 028		504	Cap screw M5x22	023 193
3	Holding-down jack bed at the front E7	238 022		30*	Adjusting piece	206 375
4	Limiter on the left E4-E8	205 343		31*	Set screw co.	207 712
5	Limiter on the right E4-E8	205 344		40*	Disk brush	235 612
8	Cover rail at the rear	237 379		41*	Container, plate brush	233 012
9	Cover rail at the front E3,5.2	238 018		42*	Disk brush	235 612
10	Cover rail	237 382		50*	Adjusting bolt	240 765
11	Cover rail	237 383		520*	Cap screw M5x12	020 032
501	Cap screw M5x10	022 918		521*	Adjusting washer P6x12x0.3	023 540

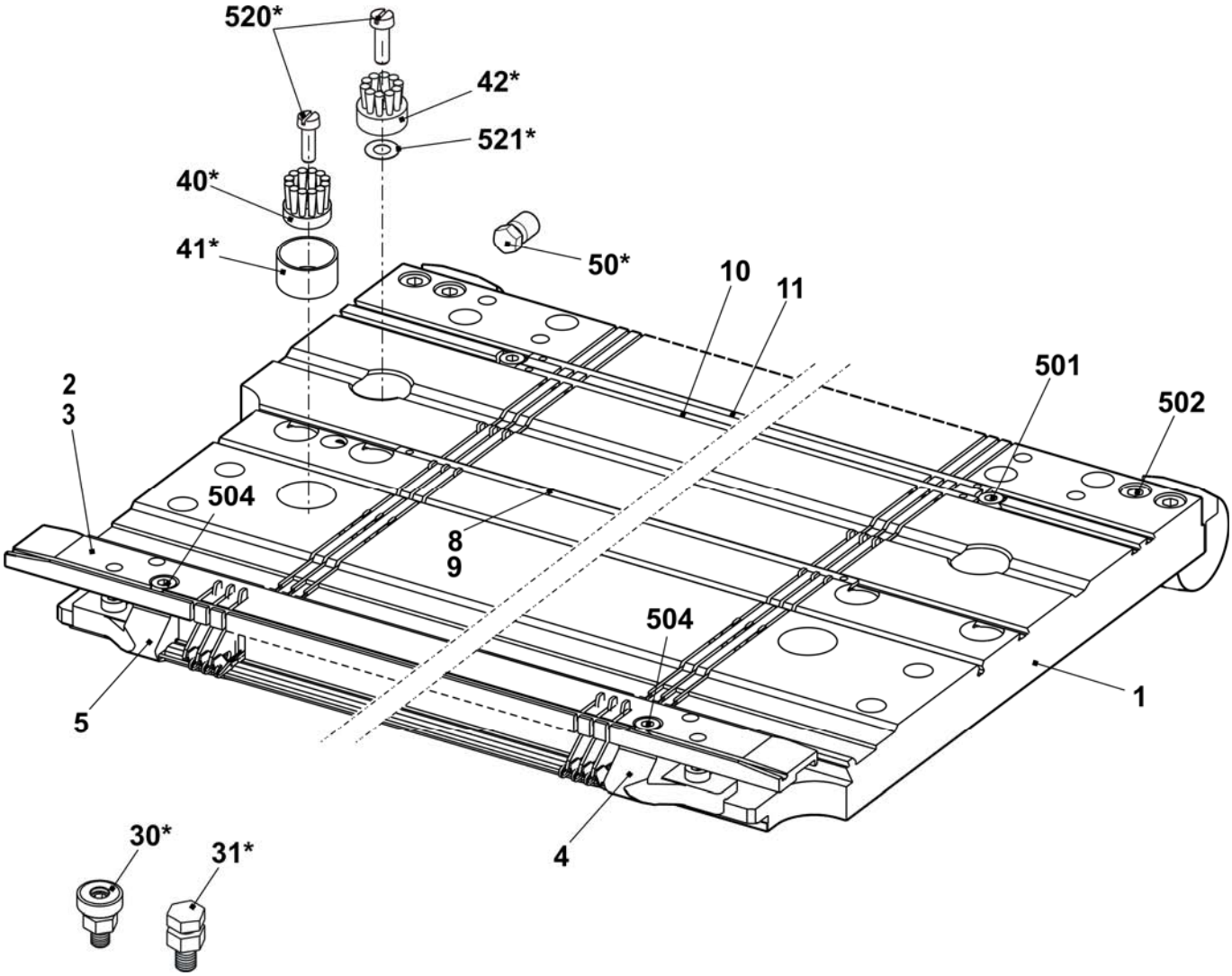

Needle bed E7m.8

Pos	Designation	ID		Pos	Designation	ID
Σ	**Needle bed co. at the front + rear E7**	**238 244**		16	Needle rail on the left	205 311
2	Spring steel wire E7-8 Ø0.8	227 078		17	Needle rail on the right	205 312
3	Spring steel wire Ø2.0	223 854		18	Needle rail in the middle	237 387
4a	Needle E8 with round hook	208 745		503	Cap screw M5x8-8.8	023 154
4b	Coupling part E4-E8	200 682		505	Cap screw M5x8	023 379
6	Intermediate slider with brake E5-E8	237 323		506	Set screw M6x12-45	022 400
7a	Selection jack E4-E8	200 687		507	Sprung thrust piece B-M10	023 177
7b	Selector spring E4-E8	200 690		509	Shim 0.02x18.5x34	023 194
10	Knock-over bit E7	207 055		510	Shim 0.03x18.5x34	023 195
11	Holding-down jack E7	205 032		511	Shim 0.05x18.5x34	023 196
12	Fixed wire Ø2.8	223 862		512	Shim 0.1x18.5x34	023 197
13	Support	206 352		513	Shim 0.2x18.5x34	023 253

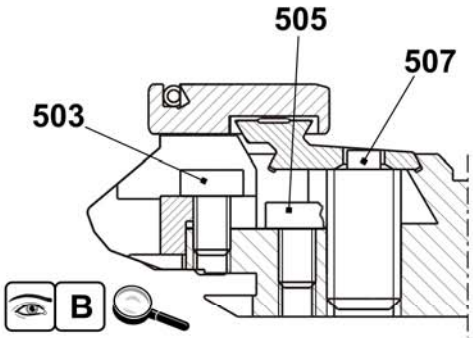

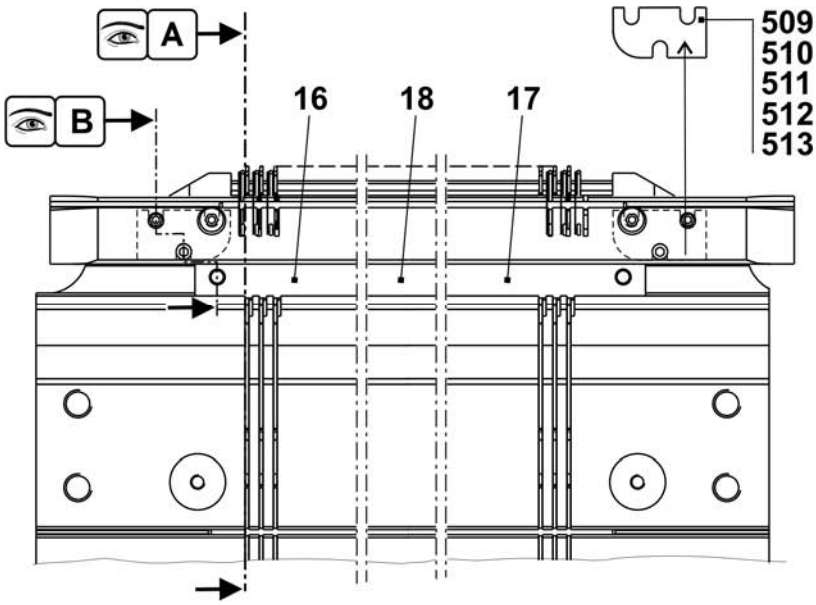

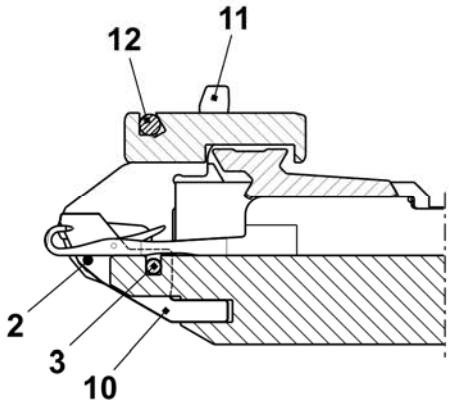

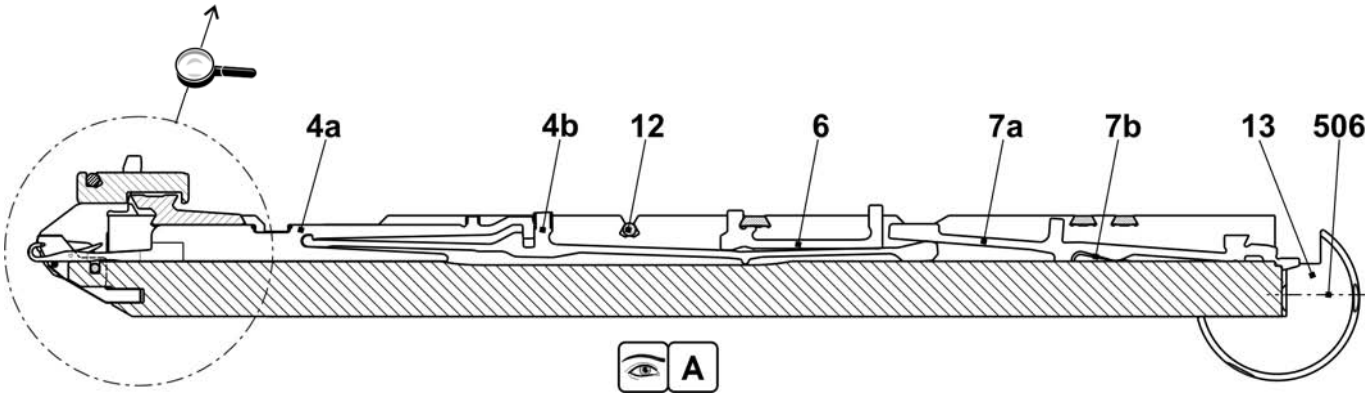

Continuation needle bed E7m.8

Pos	Designation	ID		Pos	Designation	ID
Σ	**Needle bed co. at the front + rear E7m.8**	**238 244**				
1	Needle bed at the front + rear E7	238 006		502	Cap screw M6x25	020 137
2	Holding-down jack bed at the rear E7	238 028		504	Cap screw M5x22	023 193
3	Holding-down jack bed at the front E7	238 022		30*	Adjusting piece	206 375
4	Limiter on the left E4-E8	205 343		31*	Set screw co.	207 712
5	Limiter on the right E4-E8	205 344		40*	Disk brush	235 612
8	Cover rail at the rear	237 379		41*	Container, plate brush	233 012
9	Cover rail at the front E3,5.2	238 018		42*	Disk brush	235 612
10	Cover rail	237 382		50*	Adjusting bolt	240 765
11	Cover rail	237 383		520*	Cap screw M5x12	020 032
501	Cap screw M5x10	022 918		521*	Adjusting washer P6x12x0.3	023 540

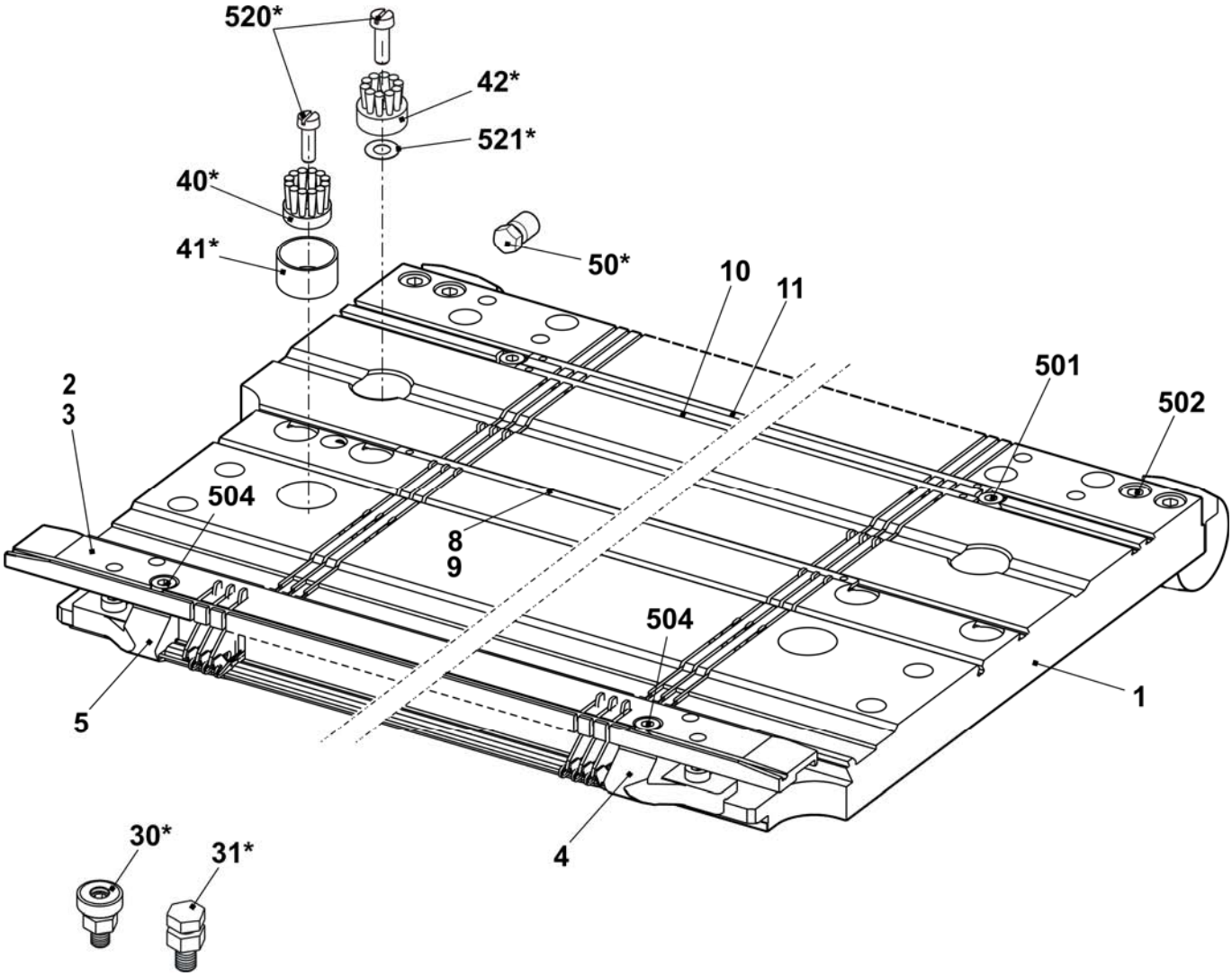

Needle bed E8m.7

Pos	Designation	ID		Pos	Designation	ID
Σ	**Needle bed co. at the front + rear E8m.7**	**238 245**		16	Needle rail on the left	205 311
2	Spring steel wire E7-8 Ø0.8	227 078		17	Needle rail on the right	205 312
3	Spring steel wire Ø2.0	223 854		18	Needle rail in the middle	237 387
4a	Needle E7 with round hook	205 397		503	Cap screw M5x8-8.8	023 154
4b	Coupling part E4-E8	200 682		505	Cap screw M5x8	023 379
6	Intermediate slider with brake E5-E8	237 323		506	Set screw M6x12-45	022 400
7a	Selection jack E4-E8	200 687		507	Sprung thrust piece B-M10	023 177
7b	Selector spring E4-E8	200 690		509	Shim 0.02x18.5x34	023 194
10	Knock-over bit E8	207 054		510	Shim 0.03x18.5x34	023 195
11	Holding-down jack E8	205 028		511	Shim 0.05x18.5x34	023 196
12	Fixed wire Ø2.8	223 862		512	Shim 0.1x18.5x34	023 197
13	Support	206 352		513	Shim 0.2x18.5x34	023 253

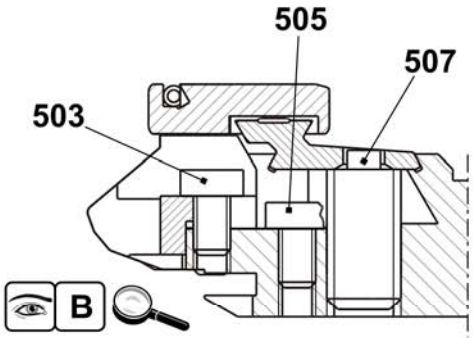

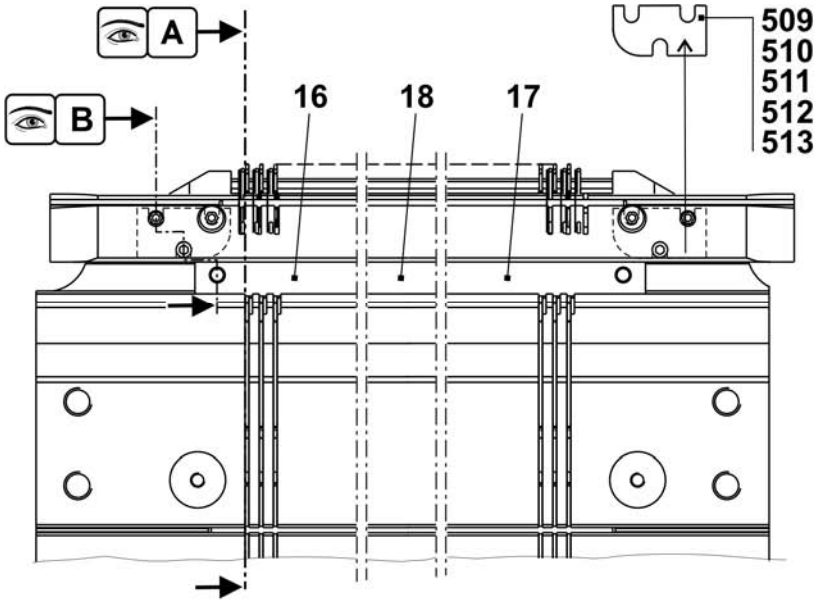

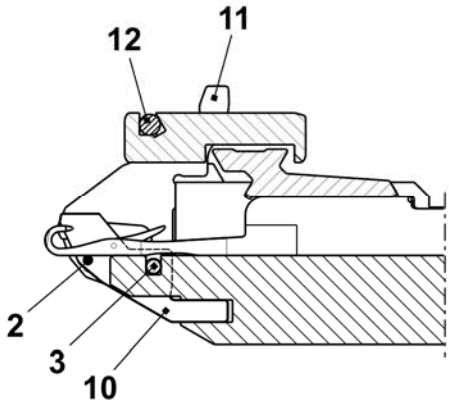

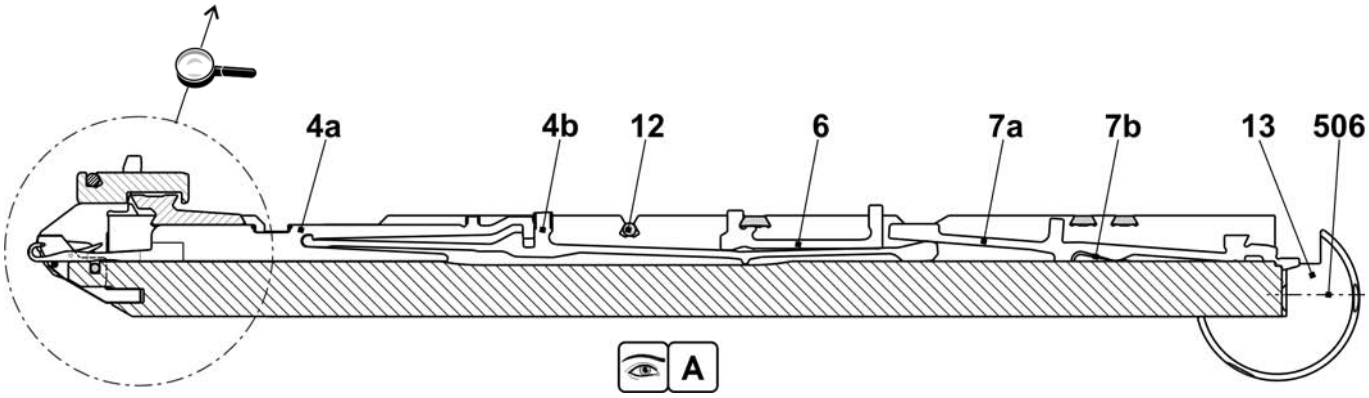

Continuation needle bed E8m.7

Pos	Designation	ID		Pos	Designation	ID
Σ	**Needle bed co. at the front + rear E8m.7**	**238 245**				
1	Needle bed at the front + rear E8	238 007		502	Cap screw M6x25	020 137
2	Holding-down jack bed at the rear E8	238 029		504	Cap screw M5x22	023 193
3	Holding-down jack bed at the front E8	238 023		30*	Adjusting piece	206 375
4	Limiter on the left E4-E8	205 343		31*	Set screw co.	207 712
5	Limiter on the right E4-E8	205 344		40*	Disk brush	235 612
8	Cover rail at the rear	237 379		41*	Container, plate brush	233 012
9	Cover rail at the front E8	238 015		42*	Disk brush	235 612
10	Cover rail	237 382		50*	Adjusting bolt	240 765
11	Cover rail	237 383		520*	Cap screw M5x12	020 032
501	Cap screw M5x10	022 918		521*	Adjusting washer P6x12x0.3	023 540

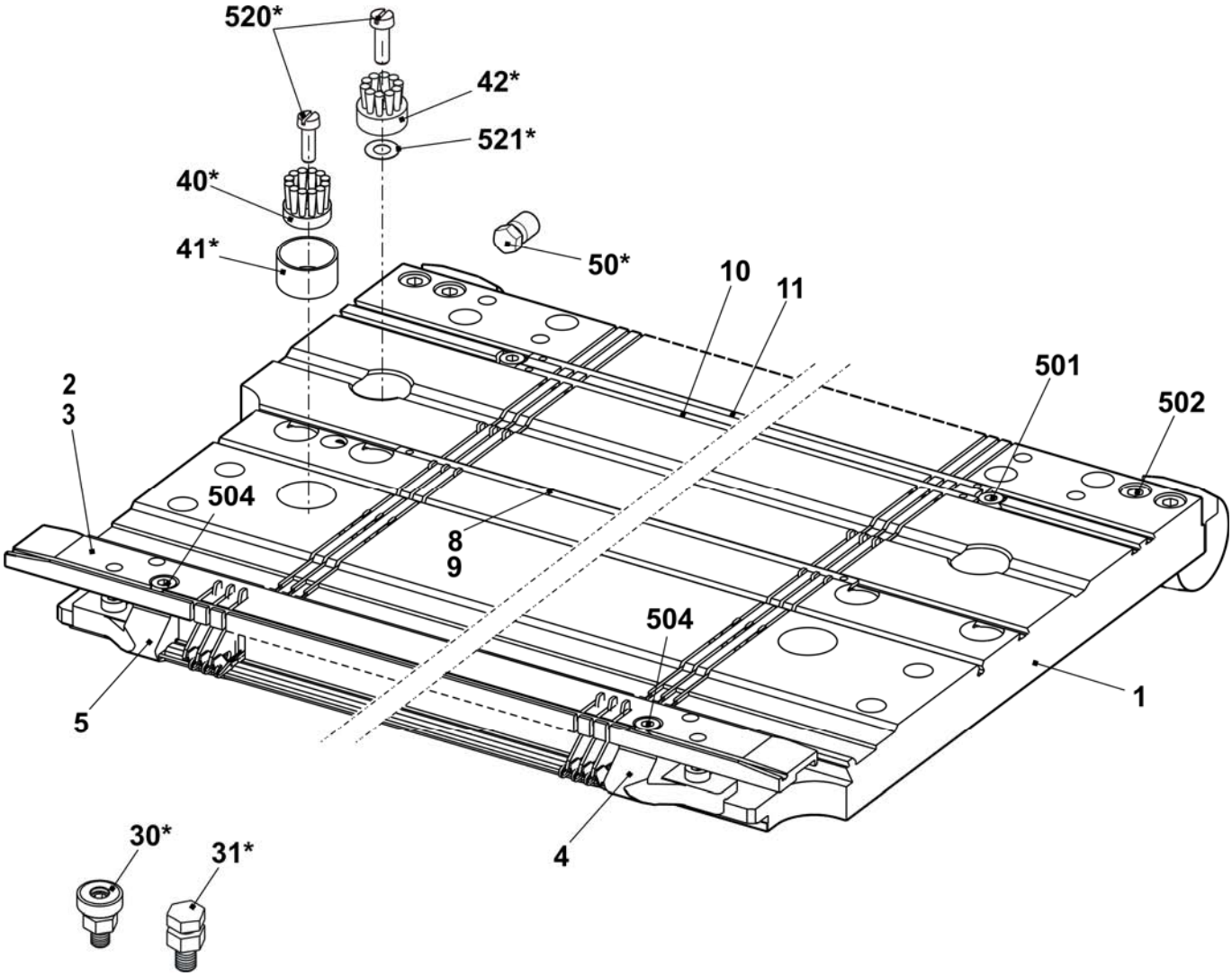

Needle bed E10m.12

Pos	Designation	ID		Pos	Designation	ID
Σ	**Needle bed co. at the front + rear E10m.12**	**241 681**		16	Needle rail on the left	205 311
2	Spring steel wire E10-14 Ø0.6	223 849		17	Needle rail on the right	205 312
3	Spring steel wire Ø2.0	223 854		18	Needle rail in the middle	237 387
4a	Needle E12	204 009		503	Cap screw M5x8-8.8	023 154
4b	Coupling part E10-12	200 683		505	Cap screw M5x8	023 379
6	Intermediate slider with brake E10	237 324		506	Set screw M6x12-45	022 400
7a	Selector spring E10-12	200 691		507	Sprung thrust piece B-M10	023 177
7b	Selection jack E10-12	200 688		509	Shim 0.02x18.5x34	023 194
10	Knock-over bit E10	239 756		510	Shim 0.03x18.5x34	023 195
11	Holding-down jack trick wall E10	239 815		511	Shim 0.05x18.5x34	023 196
12	Fixed wire Ø2.8	223 862		512	Shim 0.1x18.5x34	023 197
13	Support	206 352		513	Shim 0.2x18.5x34	023 253

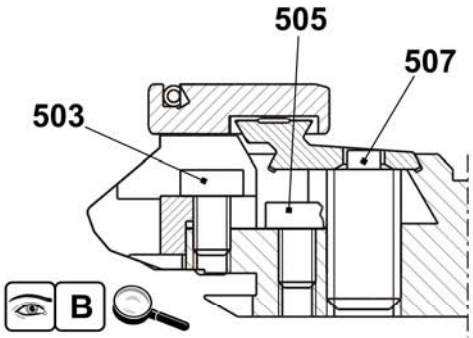

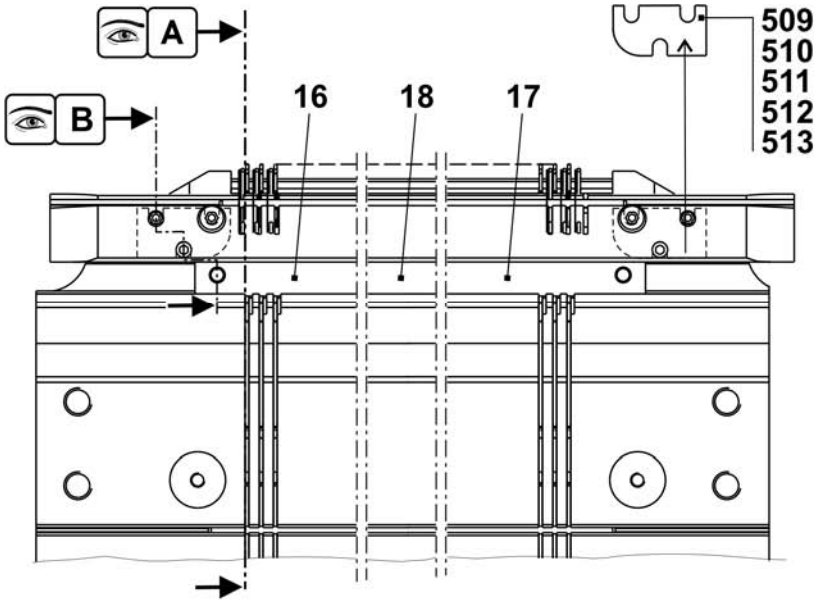

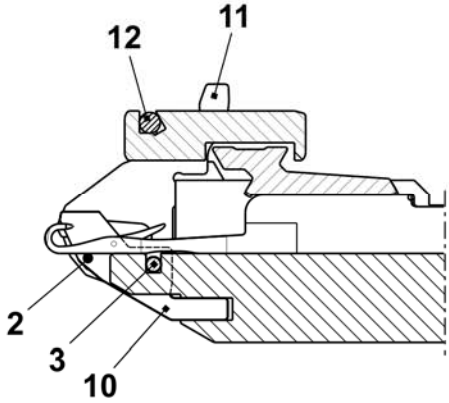

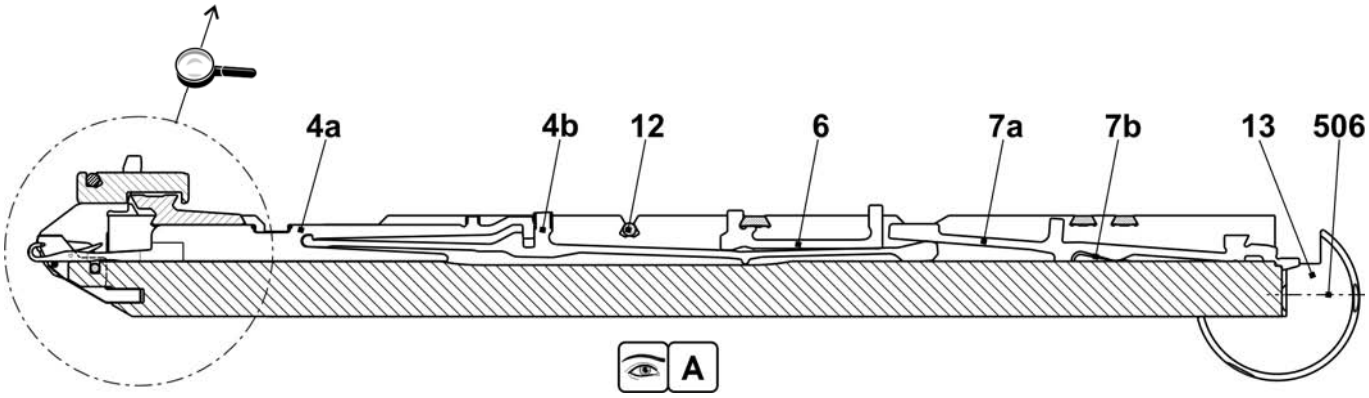

Continuation needle bed E10m.12

Pos	Designation	ID	Pos	Designation	ID
Σ	**Needle bed co. at the front + rear E10m.12**	**241 681**			
1	Needle bed at the front + rear E10	241 671	502	Cap screw M6x25	020 137
2	Holding-down jack bed at the rear E10	238 030	504	Cap screw M5x22	023 193
3	Holding-down jack bed at the front E10	238 024	30*	Adjusting piece	206 375
4	Limiter on the left E10-14	205 764	31*	Set screw co.	207 712
5	Limiter on the right E10-14	205 765	40*	Disk brush	235 612
8	Cover rail at the rear	237 379	41*	Container, plate brush	233 012
9	Cover rail at the front E5.2	237 506	42*	Disk brush	235 612
10	Cover rail	237 382	50*	Adjusting bolt	240 765
11	Cover rail	237 383	520*	Cap screw M5x12	020 032
501	Cap screw M5x10	022 918	521*	Adjusting washer P6x12x0.3	023 540

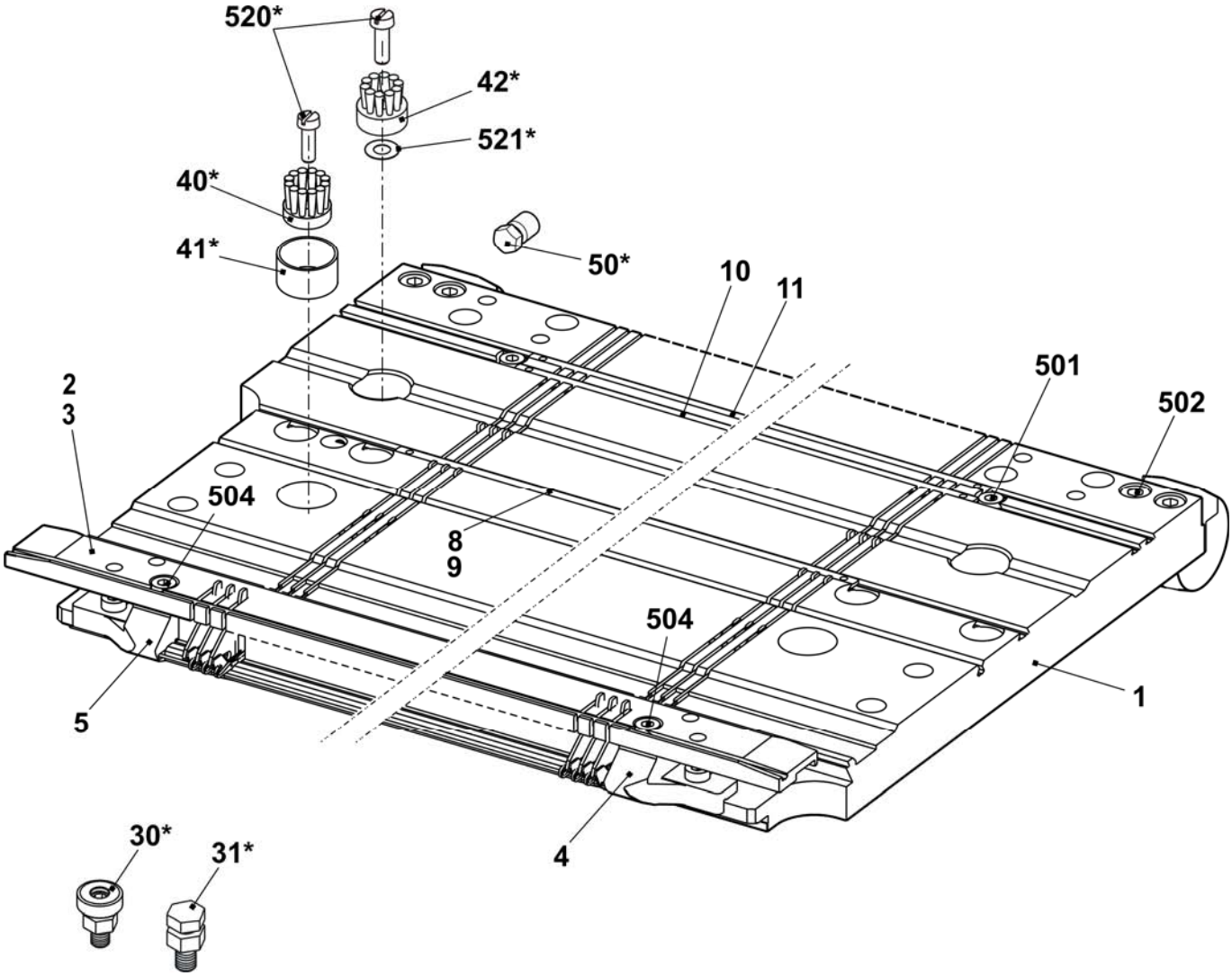

Needle bed E6.2 (12m.10)

Pos	Designation	ID		Pos	Designation	ID
Σ	**Needle bed co. at the front + rear E12m.10**	**253 413**		23	Needle rail on the left	205 311
4	Main trick wall E12	252 628		24	Needle rail on the right	205 312
6	Fixed wire Ø3.4	223 868		26	Support	206 352
7	Spring steel wire E10-14 Ø0.6	223 849		28	Needle rail in the middle	237 387
8	Spring steel wire Ø2	251 085		501	Cap screw M5x8-8.8 M	023 154
9a	Needle E10 with round hook	205 398		504	Cap screw M5x12-8.8	022 943
9b	Coupling part E10-12	200 683		506	Set screw M6x12-45	022 400
11	Intermediate slider with brake E10	237 324		507	Sprung thrust piece B-M10	023 177
12a	Selection jack E10-12	200 688		508	Shim 0.02x18.5x34	023 194
12b	Selector spring E10-12	200 691		509	Shim 0.03x18.5x34	023 195
13	Knock-over bit E12	205 013		510	Shim 0.05x18.5x34	023 196
14	Holding-down jack trick wall E12	227 821		511	Shim 0.1x18.5x34	023 197
21	Fixed wire Ø2.8	223 862		512	Shim 0.2x18.5x34	023 253

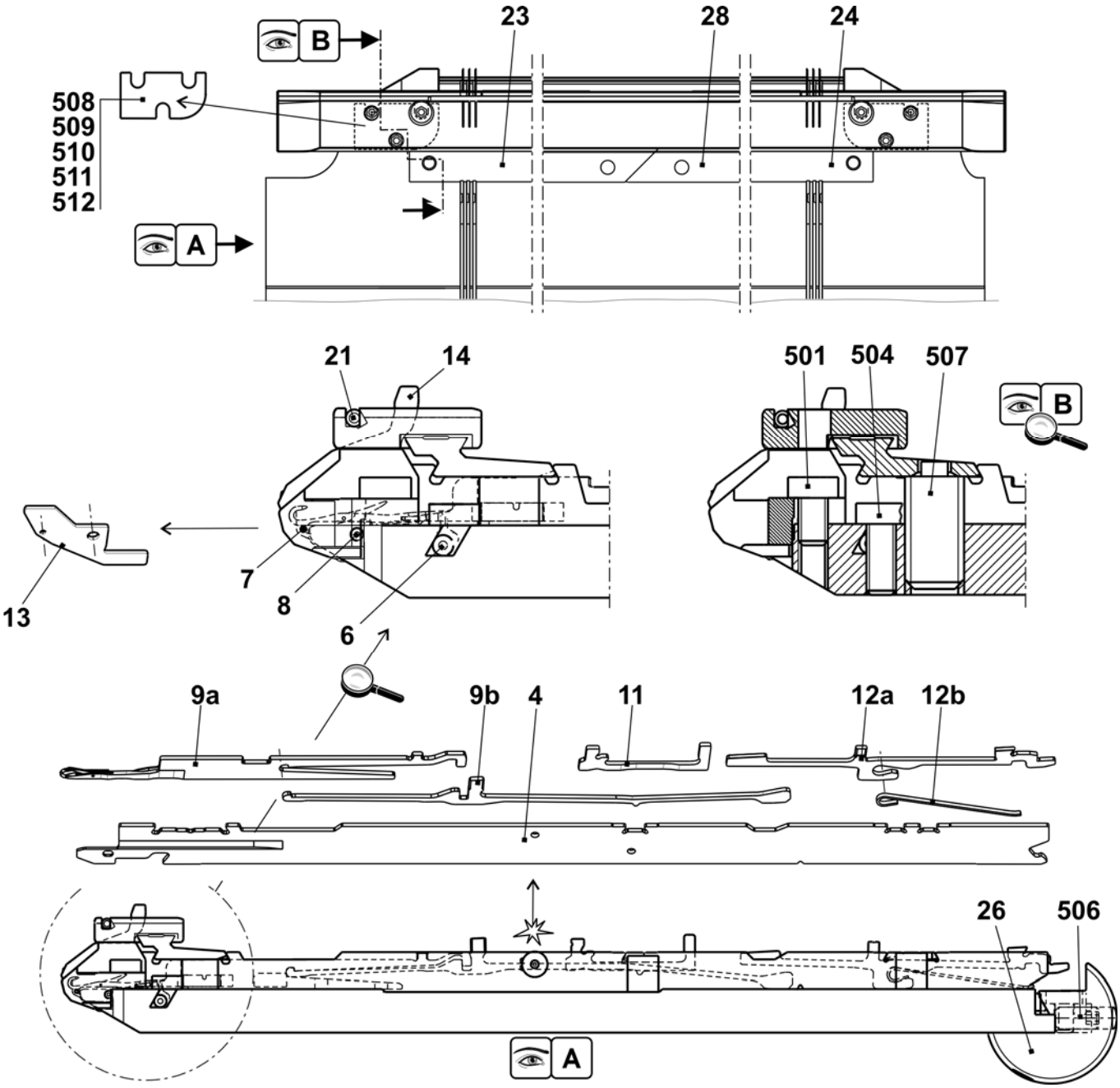

Continuation needle bed E6.2(12m.10)

Pos	Designation	ID		Pos	Designation	ID
Σ	**Needle bed co. at the front + rear E12m.10**	**253 413**		27	Stop screw	214 039
1	Needle bed at the front + rear E12 + E6.2	253 409		500	Cap screw M6x14	022 658
2	Holding-down jack bed at the front E12	238 025		502	Cap screw M5x8	023 379
3	Holding-down jack bed at the rear E12	238 031		503	Cap screw M5x22	023 193
5	Pressure slide	237 509		505	Set screw M3.5x3-1	020 512
8	Spring steel wire Ø2.0	251 085		30*	Adjusting piece	206 375
15	Limiter on the left E10-14	205 764		31*	Set screw co.	207 712
16	Limiter on the right E10-14	205 765		40*	Disk brush	235 612
17	Cover rail at the rear	237 379		41*	Container disk brush	233 012
18	Cover rail at the front E6.2	237 507		42*	Disk brush	235 612
19	Cover rail	237 382		50*	Adjusting bolt	240 765
20	Cover rail	237 383		520*	Cap screw M5x12	020 032
25	Bush	206 090		521*	Adjusting washer P6x12x0.3	023 540

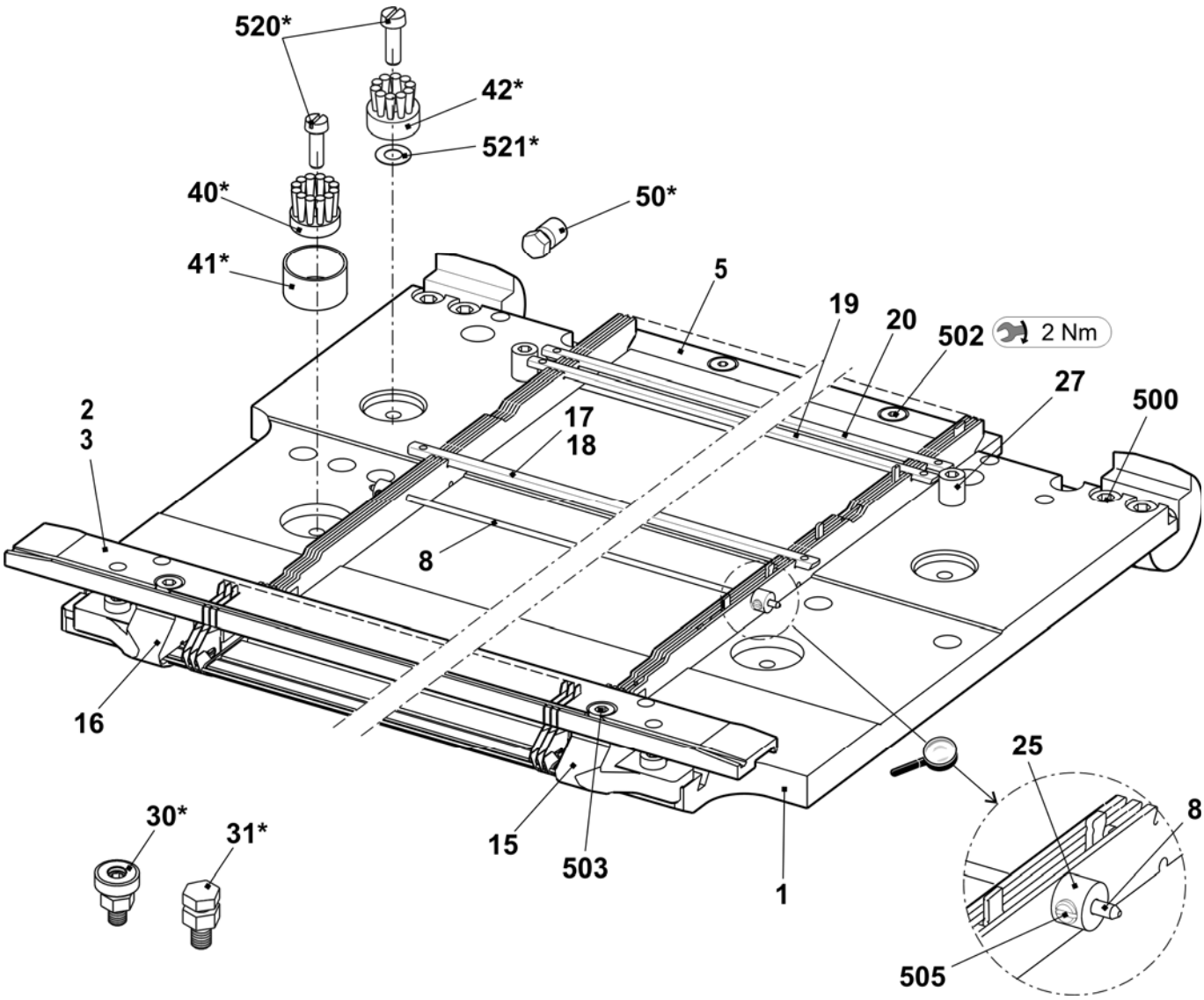

Needle bed E2,5.2 k&w

Pos	Designation	ID	Pos	Designation	ID
Σ	**Needle bed co. at the front + rear E2,5.2**	**238 220**	16	Needle rail on the left	205 311
2	Spring steel wire E4-5 Ø1.0	237 406	17	Needle rail on the right	205 312
3	Spring steel wire Ø2.0	223 854	18	Needle rail in the middle	237 387
4a	Needle E2,5.2-3,5.2	232 581	503	Cap screw M5x8-8.8	023 154
4b	Coupling part E4-E8	200 682	505	Cap screw M5x8	023 379
6	Intermediate slider with brake E5-E8	237 323	506	Set screw M6x12-45	022 400
7a	Selection jack E4-E8	200 687	507	Sprung thrust piece B-M10	023 177
7b	Selector spring E4-E8	200 690	509	Shim 0.02x18.5x34	023 194
10	Knock-over bit E5	204 996	510	Shim 0.03x18.5x34	023 195
11	Holding-down jack E5	205 031	511	Shim 0.05x18.5x34	023 196
12	Fixed wire Ø2.8	223 862	512	Shim 0.1x18.5x34	023 197
13	Support	206 352	513	Shim 0.2x18.5x34	023 253

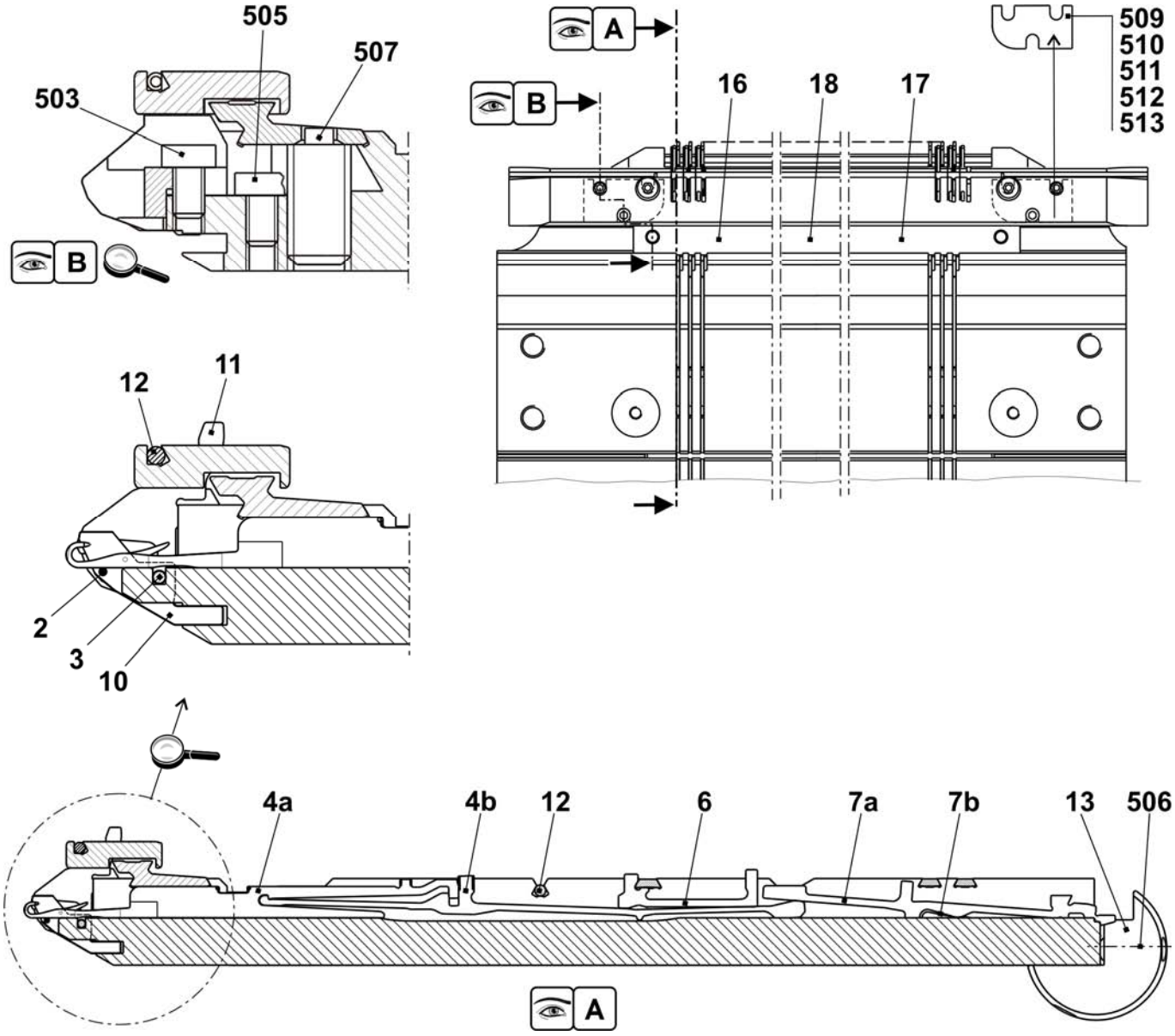

Continuation needle bed E2,5.2 k&w

Pos	Designation	ID	Pos	Designation	ID
Σ	**Needle bed co. at the front + rear E2,5.2**	**238 220**			
1	Needle bed at the front + rear E5	238 005	502	Cap screw M6x25	020 137
2	Holding-down jack bed at the rear E2,5.2 KW	237 497	504	Cap screw M5x22	023 193
3	Holding-down jack bed at the front E2,5.2 KW	237 489	30*	Adjusting piece	206 375
4	Limiter on the left E4-E8	205 343	31*	Set screw co.	207 712
5	Limiter on the right E4-E8	205 344	40*	Disk brush	235 612
8	Cover rail at the rear	237 379	41*	Container, plate brush	233 012
9	Cover rail at the front	237 377	42*	Disk brush	235 612
10	Cover rail	237 382	50*	Adjusting bolt	240 765
11	Cover rail	237 383	520*	Cap screw M5x12	020 032
501	Cap screw M5x10	022 918	521*	Adjusting washer P6x12x0.3	023 540

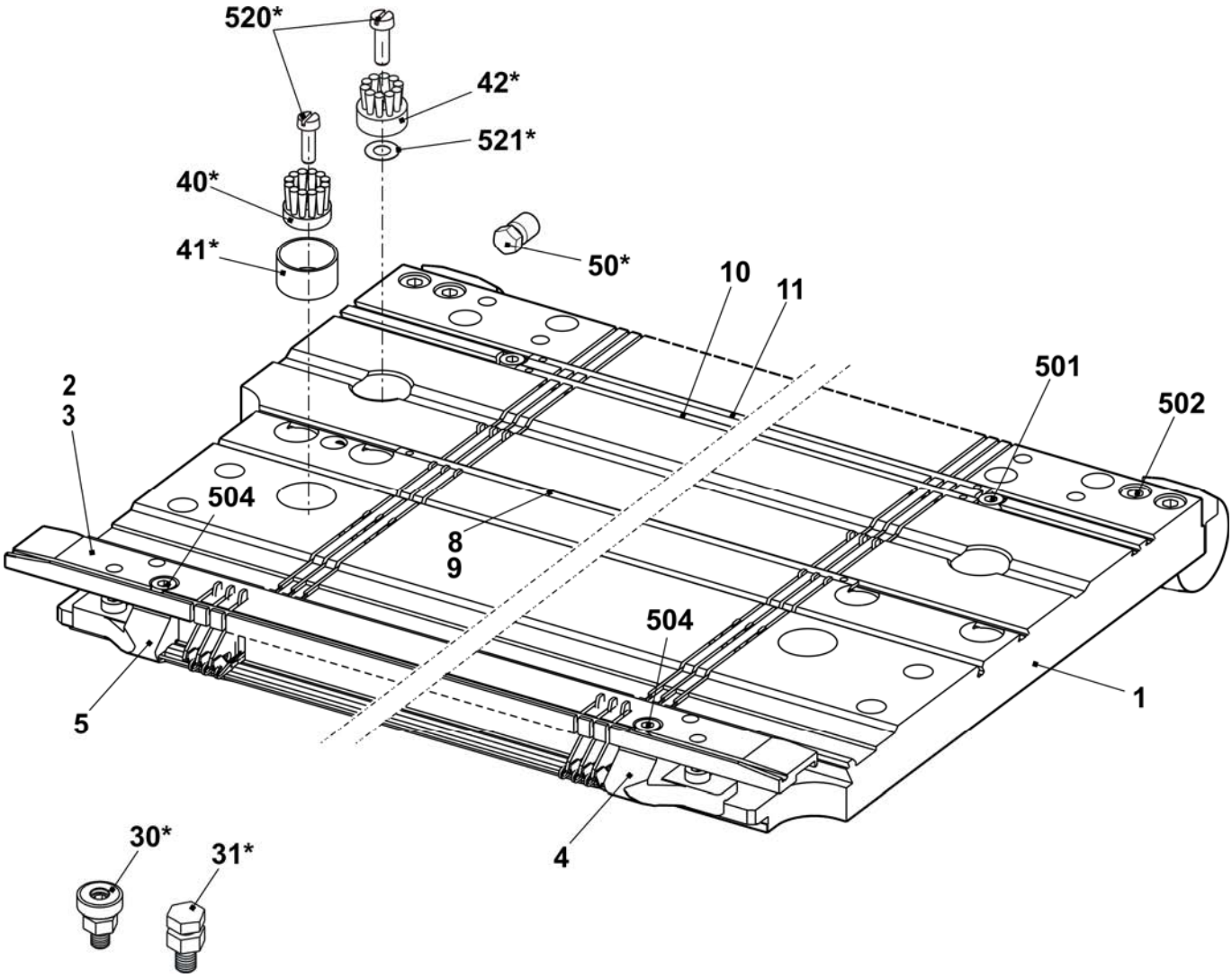

Needle bed E3,5.2 k&w

Pos	Designation	ID		Pos	Designation	ID
Σ	**Needle bed co. at the front + rear E3,5.2**	**238 221**		16	Needle rail on the left	205 311
2	Spring steel wire E4-5 Ø1.0	237 406		17	Needle rail on the right	205 312
3	Spring steel wire Ø2.0	223 854		18	Needle rail in the middle	237 387
4a	Needle E2,5.2-3,5.2	232 581		503	Cap screw M5x8-8.8	023 154
4b	Coupling part E4-E8	200 682		505	Cap screw M5x8	023 379
6	Intermediate slider with brake E5-E8	237 323		506	Set screw M6x12-45	022 400
7a	Selection jack E4-E8	200 687		507	Sprung thrust piece B-M10	023 177
7b	Selector spring E4-E8	200 690		509	Shim 0.02x18.5x34	023 194
10	Knock-over bit E3,5.2	229 034		510	Shim 0.03x18.5x34	023 195
11	Holding-down jack breast	229 032		511	Shim 0.05x18.5x34	023 196
12	Fixed wire Ø2.8	223 862		512	Shim 0.1x18.5x34	023 197
13	Support	206 352		513	Shim 0.2x18.5x34	023 253

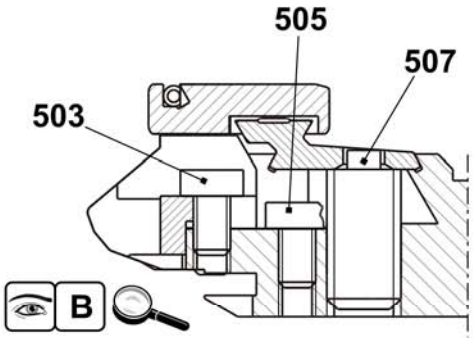

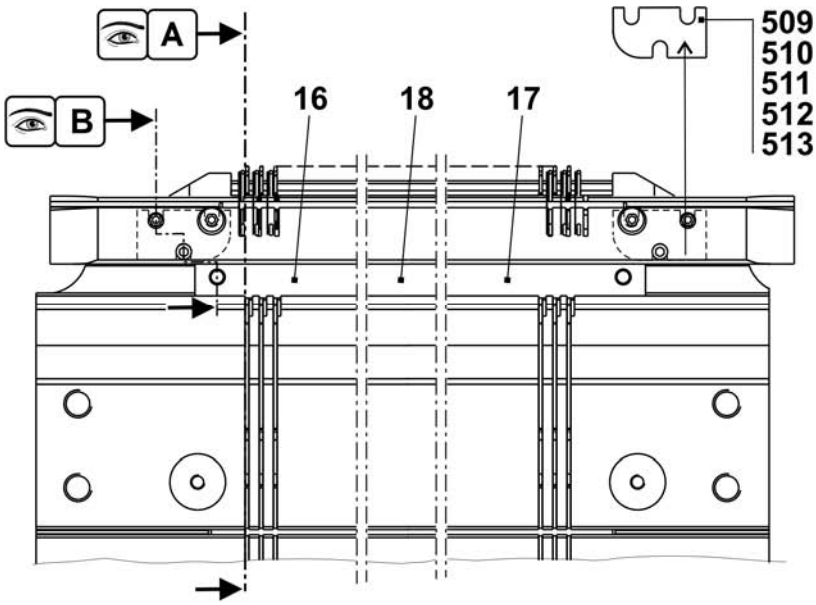

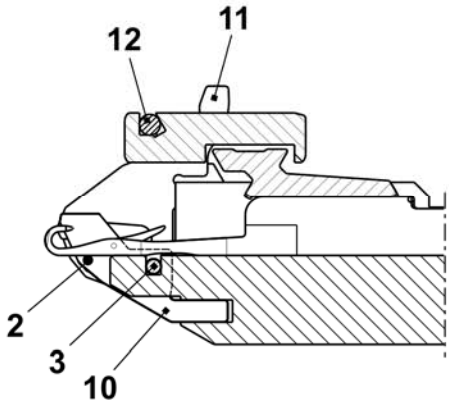

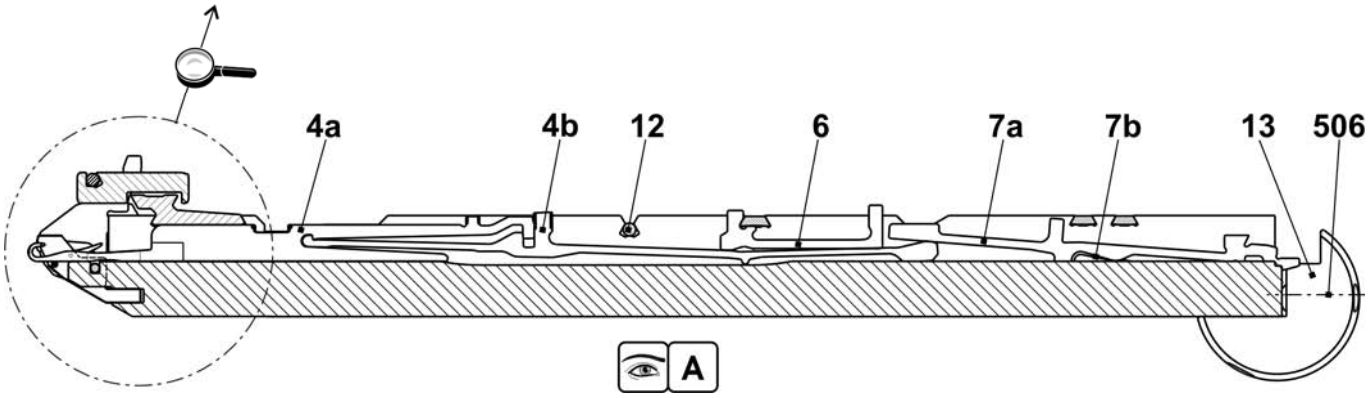

Continuation needle bed E3,5.2 k&w

Pos	Designation	ID	Pos	Designation	ID
Σ	**Needle bed co. at the front + rear E3,5.2**	**238 221**			
1	Needle bed at the front + rear E7	238 006	502	Cap screw M6x25	020 137
2	Holding-down jack bed at the rear E3,5.2	237 498	504	Cap screw M5x22	023 193
3	Holding-down jack bed at the front E3,5.2	237 490	30*	Adjusting piece	206 375
4	Limiter on the left E4-E8	205 343	31*	Set screw co.	207 712
5	Limiter on the right E4-E8	205 344	40*	Disk brush	235 612
8	Cover rail at the rear	237 379	41*	Container, plate brush	233 012
9	Cover rail at the front E3,5.2	238 018	42*	Disk brush	235 612
10	Cover rail	237 382	50*	Adjusting bolt	240 765
11	Cover rail	237 383	520*	Cap screw M5x12	020 032
501	Cap screw M5x10	022 918	521*	Adjusting washer P6x12x0.3	023 540

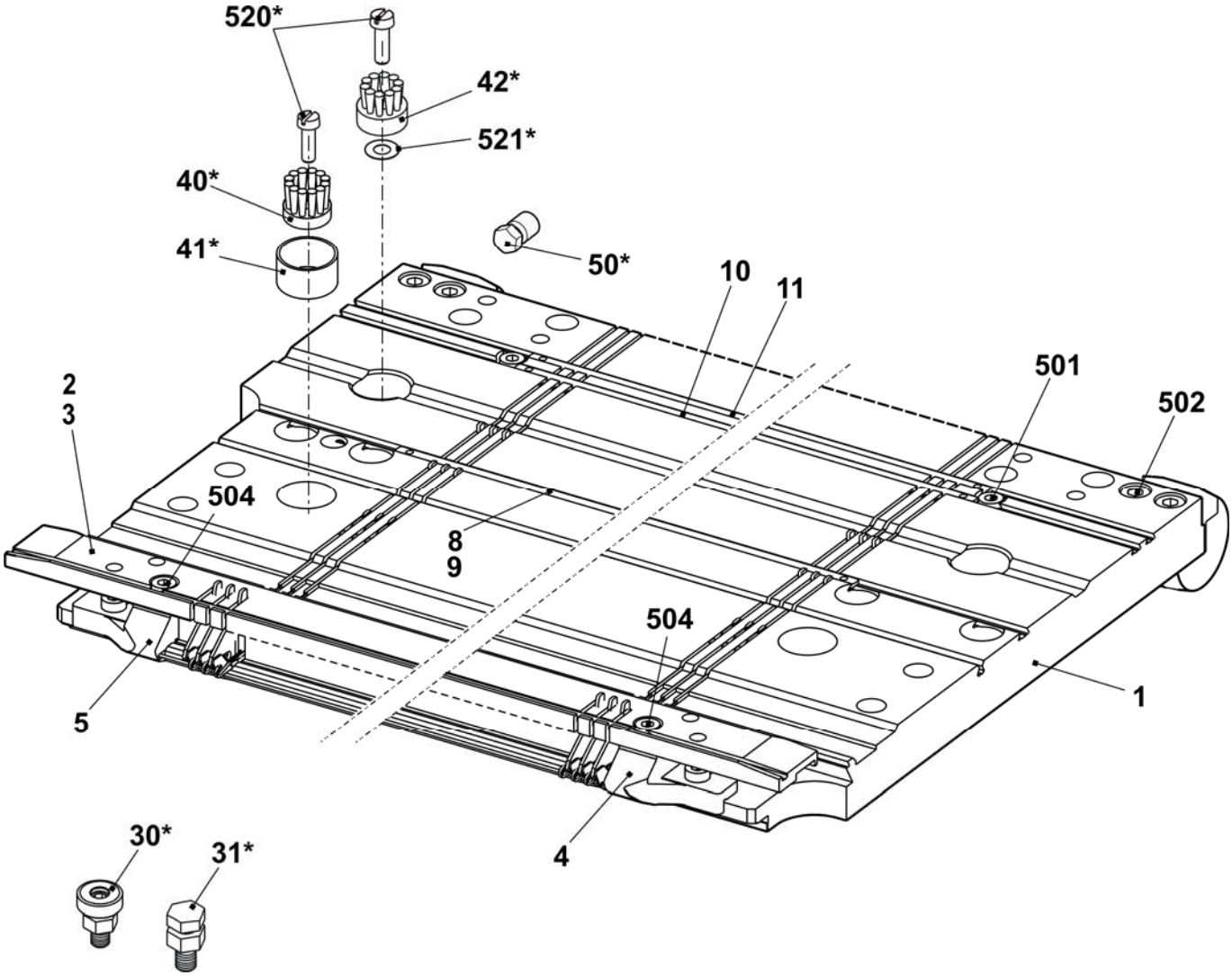

Needle bed E5.2 k&w

Pos	Designation	ID		Pos	Designation	ID
Σ	**Needle bed co. at the front + rear E5.2**	**237 513**		23	Needle rail on the left	205 311
4	Main trick wall E5.2	219 171		24	Needle rail on the right	205 312
6	Fixed wire Ø3.4	223 868		26	Support	206 352
7	Spring steel wire E4-5 Ø1.0	237 406		28	Needle rail in the middle	237 387
9a	Needle E5.2 vosa special 110.118-86	219 181		501	Cap screw M5x8-8.8 M	023 154
9b	Coupling part E5.2	219 188		504	Cap screw M5x12-8.8	022 943
11	Intermediate slider with brake E5.2	236 030		506	Set screw M6x12-45	022 400
12a	Selection jack E5.2	219 214		507	Sprung thrust piece B-M10	023 177
12b	Selector spring E5.2	219 265		508	Shim 0.02x18.5x34	023 194
13	Knock-over bit E5.2	221 367		509	Shim 0.03x18.5x34	023 195
14	Holding-down jack breast E5.2	229 832		510	Shim 0.05x18.5x34	023 196
21	Fixed wire Ø2.8	223 862		511	Shim 0.1x18.5x34	023 197
22	Spring steel wire Ø1.95	223 852		512	Shim 0.2x18.5x34	023 253

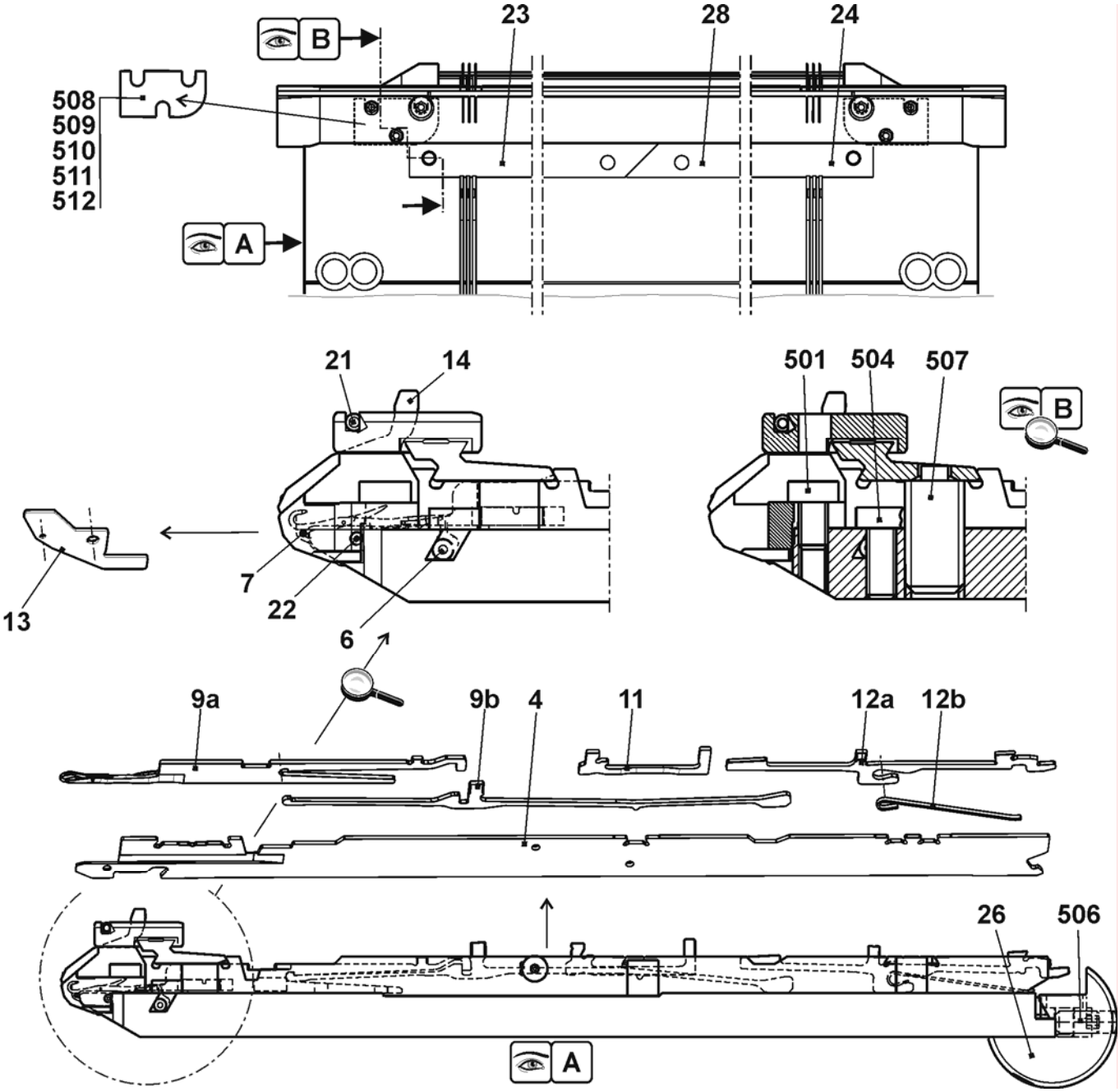

Continuation needle bed E5.2 k&w

Pos	Designation	ID	Pos	Designation	ID
Σ	**Needle bed co. at the front + rear E5.2**	**237 513**	27	Stop screw	214 039
1	Needle bed at the front + rear E5.2	237 484	500	Cap screw M6x14	022 658
2	Holding-down jack bed at the front E5.2	237 491	502	Cap screw M5x8	023 379
3	Holding-down jack bed at the rear E5.2	237 499	503	Cap screw M5x22	023 193
5	Pressure slide	237 509	505	Set screw M3.5x3-1	020 512
8	Spring steel wire Ø2.0	223 854	30*	Adjusting piece	206 375
15	Limiter on the left E4-E8	205 343	31*	Set screw co.	207 712
16	Limiter on the right E4-E8	205 344	40*	Disk brush	235 612
17	Cover rail at the rear	237 379	41*	Container disk brush	233 012
18	Cover rail at the front E5.2	237 506	42*	Disk brush	235 612
19	Cover rail	237 382	50*	Adjusting bolt	240 765
20	Cover rail	237 383	520*	Cap screw M5x12	020 032
25	Bush	206 090	521*	Adjusting washer P6x12x0.3	023 540

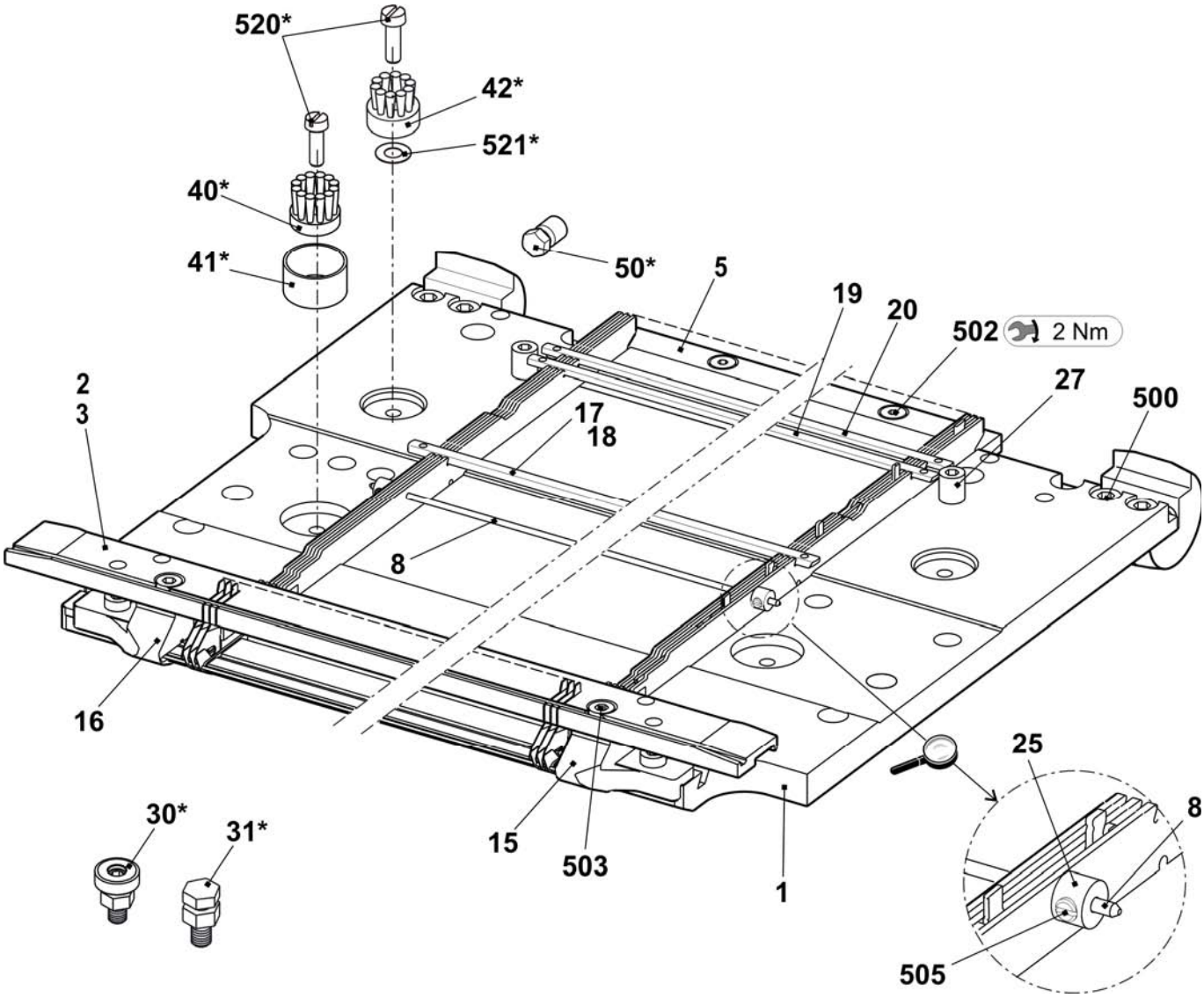

Needle bed E6.2 k&w

Pos	Designation	ID		Pos	Designation	ID
Σ	**Needle bed co. at the front + rear E6.2**	**253 414**		23	Needle rail on the left	205 311
4	Main trick wall E12	252 628		24	Needle rail on the right	205 312
6	Fixed wire Ø3.4	223 868		26	Support	206 352
7	Spring steel wire E10-14 Ø0.6	223 849		28	Needle rail in the middle	237 387
8	Spring steel wire Ø2	251 085		501	Cap screw M5x8	023 154
9a	Needle E6.2	207 349		504	Cap screw M5x12	022 943
9b	Coupling part E10-12	200 683		506	Set screw M6x12-45	022 400
11	Intermediate slider with brake E10	237 324		507	Sprung thrust piece B-M10	023 177
12a	Selection jack E10-12	200 688		508	Shim 0.02x18.5x34	023 194
12b	Selector spring E10-12	200 691		509	Shim 0.03x18.5x34	023 195
13	Knock-over bit E6.2	237 863		510	Shim 0.05x18.5x34	023 196
14	Holding-down jack E6.2	237 852		511	Shim 0.1x18.5x34	023 197
21	Fixed wire Ø2.8	223 862		512	Shim 0.2x18.5x34	023 253

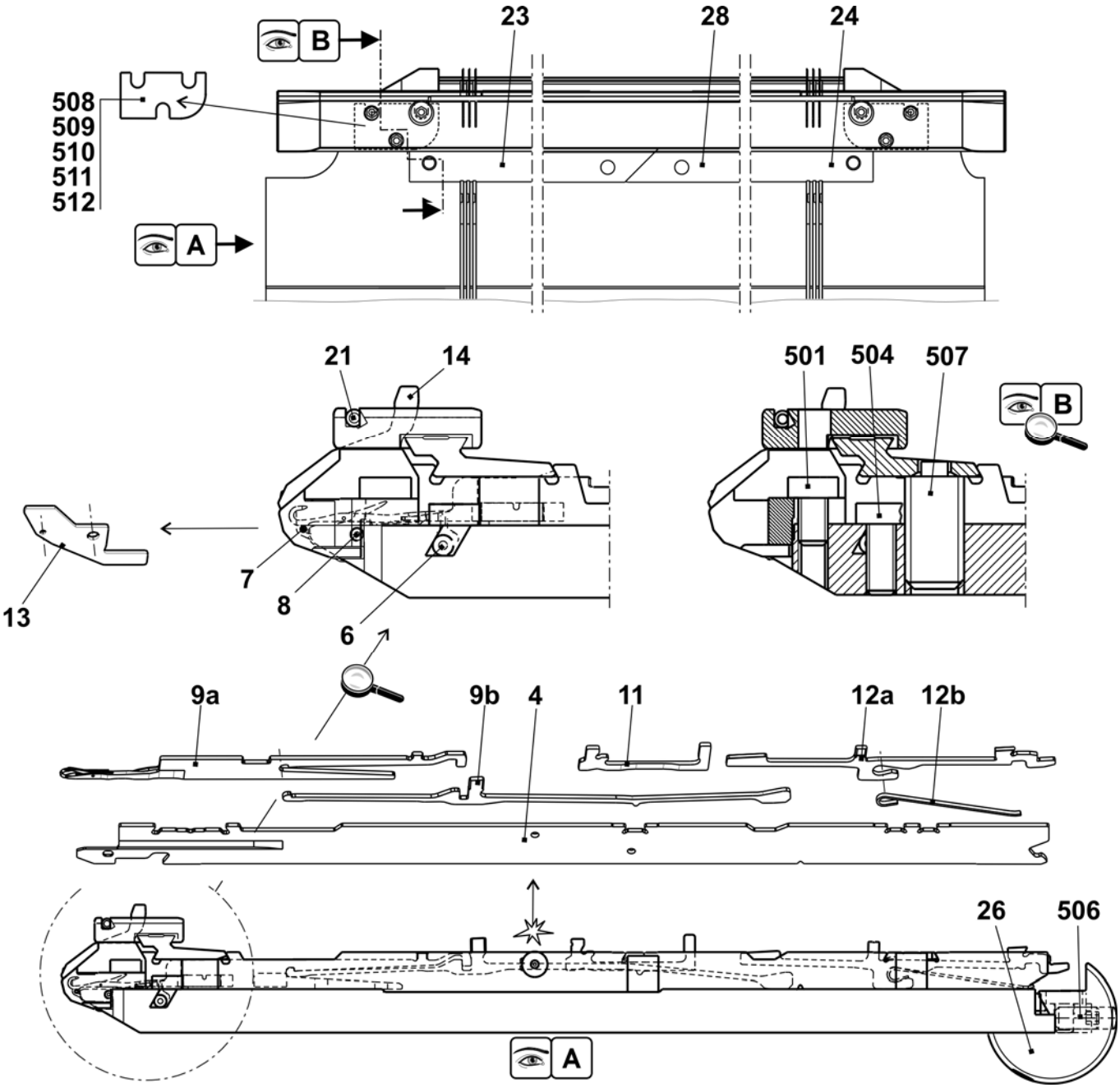

Continuation needle bed E6.2 k&w

Pos	Designation	ID	Pos	Designation	ID
Σ	**Needle bed co. at the front + rear E6.2**	**253 414**	27	Stop screw	214 039
1	Needle bed at the front + rear E12 + E6.2	253 409	500	Cap screw M6x14	022 658
2	Holding-down jack bed at the front E6.2	237 492	502	Cap screw M5x8	023 379
3	Holding-down jack bed at the rear E6.2	237 500	503	Cap screw M5x22	023 193
5	Pressure slide	237 509	505	Set screw M3.5x3-1	020 512
8	Spring steel wire Ø2.0	251 085	30*	Adjusting piece	206 375
15	Limiter on the left E10-14	205 764	31*	Set screw co.	207 712
16	Limiter on the right E10-14	205 765	40*	Disk brush	235 612
17	Cover rail at the rear	237 379	41*	Container disk brush	233 012
18	Cover rail at the front E6.2	237 507	42*	Disk brush	235 612
19	Cover rail	237 382	50*	Adjusting bolt	240 765
20	Cover rail	237 383	520*	Cap screw M5x12	020 032
25	Bush	206 090	521*	Adjusting washer P6x12x0.3	023 540

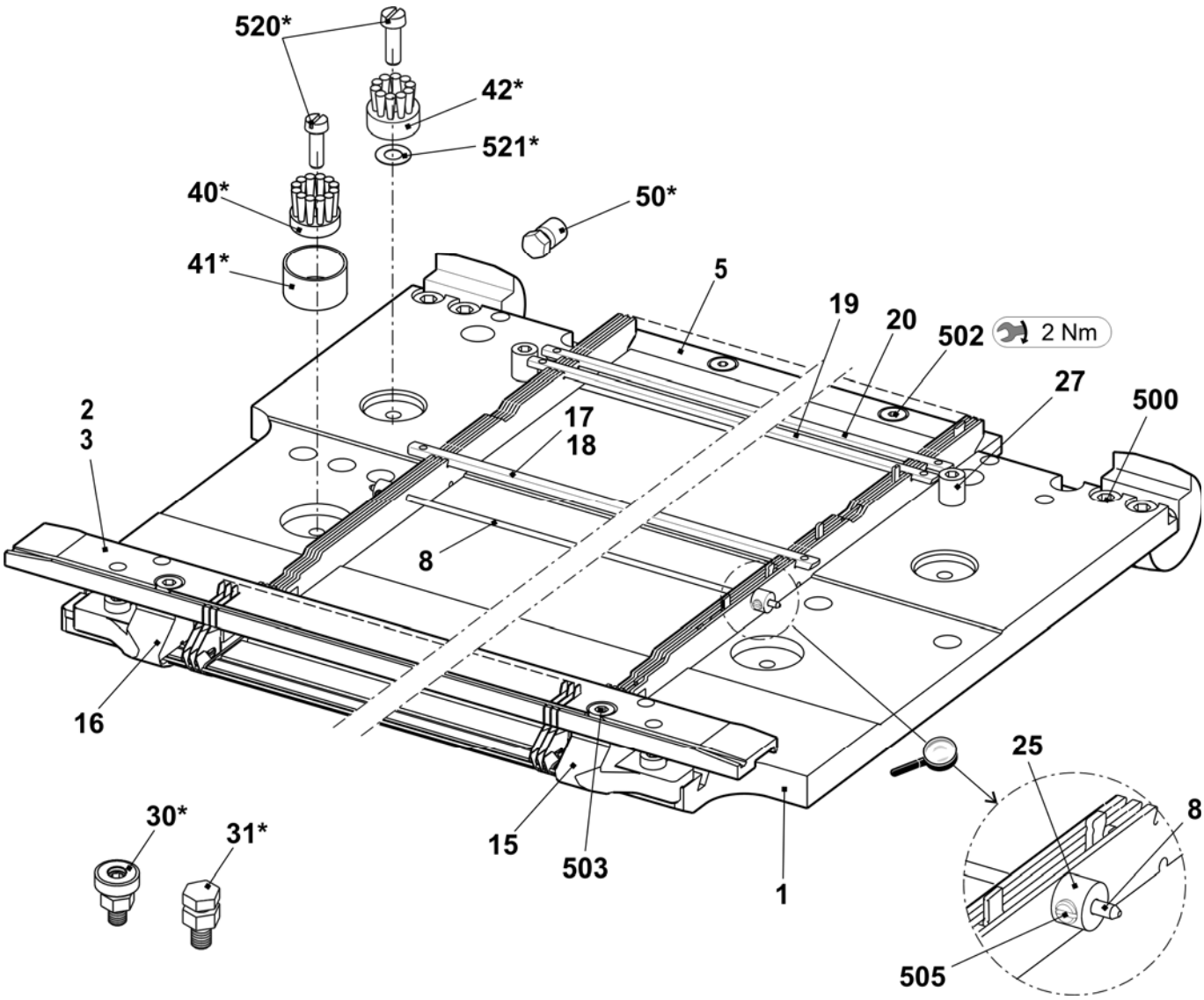

Needle bed E7.2 k&w

Pos	Designation	ID	Pos	Designation	ID
Σ	**Needle bed co. at the front + rear E7.2**	**253 415**			
4	Main trick wall E14	252 629	24	Needle rail on the right	205 312
6	Fixed wire Ø3.4	223 868	26	Support	206 352
7	Spring steel wire E10-14 Ø0.6	223 849	28	Needle rail in the middle	237 387
8	Spring steel wire Ø2	251 085	501	Cap screw M5x8-8.8 M	023 154
9a	Needle E7.2 vosa special 112.70-62	225 230	504	Cap screw M5x12-8.8	022 943
9b	Coupling part E14	209 633	506	Set screw M6x12-45	022 400
11	Intermediate slider with brake E14	237 373	507	Sprung thrust piece B-M10	023 177
12	Selection jack with spring E14	224 725	508	Shim 0.02x18.5x34	023 194
13	Knock-over bit E7.2	234 903	509	Shim 0.03x18.5x34	023 195
14	Holding-down jack E7.2	236 954	510	Shim 0.05x18.5x34	023 196
21	Fixed wire Ø2.8	223 862	511	Shim 0.1x18.5x34	023 197
23	Needle rail on the left	205 311	512	Shim 0.2x18.5x34	023 253

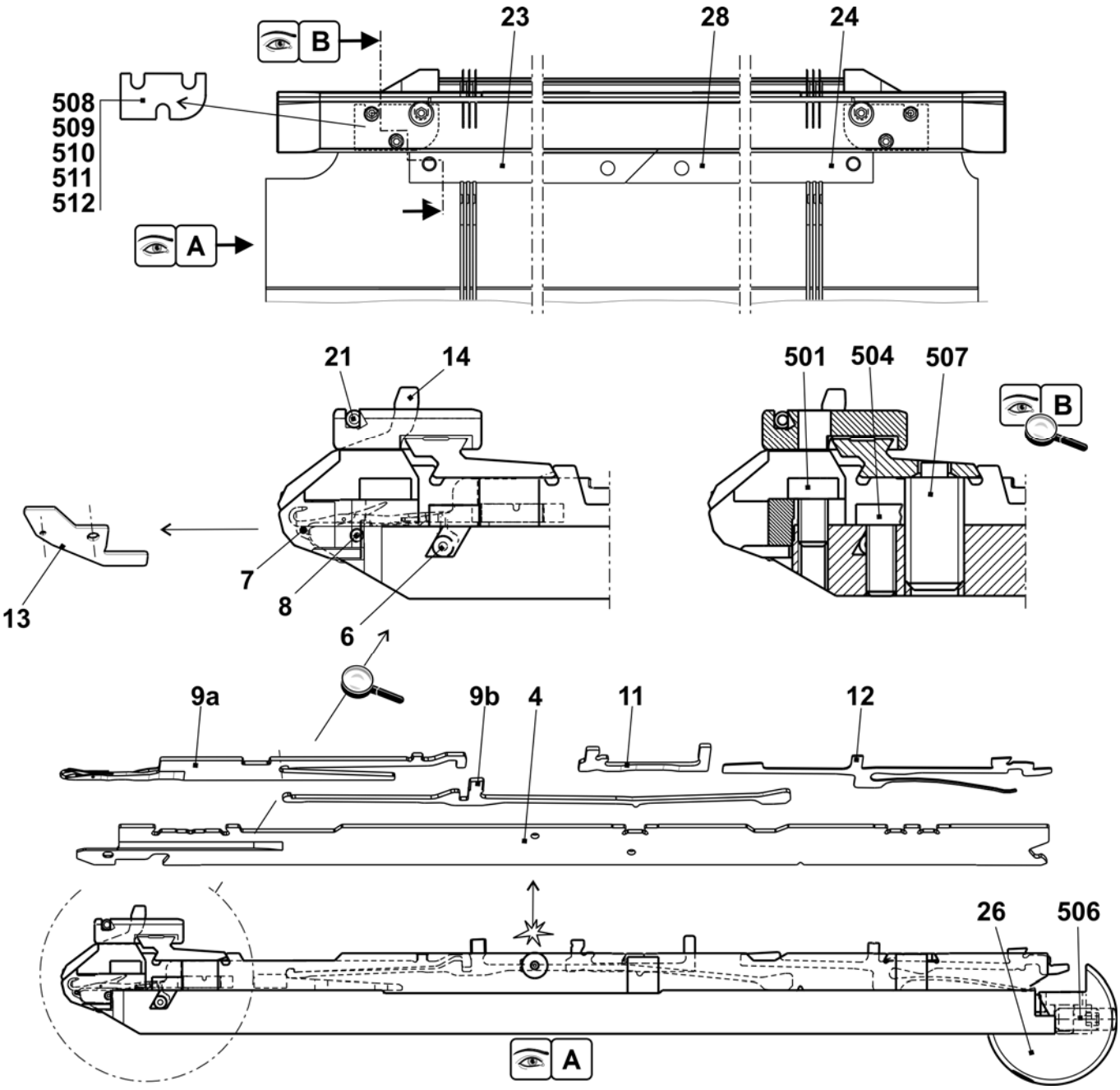

Continuation needle bed E7.2 k&w

Pos	Designation	ID	Pos	Designation	ID
Σ	**Needle bed co. at the front + rear E7.2**	**253 415**	27	Stop screw	214 039
1	Needle bed at the front + rear E7.2	253 410	500	Cap screw M6x14	022 658
2	Holding-down jack bed at the front E7.2	237 493	502	Cap screw M5x8	023 379
3	Holding-down jack bed at the rear E7.2	237 501	503	Cap screw M5x22	023 193
5	Pressure slide	237 509	505	Set screw M3.5x3-1	020 512
8	Spring steel wire Ø2.0	251 085	30*	Adjusting piece	206 375
15	Limiter on the left E10-14	205 764	31*	Set screw co.	207 712
16	Limiter on the right E10-14	205 765	40*	Disk brush	235 612
17	Cover rail at the rear	237 379	41*	Container disk brush	233 012
18	Cover rail at the front E7.2	237 508	42*	Disk brush	235 612
19	Cover rail	237 382	50*	Adjusting bolt	240 765
20	Cover rail	237 383	520*	Cap screw M5x12	020 032
25	Bush	206 090	521*	Adjusting washer P6x12x0.3	023 540

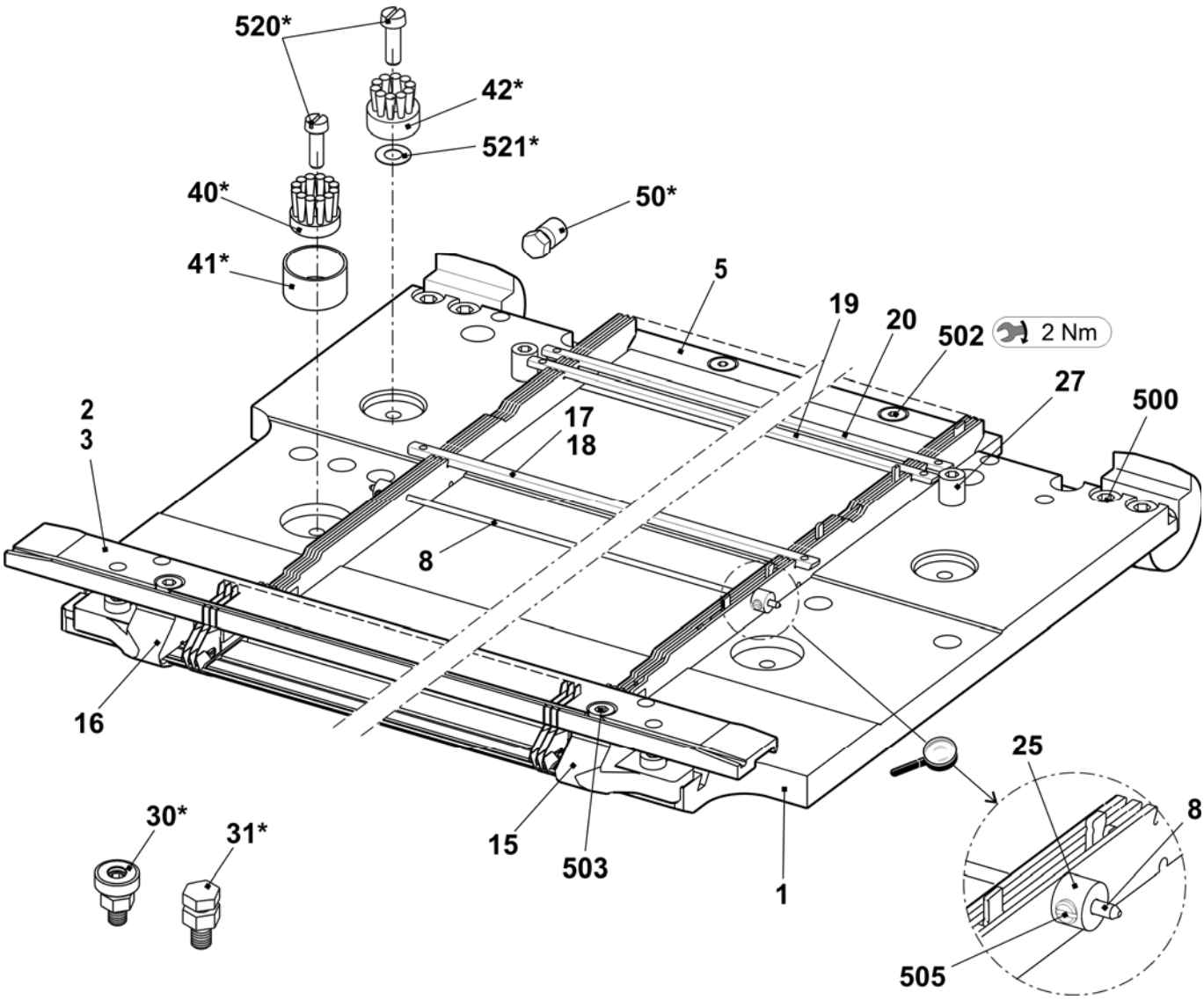

Needle bed E2,5.2 mg

Pos	Designation	ID	Pos	Designation	ID
Σ	**Needle bed co. at the front + rear E2,5.2**	**239 227**	16	Needle rail on the left	205 311
2	Spring steel wire E4-5 Ø1.0	237 406	17	Needle rail on the right	205 312
3	Spring steel wire Ø2.0	223 854	18	Needle rail in the middle	237 387
4a	Needle E2,5.2-3,5.2	232 581	503	Cap screw M5x8-8.8	023 154
4b	Coupling part E4-E8	200 682	505	Cap screw M5x8	023 379
6	Intermediate slider with brake E5-E8	237 323	506	Set screw M6x12-45	022 400
7a	Selection jack E4-E8	200 687	507	Sprung thrust piece B-M10	023 177
7b	Selector spring E4-E8	200 690	509	Shim 0.02x18.5x34	023 194
10	Knock-over bit E5	204 996	510	Shim 0.03x18.5x34	023 195
11	Holding-down jack E5	205 031	511	Shim 0.05x18.5x34	023 196
12	Fixed wire Ø2.8	223 862	512	Shim 0.1x18.5x34	023 197
13	Support	206 352	513	Shim 0.2x18.5x34	023 253

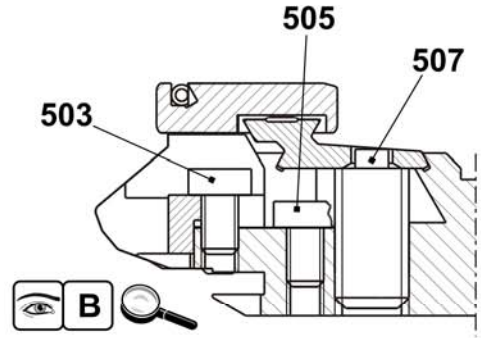

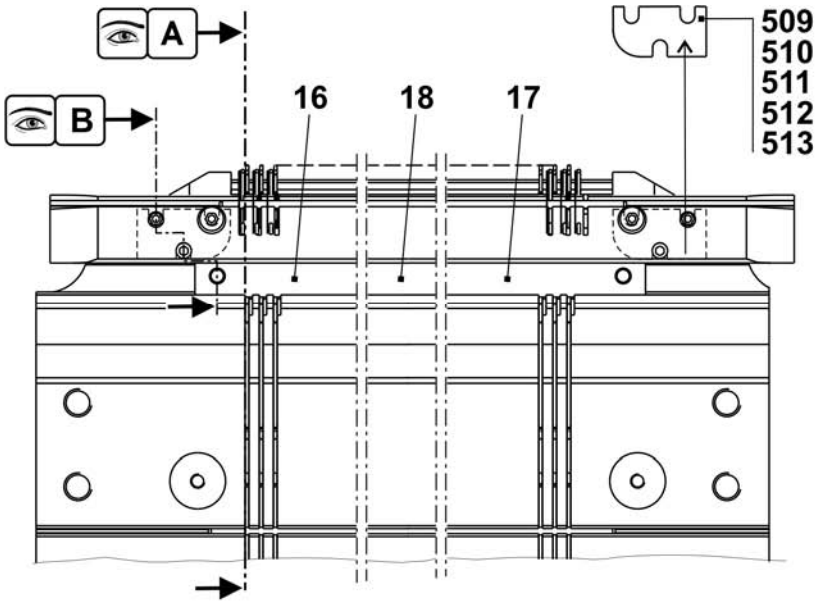

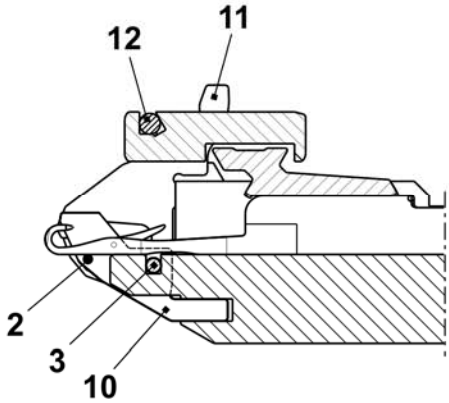

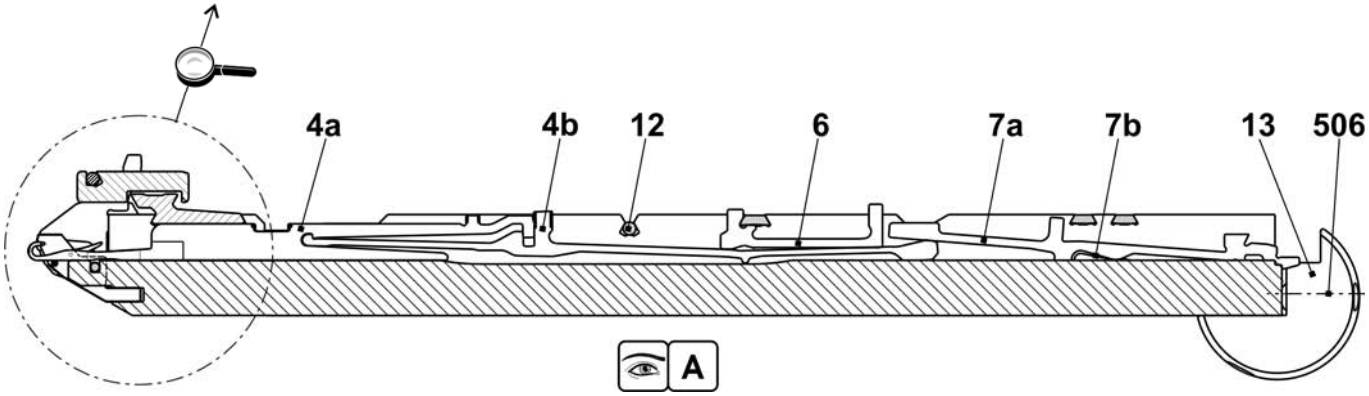

Continuation needle bed E2,5.2 mg

Pos	Designation	ID		Pos	Designation	ID
Σ	**Needle bed co. at the front + rear E2,5.2**	**239 227**				
1	Needle bed at the front + rear E5	238 005		502	Cap screw M6x25	020 137
2	Holding-down jack bed at the rear E2,5.2 MG	240 012		504	Cap screw M5x22	023 193
3	Holding-down jack bed at the front E2,5.2 MG	240 011		30*	Adjusting piece	206 375
4	Limiter on the left E4-E8	205 343		31*	Set screw co.	207 712
5	Limiter on the right E4-E8	205 344		40*	Disk brush	235 612
8	Cover rail at the rear	237 379		41*	Container, plate brush	233 012
9	Cover rail at the front E5	237 377		42*	Disk brush	235 612
10	Cover rail	237 382		50*	Adjusting bolt	240 765
11	Cover rail	237 383		520*	Cap screw M5x12	020 032
501	Cap screw M5x10	022 918		521*	Adjusting washer P6x12x0.3	023 540

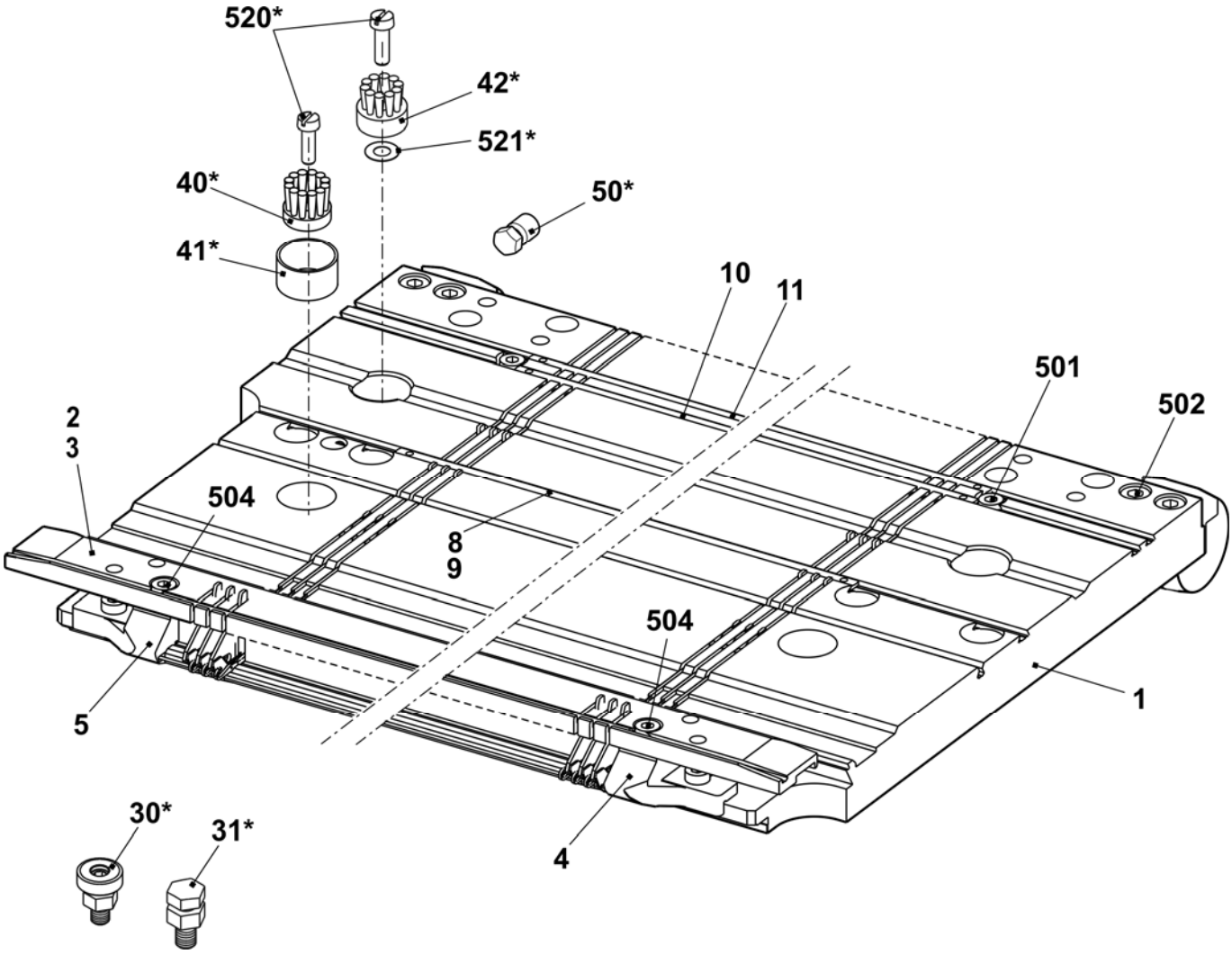

Needle bed E3,5.2 mg

Pos	Designation	ID		Pos	Designation	ID
Σ	**Needle bed co. at the front + rear E3,5.2**	**239 228**		16	Needle rail on the left	205 311
2	Spring steel wire E4-5 Ø1.0	237 406		17	Needle rail on the right	205 312
3	Spring steel wire Ø2.0	223 854		18	Needle rail in the middle	237 387
4a	Needle E2,5.2-3,5.2	232 581		503	Cap screw M5x8-8.8	023 154
4b	Coupling part E4-E8	200 682		505	Cap screw M5x8	023 379
6	Intermediate slider with brake E5-E8	237 323		506	Set screw M6x12-45	022 400
7a	Selection jack E4-E8	200 687		507	Sprung thrust piece B-M10	023 177
7b	Selector spring E4-E8	200 690		509	Shim 0.02x18.5x34	023 194
10	Knock-over bit E7	207 055		510	Shim 0.03x18.5x34	023 195
11	Holding-down jack E7	205 032		511	Shim 0.05x18.5x34	023 196
12	Fixed wire Ø2.8	223 862		512	Shim 0.1x18.5x34	023 197
13	Support	206 352		513	Shim 0.2x18.5x34	023 253

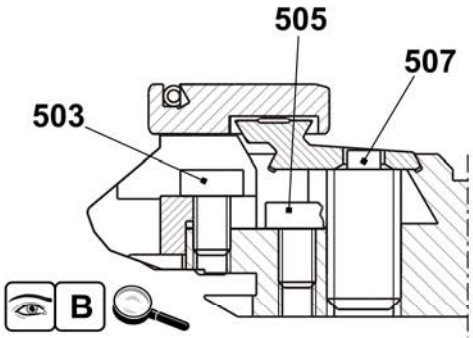

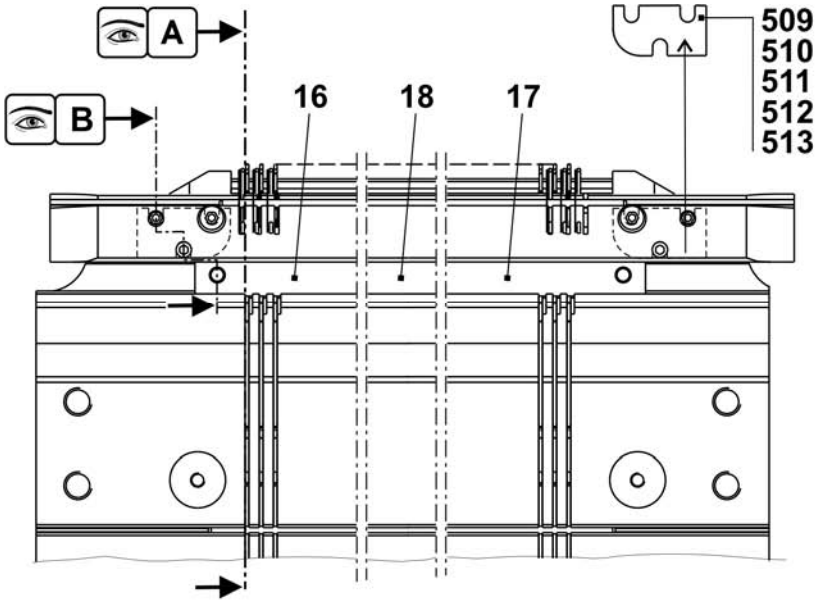

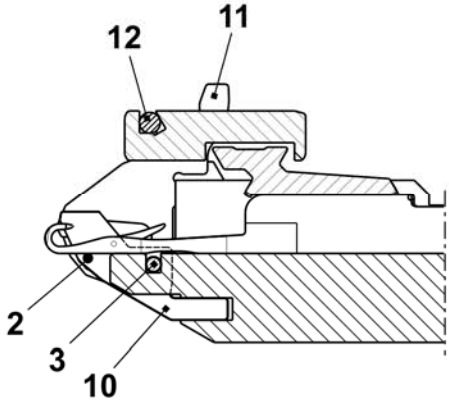

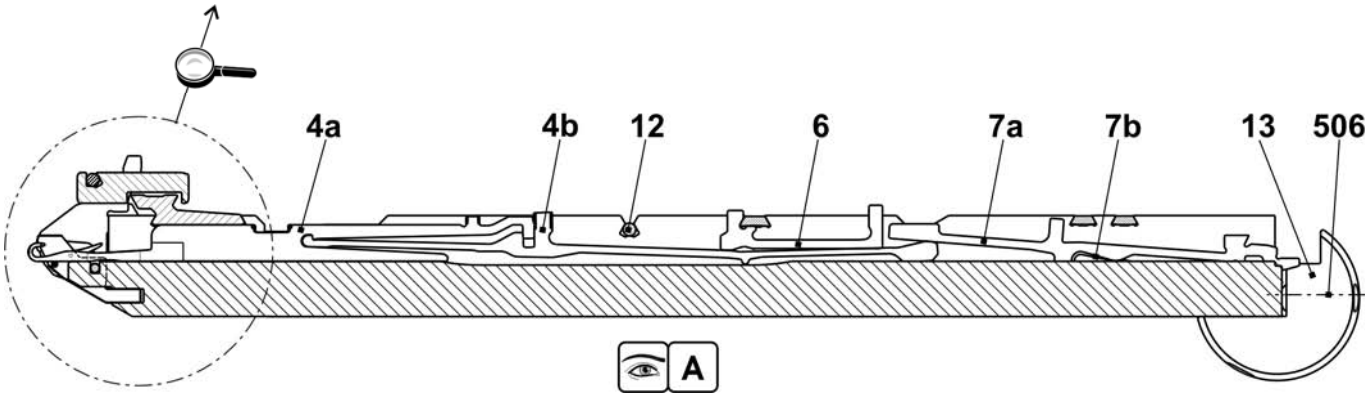

Continuation needle bed E3,5.2 mg

Pos	Designation	ID	Pos	Designation	ID
Σ	**Needle bed co. at the front + rear E3,5.2**	**239 228**			
1	Needle bed at the front + rear E7	238 006	502	Cap screw M6x25	020 137
2	Holding-down jack bed at the rear E3,5.2	237 498	504	Cap screw M5x22	023 193
3	Holding-down jack bed at the front E3,5.2	237 490	30*	Adjusting piece	206 375
4	Limiter on the left E4-E8	205 343	31*	Set screw co.	207 712
5	Limiter on the right E4-E8	205 344	40*	Disk brush	235 612
8	Cover rail at the rear	237 379	41*	Container, plate brush	233 012
9	Cover rail at the front E3,5.2	238 018	42*	Disk brush	235 612
10	Cover rail	237 382	50*	Adjusting bolt	240 765
11	Cover rail	237 383	520*	Cap screw M5x12	020 032
501	Cap screw M5x10	022 918	521*	Adjusting washer P6x12x0.3	023 540

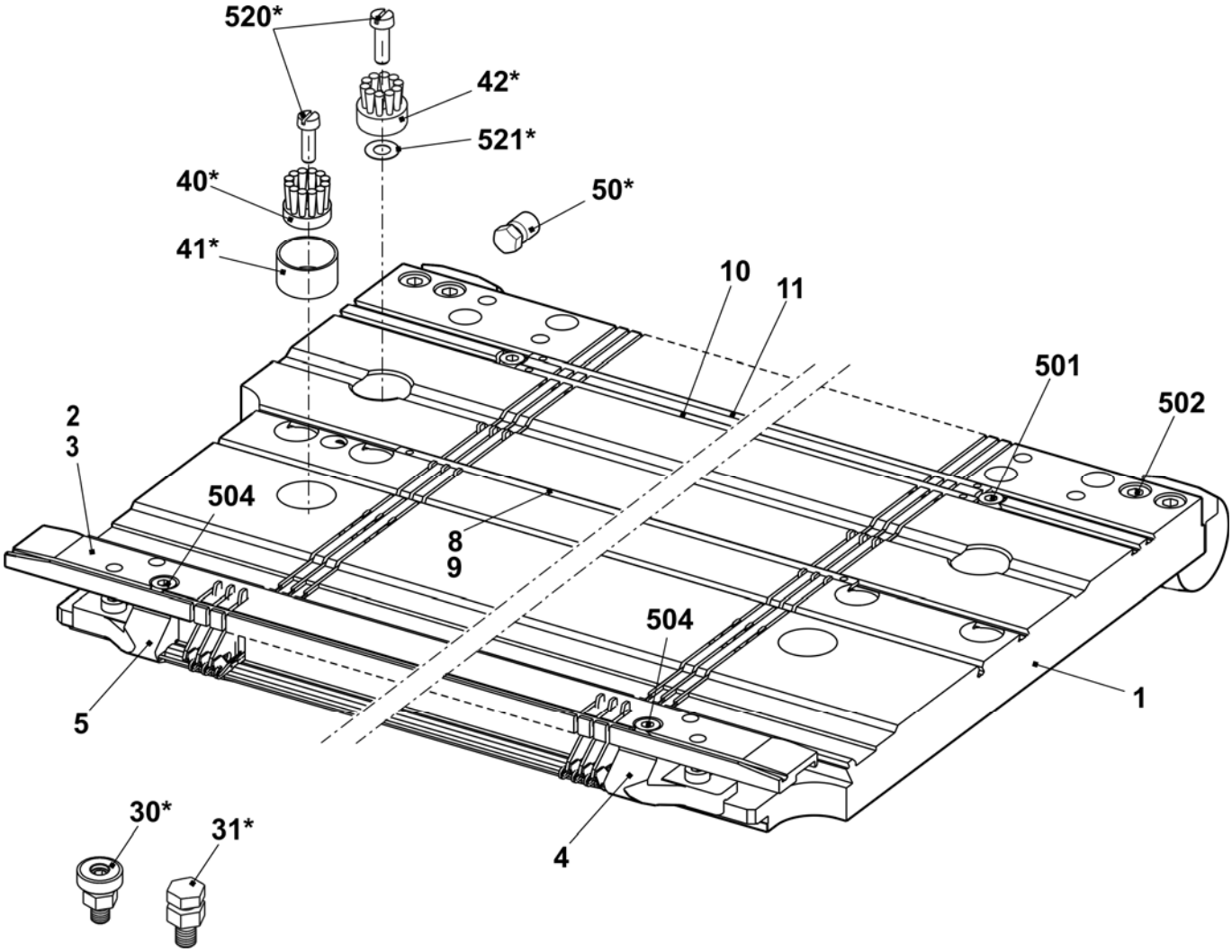

Needle bed E5.2 mg

Pos	Designation	ID		Pos	Designation	ID
Σ	**Needle bed co. at the front + rear E5.2 mg**	**240 013**		23	Needle rail on the left	205 311
4	Main trick wall E5.2	219 171		24	Needle rail on the right	205 312
6	Fixed wire Ø3.4	223 868		26	Support	206 352
7	Spring steel wire E4-5 Ø1.0	237 406		28	Needle rail in the middle	237 387
9a	Needle E5.2 vosa special 110.118-86	219 181		501	Cap screw M5x8-8.8 M	023 154
9b	Coupling part E5.2	219 188		504	Cap screw M5x12-8.8	022 943
11	Intermediate slider with brake E5.2	236 030		506	Set screw M6x12-45	022 400
12a	Selection jack E5.2	219 214		507	Sprung thrust piece B-M10	023 177
12b	Selector spring E5.2	219 265		508	Shim 0.02x18.5x34	023 194
13	Knock-over bit E5.2	221 367		509	Shim 0.03x18.5x34	023 195
14	Holding-down jack trick wall	227 716		510	Shim 0.05x18.5x34	023 196
21	Fixed wire Ø2.8	223 862		511	Shim 0.1x18.5x34	023 197
22	Spring steel wire Ø1.95	223 852		512	Shim 0.2x18.5x34	023 253

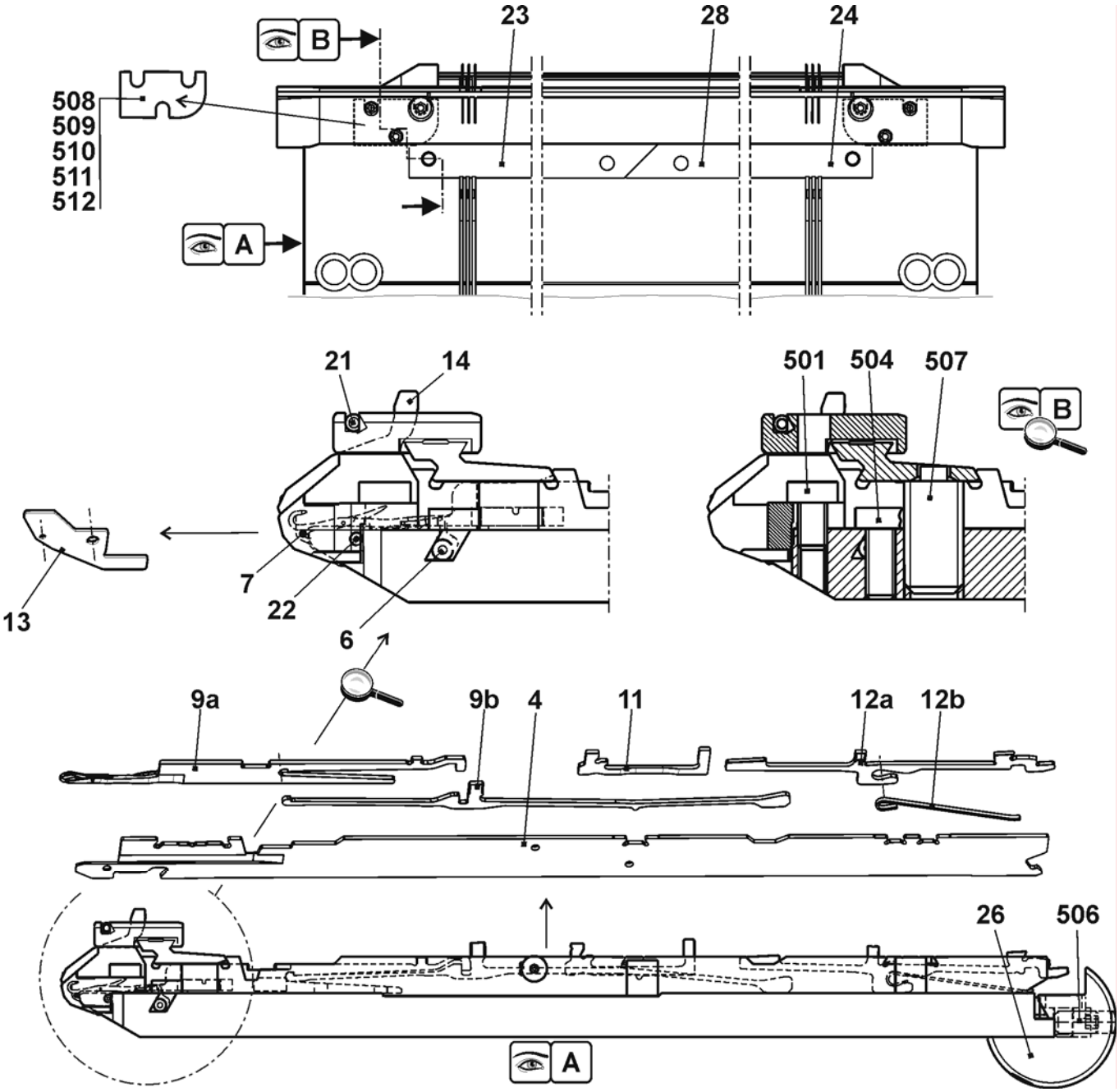

Continuation needle bed E5.2 mg

Pos	Designation	ID	Pos	Designation	ID
Σ	**Needle bed co. at the front + rear E5.2**	**240 013**	27	Stop screw	214 039
1	Needle bed at the front + rear E5.2	237 484	500	Cap screw M6x14	022 658
2	Holding-down jack bed at the front E5.2	237 491	502	Cap screw M5x8	023 379
3	Holding-down jack bed at the rear E5.2	237 499	503	Cap screw M5x22	023 193
5	Pressure slide	237 509	505	Set screw M3.5x3-1	020 512
8	Spring steel wire Ø2.0	223 854	30*	Adjusting piece	206 375
15	Limiter on the left E4-E8	205 343	31*	Set screw co.	207 712
16	Limiter on the right E4-E8	205 344	40*	Disk brush	235 612
17	Cover rail at the rear	237 379	41*	Container disk brush	233 012
18	Cover rail at the front E5.2	237 506	42*	Disk brush	235 612
19	Cover rail	237 382	50*	Adjusting bolt	240 765
20	Cover rail	237 383	520*	Cap screw M5x12	020 032
25	Bush	206 090	521*	Adjusting washer P6x12x0.3	023 540

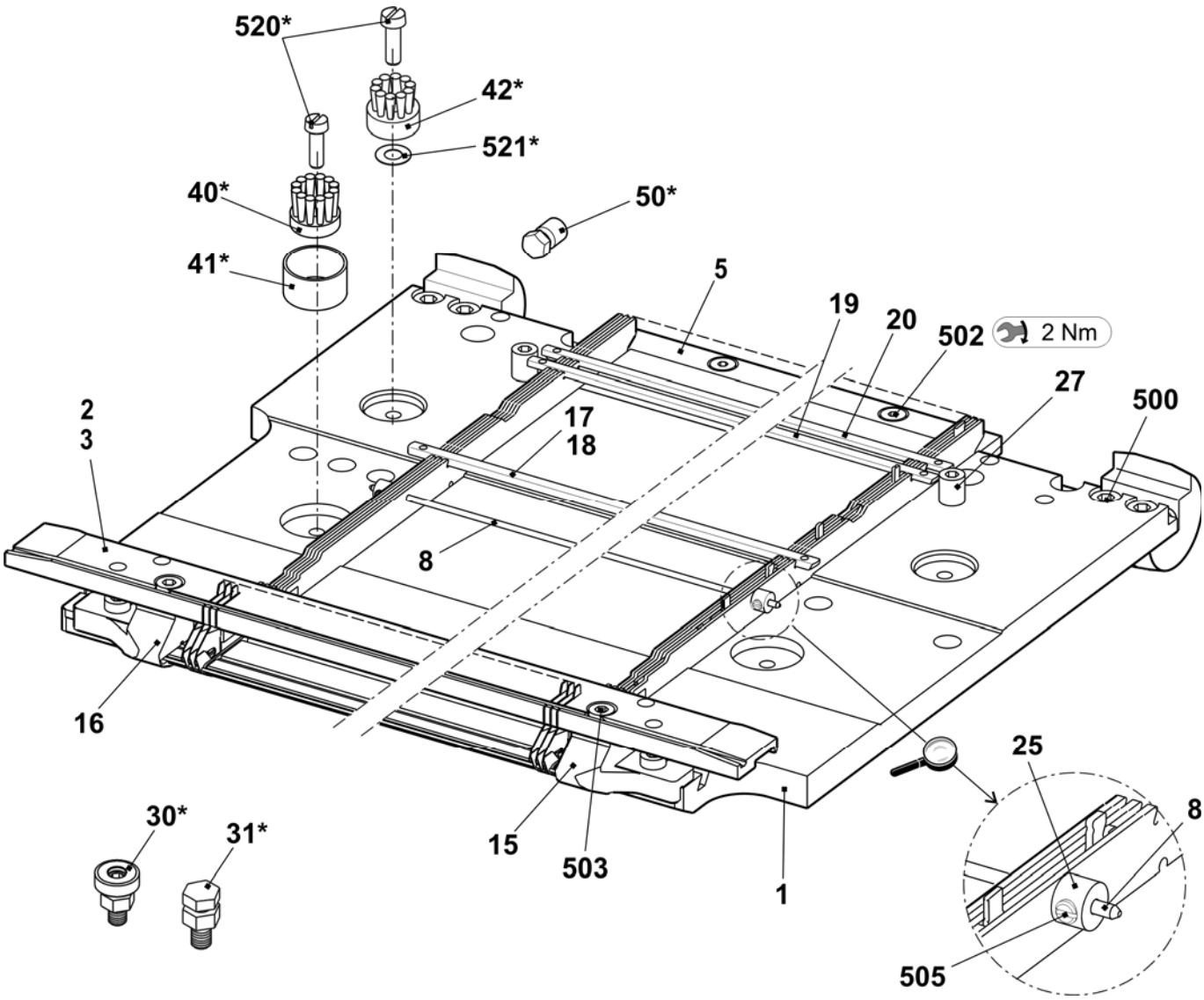

Needle bed E6.2 mg

Pos	Designation	ID	Pos	Designation	ID
Σ	**Needle bed co. at the front + rear E6.2**	**253 416**	23	Needle rail on the left	205 311
4	Main trick wall E12	252 628	24	Needle rail on the right	205 312
6	Fixed wire Ø3.4	223 868	26	Support	206 352
7	Spring steel wire E10-14 Ø0.6	223 849	28	Needle rail in the middle	237 387
8	Spring steel wire Ø2	251 085	501	Cap screw M5x8-8.8 M	023 154
9a	Needle E6.2	207 349	504	Cap screw M5x12-8.8	022 943
9b	Coupling part E10-12	200 683	506	Set screw M6x12-45	022 400
11	Intermediate slider with brake E10	237 324	507	Sprung thrust piece B-M10	023 177
12a	Selection jack E10-12	200 688	508	Shim 0.02x18.5x34	023 194
12b	Selector spring E10-12	200 691	509	Shim 0.03x18.5x34	023 195
13	Knock-over bit E12	205 013	510	Shim 0.05x18.5x34	023 196
14	Holding-down jack trick wall E12	227 821	511	Shim 0.1x18.5x34	023 197
21	Fixed wire Ø2.8	223 862	512	Shim 0.2x18.5x34	023 253

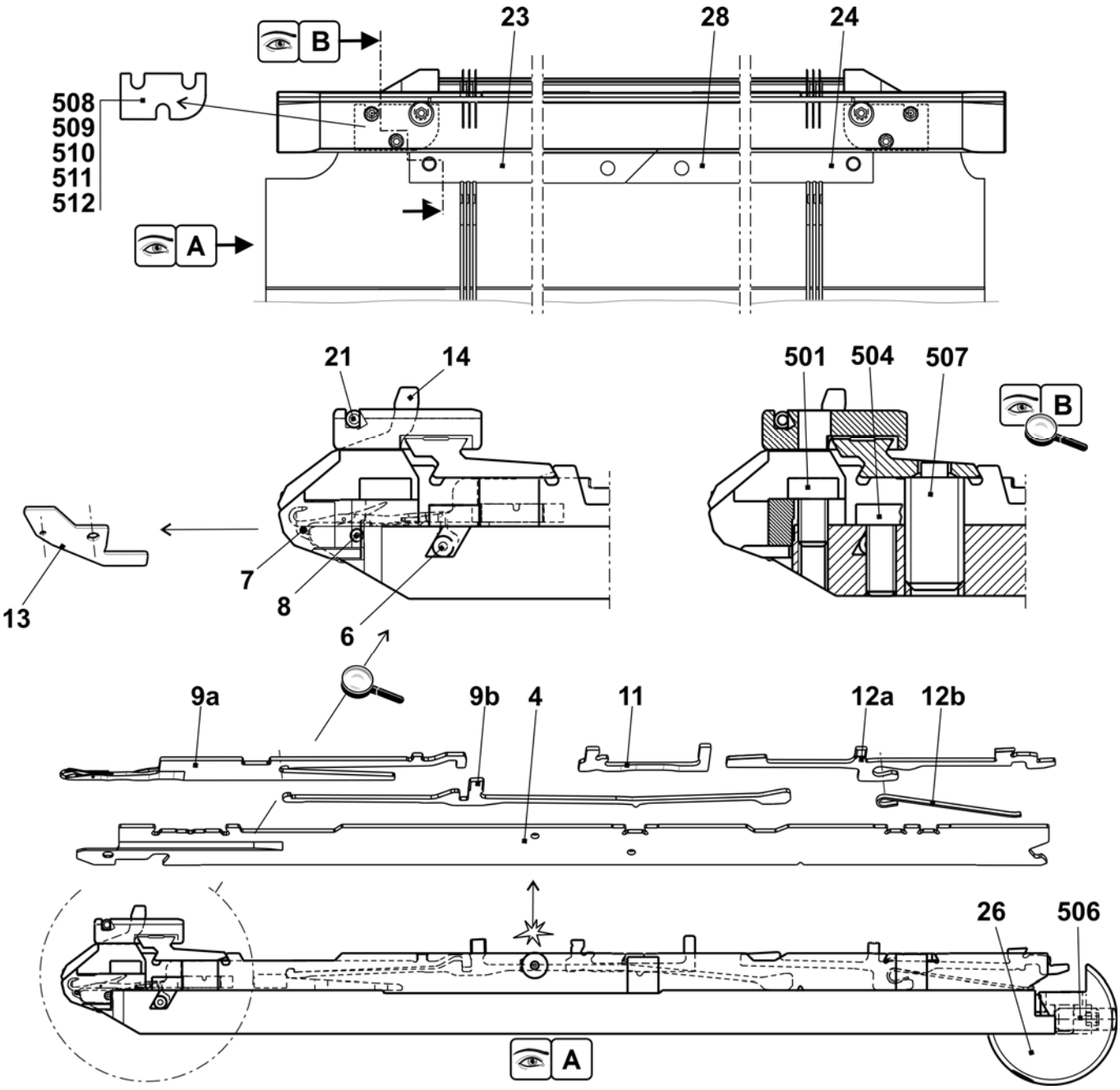

Continuation needle bed E6.2 mg

Pos	Designation	ID	Pos	Designation	ID
Σ	**Needle bed co. at the front + rear E6.2**	**253 416**	27	Stop screw	214 039
1	Needle bed at the front + rear E12 + E6.2	253 409	500	Cap screw M6x14	022 658
2	Holding-down jack bed at the front E6.2	237 492	502	Cap screw M5x8	023 379
3	Holding-down jack bed at the rear E6.2	237 500	503	Cap screw M5x22	023 193
5	Pressure slide	237 509	505	Set screw M3.5x3-1	020 512
8	Spring steel wire Ø2.0	251 085	30*	Adjusting piece	206 375
15	Limiter on the left E10-14	205 764	31*	Set screw co.	207 712
16	Limiter on the right E10-14	205 765	40*	Disk brush	235 612
17	Cover rail at the rear	237 379	41*	Container disk brush	233 012
18	Cover rail at the front E6.2	237 507	42*	Disk brush	235 612
19	Cover rail	237 382	50*	Adjusting bolt	240 765
20	Cover rail	237 383	520*	Cap screw M5x12	020 032
25	Bush	206 090	521*	Adjusting washer P6x12x0.3	023 540

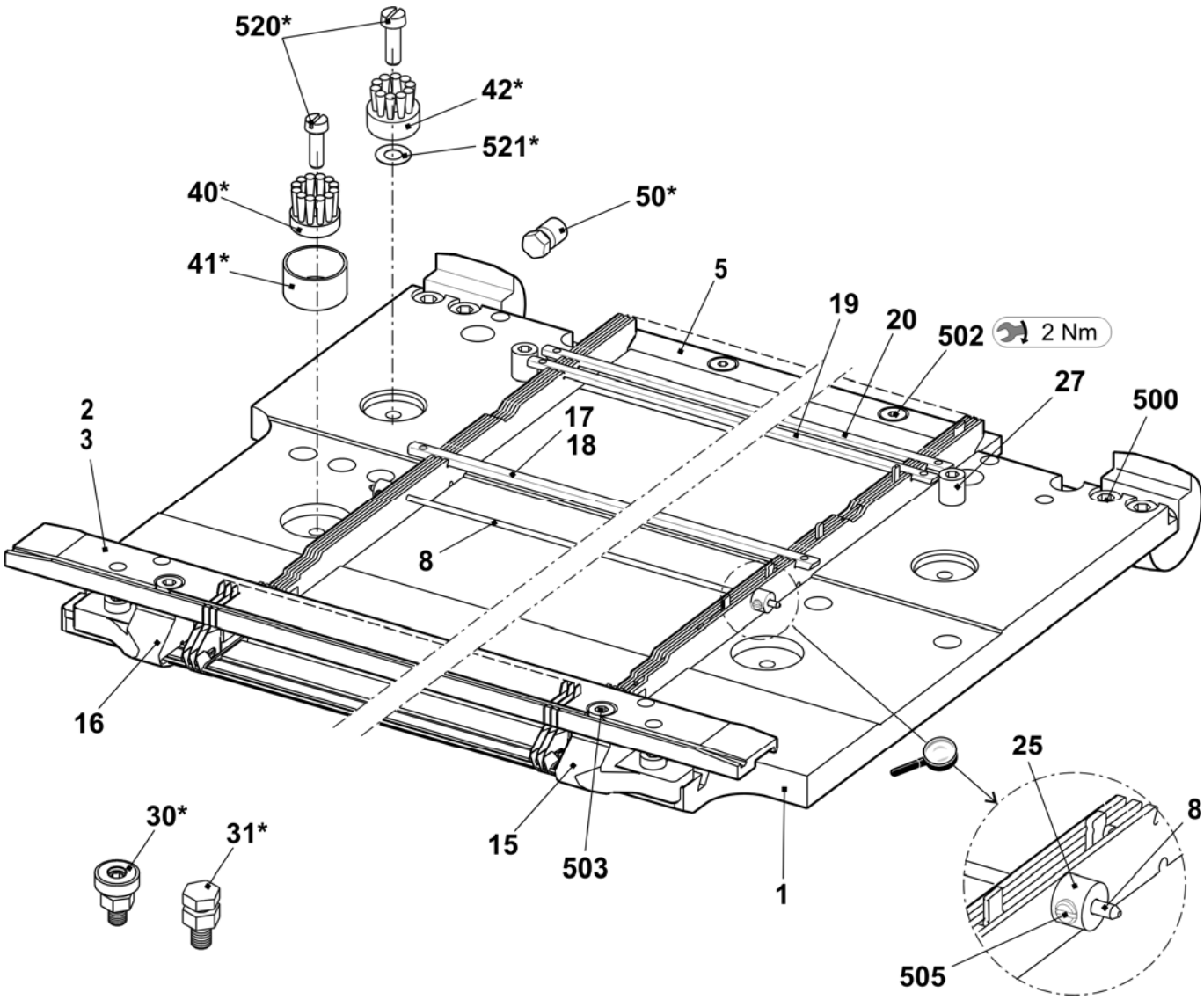

Needle bed E7.2 mg

Pos	Designation	ID	Pos	Designation	ID
Σ	**Needle bed co. at the front + rear E7.2**	**253 417**			
4	Main trick wall E14	252 629	24	Needle rail on the right	205 312
6	Fixed wire Ø3.4	223 868	26	Support	206 352
7	Spring steel wire E10-14 Ø0.6	223 849	28	Needle rail in the middle	237 387
8	Spring steel wire Ø2	251 085	501	Cap screw M5x8-8.8 M	023 154
9a	Needle E7.2 vosa special 112.70-62	225 230	504	Cap screw M5x12-8.8	022 943
9b	Coupling part E14	209 633	506	Set screw M6x12-45	022 400
11	Intermediate slider with brake E14	237 373	507	Sprung thrust piece B-M10	023 177
12	Selection jack with spring E14	224 725	508	Shim 0.02x18.5x34	023 194
13	Knock-over bit E14	209 649	509	Shim 0.03x18.5x34	023 195
14	Holding-down jack trick wall E14	235 262	510	Shim 0.05x18.5x34	023 196
21	Fixed wire Ø2.8	223 862	511	Shim 0.1x18.5x34	023 197
23	Needle rail on the left	205 311	512	Shim 0.2x18.5x34	023 253

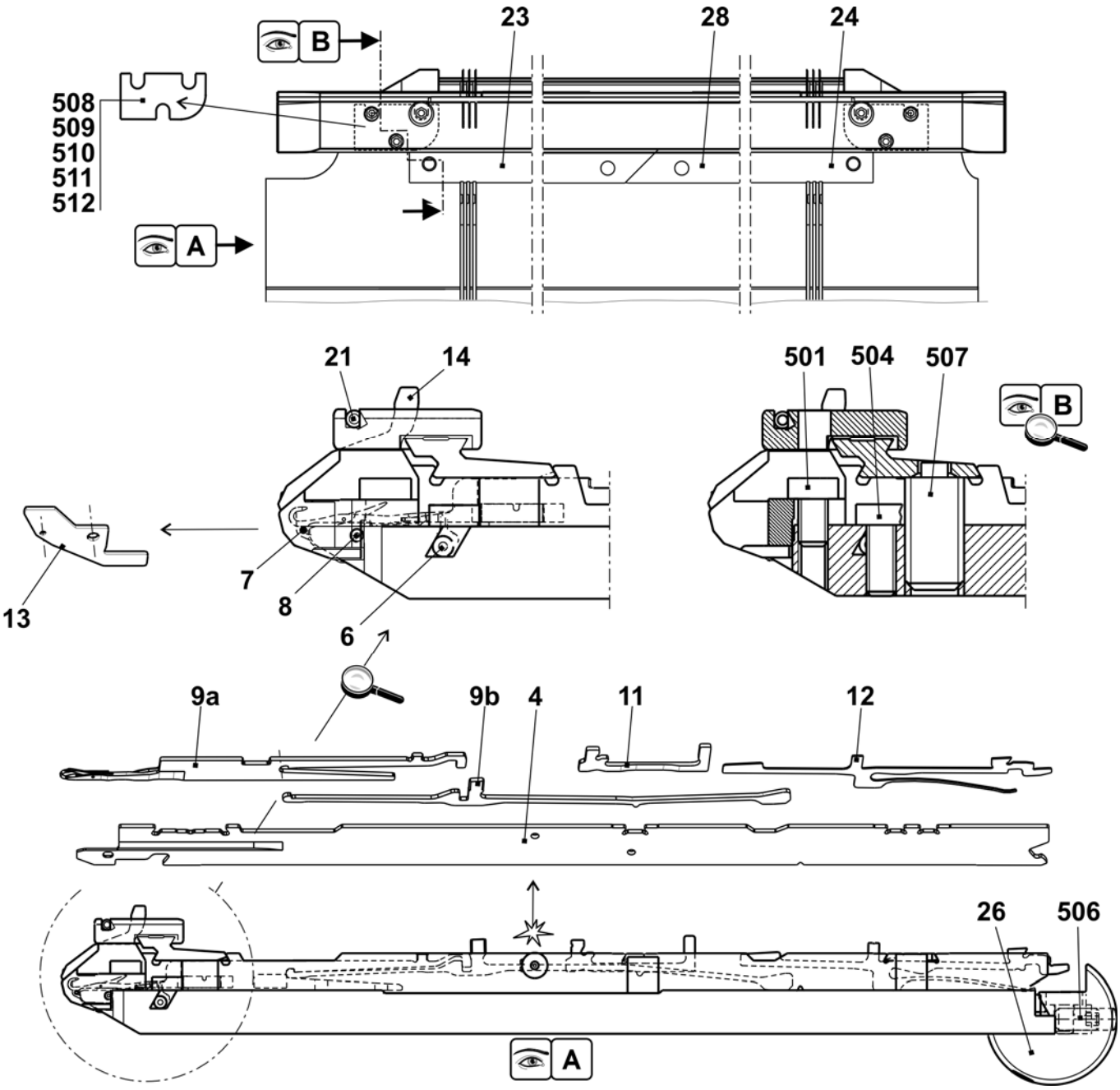

Continuation needle bed E7.2 mg

Pos	Designation	ID	Pos	Designation	ID
Σ	**Needle bed co. at the front + rear E7.2**	**253 417**	27	Stop screw	214 039
1	Needle bed at the front + rear E7.2	253 410	500	Cap screw M6x14	022 658
2	Holding-down jack bed at the front E7.2	237 493	502	Cap screw M5x8	023 379
3	Holding-down jack bed at the rear E7.2	237 501	503	Cap screw M5x22	023 193
5	Pressure slide	237 509	505	Set screw M3.5x3-1	020 512
8	Spring steel wire Ø2.0	251 085	30*	Adjusting piece	206 375
15	Limiter on the left E10-14	205 764	31*	Set screw co.	207 712
16	Limiter on the right E10-14	205 765	40*	Disk brush	235 612
17	Cover rail at the rear	237 379	41*	Container disk brush	233 012
18	Cover rail at the front E7.2	237 508	42*	Disk brush	235 612
19	Cover rail	237 382	50*	Adjusting bolt	240 765
20	Cover rail	237 383	520*	Cap screw M5x12	020 032
25	Bush	206 090	521*	Adjusting washer P6x12x0.3	023 540

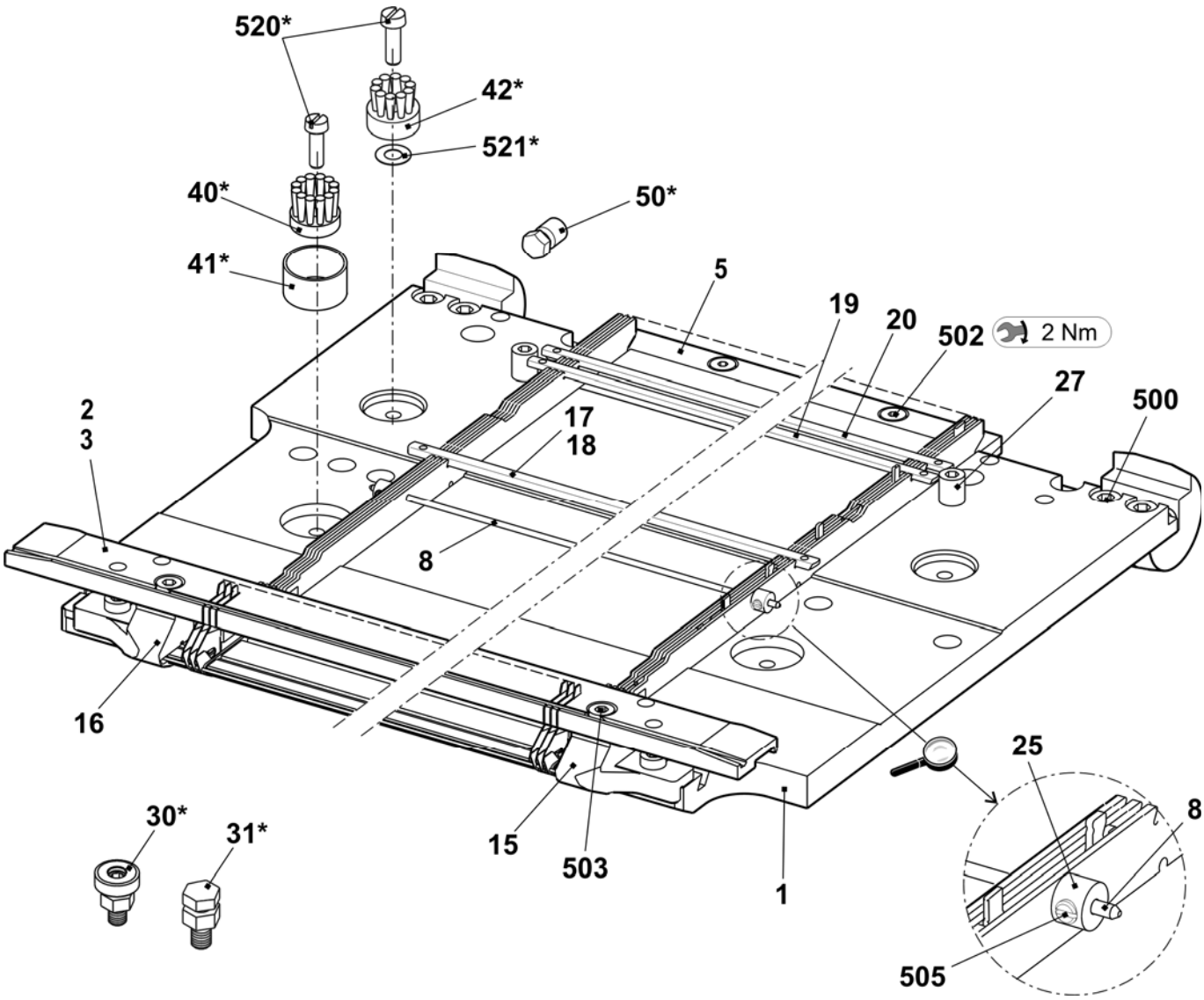

Needle bed E8.2 mg

Pos	Designation	ID	Pos	Designation	ID
Σ	**Needle bed co. at the front + rear E8.2 mg**	**251 116**			
4	Main trick wall E16	245 319	24	Needle rail on the right	205 312
6	Fixed wire Ø3.4	223 868	26	Support	206 352
7	Spring steel wire Ø0.5	238 942	28	Needle rail in the middle	237 387
8	Spring steel wire Ø2	251 085	501	Cap screw M5x8-8.8 M	023 154
9a	Needle E8.2	240 026	504	Cap screw M5x12-8.8	022 943
9b	Coupling part E16-20	220 382	506	Set screw M6x12-45	022 400
11	Intermediate slider with brake E16	237 326	507	Sprung thrust piece B-M10	023 177
12	Selection jack E16-20	222 265	508	Shim 0.02x18.5x34	023 194
13	Knock-over bit E16	222 503	509	Shim 0.03x18.5x34	023 195
14	Holding-down jack E16	222 504	510	Shim 0.05x18.5x34	023 196
21	Fixed wire Ø2.8	238 950	511	Shim 0.1x18.5x34	023 197
23	Needle rail on the left	205 311	512	Shim 0.2x18.5x34	023 253

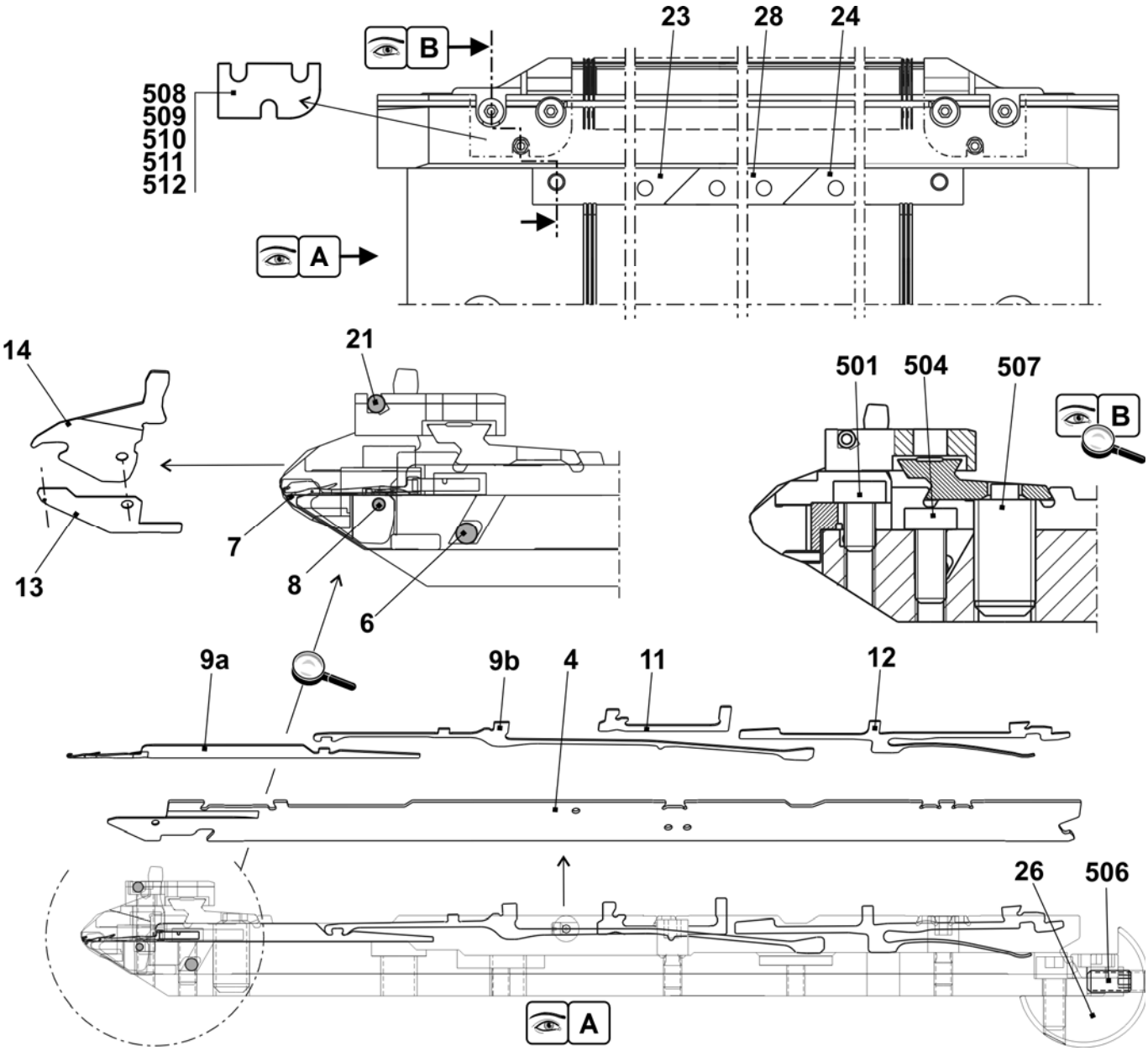

Continuation needle bed E8.2 mg

Pos	Designation	ID		Pos	Designation	ID
Σ	**Needle bed co. at the front + rear E8.2**	**251 116**		27	Stop screw	214 039
1	Needle bed at the front rear E16	251 077		500	Cap screw M6x14	022 658
2	Holding-down jack bed at the front E16	238 917		502	Cap screw M5x8	023 379
3	Holding-down jack bed at the rear E16	238 920		503	Cap screw M5x22	023 193
5	Pressure slide	237 509		505	Set screw M3.5x3-1	020 512
8	Spring steel wire Ø2.0	251 085		30*	Adjusting piece	206 375
15	Limiter on the left E16-E20	220 821		31*	Set screw co.	207 712
16	Limiter on the right E16-E20	220 822		40*	Disk brush	235 612
17	Cover rail at the rear	237 379		41*	Container disk brush	233 012
18	Cover rail at the front E16	238 925		42*	Disk brush	235 612
19	Cover rail	237 382		50*	Adjusting bolt	240 765
20	Cover rail	237 383		520*	Cap screw M5x12	020 032
25	Bush	206 090		521*	Adjusting washer P6x12x0.3	023 540

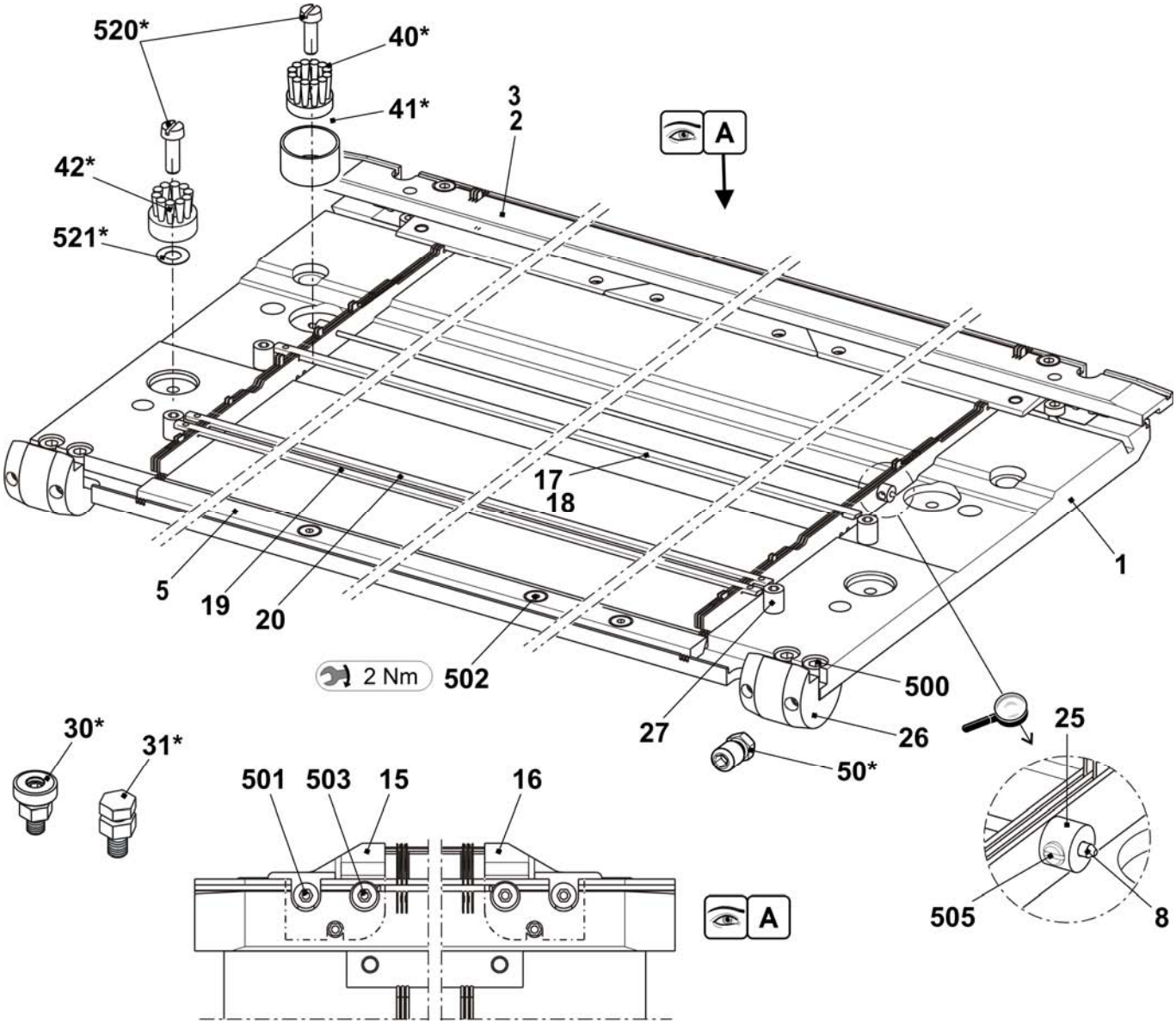

Left clamping/cutting bed E5 - E8 + E2,5.2 + E3,5.2 + E5.2 + E5m.4 + E7m.5 + E7m.8 + E8m.7

Pos	*Designation*		*ID*	*Pos*	*Designation*	*ID*
Σ	**Left clamping/cutting bed E5-8 (E2,5.2/3,5.2/5.2**			8	Spring holder	244 032
	5m.4/7m.5/7m.8/8m.7)		**253 242**	9	Spring holder	244 590
1	Guide plate EPT on the left E5-14		253 156	10	Holding strip	253 176
	1a	Guide plate on the left E5-14	253 155	11	Tuck needle on the left E5-8	244 729
	1b	Cover rail	253 173	12	Intermediate cam E10-14	244 591
	1c	Cover rail	253 174	13	Coupling part E4-E8	200 682
	1d	Fixed wire	253 172	14	Intermediate slider with brake E5-8	237 323
	1e	Guide pin	211 351	15	Selection jack E4-E8	200 687
	1f	Fixed wire	253 171	16	Selector spring E4-E8	200 690
	1g	Fixed wire	215 927	500	Cap screw M4x10	023 136
	511	Set screw M5x5	236 061	501	Hexagon nut M4	023 046
2	Cover on the left co. E10-14		251 120	502	U-washer 4	020 870
3	Catch hook on the left E10-14		251 377	503	Countersunk screw M3x18	242 728
4	Slider E5-14		253 084	504	Tension spring 4x0.55x18.9	023 392
5	Blade		243 948	505	Compression spring 07x4.3x12.1	023 521
6	Clamp on the left co.		244 633	506	Set screw M6x8	022 581
7	Intermediate piece		251 446	520*	Cap screw M6x20	244 824

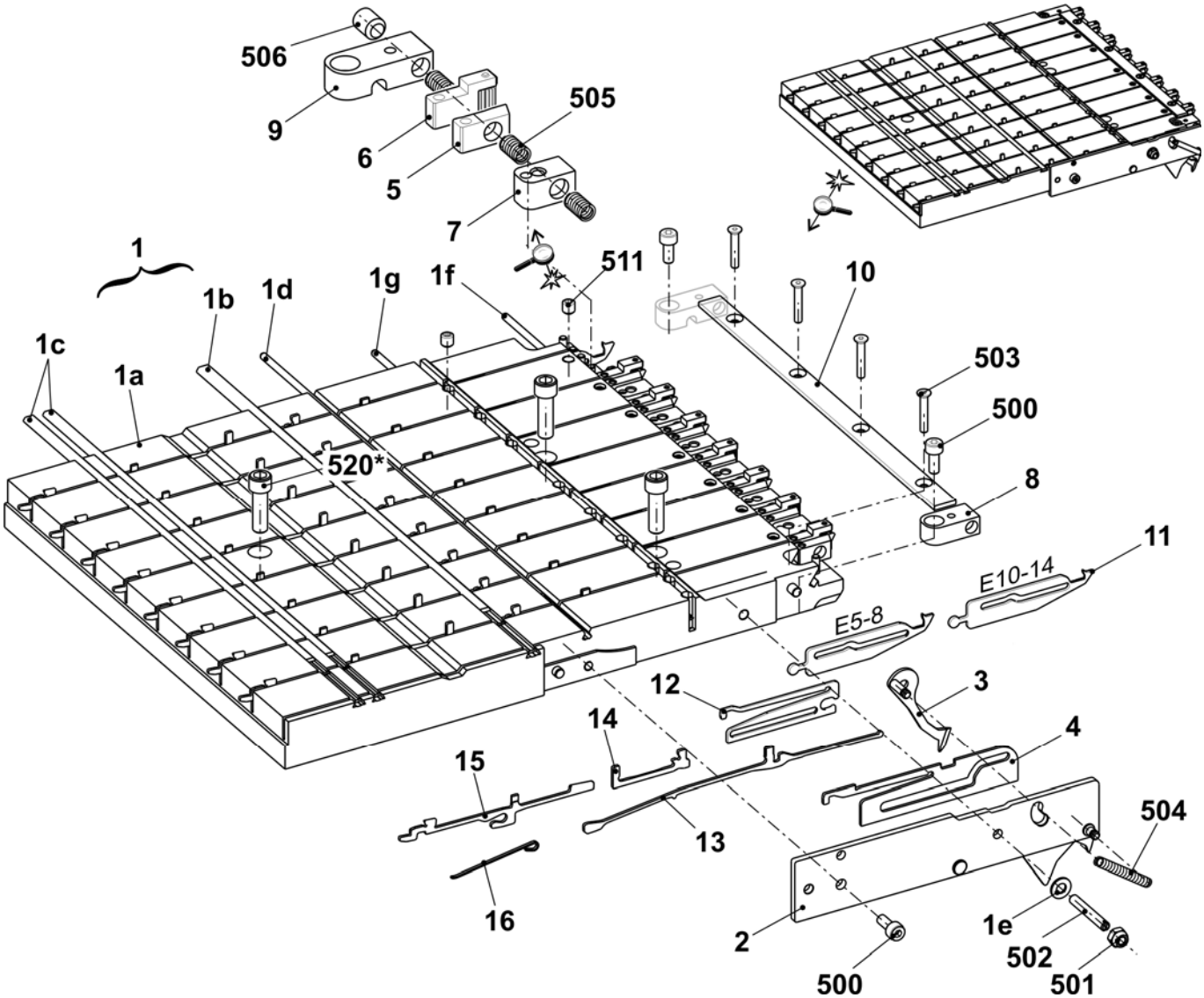

STOLL
THE RIGHT WAY TO KNIT

Left clamping/cutting bed E10 + E12 + E14 + E6.2 + E7.2 + E6.2(E12m.10) + E10m.12

Pos	Designation		ID	Pos	Designation	ID
Σ	**Left clamping/cutting bed E10-14 (E6.2/7.2/**			8	Spring holder	244 032
	6.2(E12m.10)/10m.12, E14/12)		**253 244**	9	Spring holder	244 590
1	Guide plate EPT on the left E5-14		253 156	10	Holding strip	253 176
	1a	Guide plate on the left E5-14	253 155	11	Tuck needle on the left E10-14	244 630
	1b	Cover rail	253 173	12	Intermediate cam E10-14	244 591
	1c	Cover rail	253 174	13	Coupling part E4-E8	200 682
	1d	Fixed wire	253 172	14	Intermediate slider with brake E5-8	237 323
	1e	Guide pin	211 351	15	Selection jack E4-E8	200 687
	1f	Fixed wire	253 171	16	Selector spring E4-E8	200 690
	1g	Fixed wire	215 927	500	Cap screw M4x10	023 136
	511	Set screw M5x5	236 061	501	Hexagon nut M4	023 046
2	Cover on the left co. E10-14		251 120	502	U-washer 4	020 870
3	Catch hook on the left E10-14		251 377	503	Countersunk screw M3x18	242 728
4	Slider E5-14		253 084	504	Tension spring 4x0.55x18.9	023 392
5	Blade		243 948	505	Compression spring 07x4.3x12.1	023 521
6	Clamp on the left co.		244 633	506	Set screw M6x8	022 581
7	Intermediate piece		251 446	520*	Cap screw M6x20	244 824

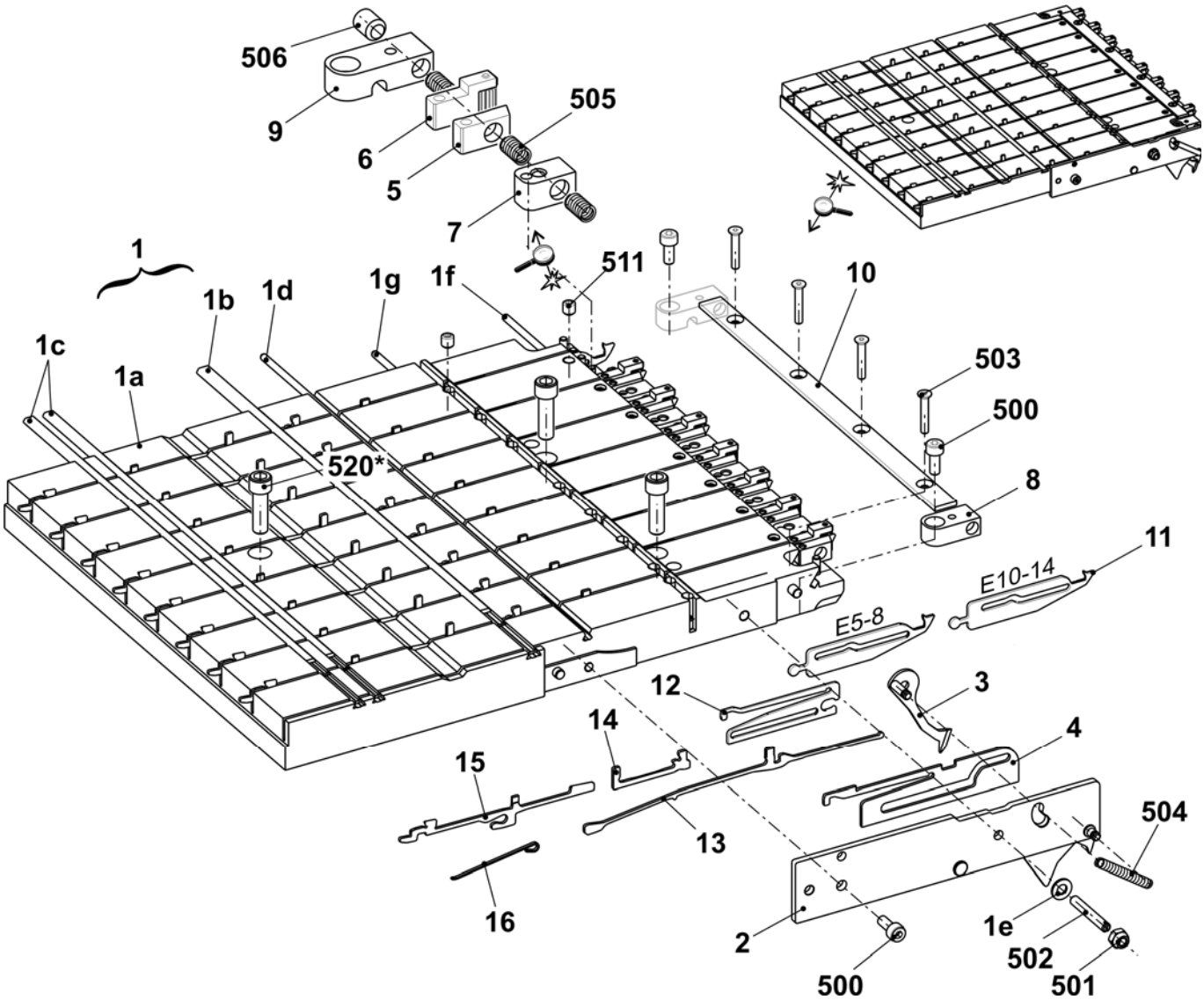

Left clamping/cutting bed E16 + E18 + E8.2mg

Pos	*Designation*		*ID*	*Pos*	*Designation*	*ID*
Σ	**Left clamping/cutting bed**			8	Spring holder	244 032
	E16-18 (E8.2/9.2)		**253 246**	9	Spring holder	244 590
1	Guide plate EPT on the left E16-18		253 160	10	Holding strip	253 176
	1a	Guide plate on the left E16-18	253 159	11	Tuck needle on the left E16-18	244 740
	1b	Cover rail	253 173	12	Intermediate cam	244 741
	1c	Cover rail	253 174	13	Coupling part E10-12	200 683
	1d	Fixed wire	253 172	14	Intermediate slider with brake E10-12	237 324
	1e	Guide pin	211 351	15	Selection jack E10-12	200 688
	1f	Fixed wire	253 171	16	Selector spring E10-12	200 691
	1g	Fixed wire	215 927	500	Cap screw M4x10	023 136
	511	Set screw M5x5	236 061	501	Hexagon nut M4	023 046
2	Cover on the left co. E16-18		242 835	502	U-washer 4	020 870
3	Catch needle on the left E16-18		242 831	503	Countersunk screw M3x18	242 728
4	Slider E16-18		242 828	504	Tension spring 4x0.55x18.9	023 392
5	Blade		243 948	505	Compression spring 07x4.3x12.1	023 521
6	Clamp on the left co.		244 633	506	Set screw M6x8	022 581
7	Intermediate piece		251 446	520*	Cap screw M6x20	244 824

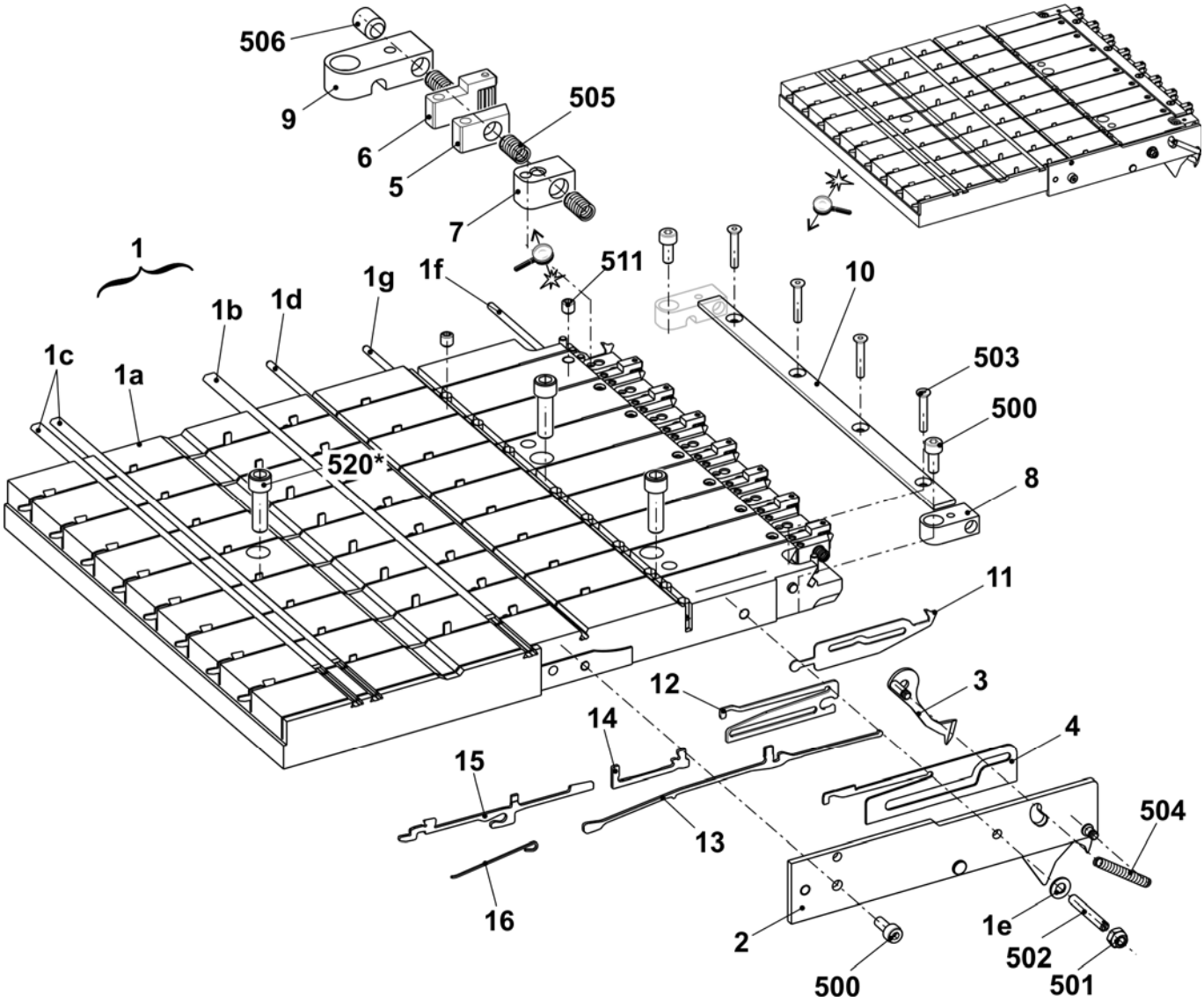

STOLL
THE RIGHT WAY TO KNIT

Right clamping/cutting bed E5 + E7 + E8 + E2,5.2 + E3,5.2 + E5.2 + E5m.4 + E7m.5 + E7m.8 + E8m.7

Pos	Designation		ID	Pos	Designation	ID
Σ	**Right clamping/cutting bed E5-8 (E2,5.2/3,5.2/5.2 5m.4/7m.5/7m.8/8m.7)**		**253 241**	8	Spring holder	244 032
				9	Spring holder	244 590
1	Guide plate EPT on the right E5-14		253 154	10	Holding strip	253 176
	1a	Guide plate on the right E5-14	251 410	11	Tuck needle on the right E5-8	244 728
	1b	Cover rail	253 173	12	Intermediate cam E10-14	244 591
	1c	Cover rail	253 174	13	Coupling part E4-E8	200 682
	1d	Fixed wire	253 172	14	Intermediate slider with brake E5-8	237 323
	1e	Guide pin	211 351	15	Selection jack E4-E8	200 687
	1f	Fixed wire	253 171	16	Selector spring E4-E8	200 690
	1g	Fixed wire	215 927	500	Cap screw M4x10	023 136
	511	Set screw M5x5	236 061	501	Hexagon nut M4	023 046
2	Cover on the right co. E10-14		251 119	502	U-washer 4	020 870
3	Catch hook on the right E10-14		251 378	503	Countersunk screw M3x18	242 728
4	Slider E5-14		253 084	504	Tension spring 4x0.55x18.9	023 392
5	Blade		243 948	505	Compression spring 07x4.3x12.1	023 521
6	Clamp on the right co.		244 602	506	Set screw M6x8	022 581
7	Intermediate piece		251 446	520*	Cap screw M6x20	244 824

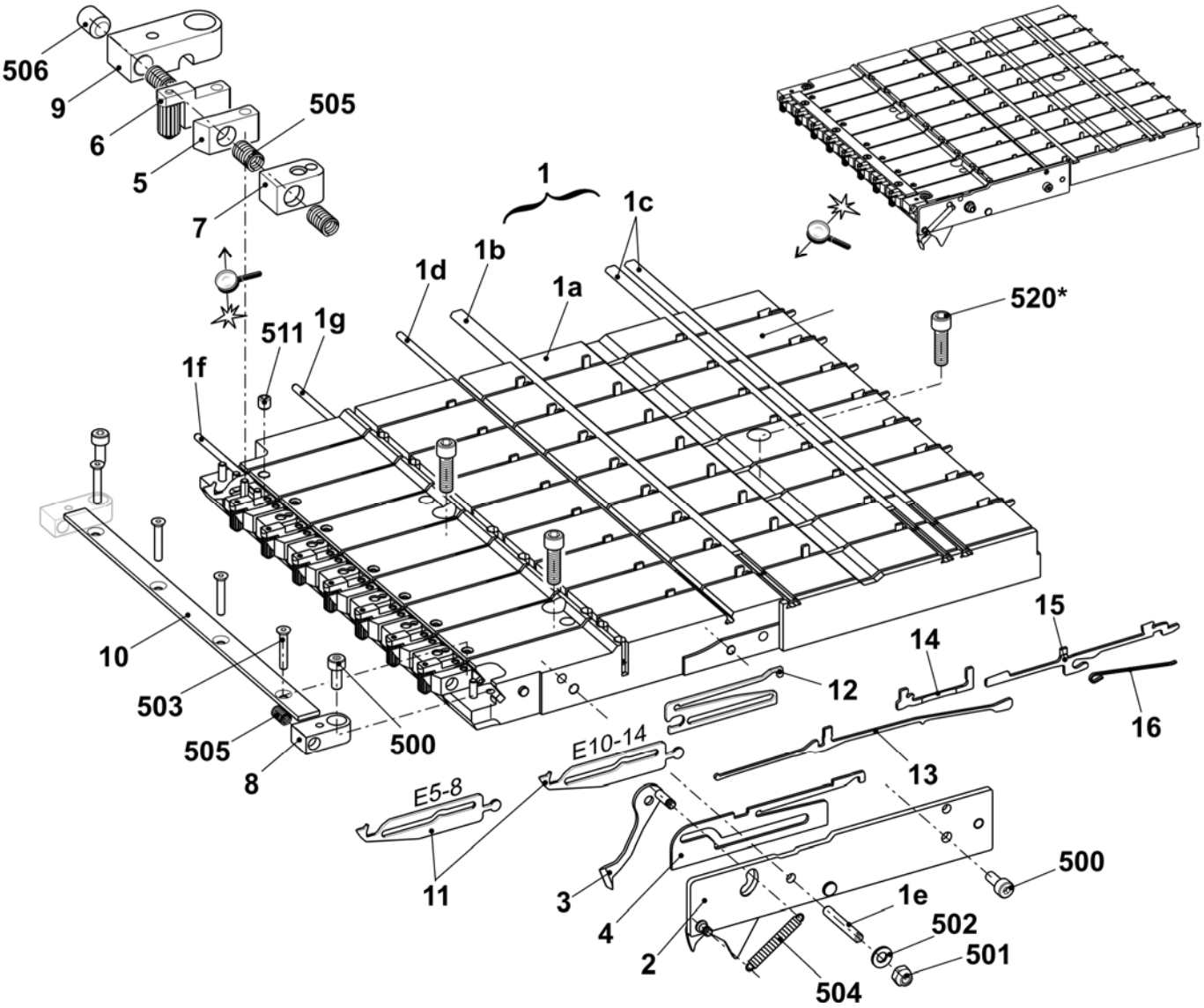

Right clamping/cutting bed E10 + E12 + E14 + E6.2 + E7.2 + E6.2(E12m.10) + E10m.12

Pos	*Designation*		*ID*	*Pos*	*Designation*	*ID*
Σ	**Right clamping/cutting bed E10-14 (E6.2/7.2/ 6.2(E12m.10)/10m.12, E14/12)**		**253 243**	8	Spring holder	244 032
				9	Spring holder	244 590
1	Guide plate EPT on the right E5-14		253 154	10	Holding strip	253 176
	1a	Guide plate on the right E5-14	251 410	11	Tuck needle on the right E10-14	244 592
	1b	Cover rail	253 173	12	Intermediate cam E10-14	244 591
	1c	Cover rail	253 174	13	Coupling part E4-E8	200 682
	1d	Fixed wire	253 172	14	Intermediate slider with brake E5-8	237 323
	1e	Guide pin	211 351	15	Selection jack E4-E8	200 687
	1f	Fixed wire	253 171	16	Selector spring E4-E8	200 690
	1g	Fixed wire	215 927	500	Cap screw M4x10	023 136
	511	Set screw M5x5	236 061	501	Hexagon nut M4	023 046
2	Cover on the right co. E10-14		251 119	502	U-washer 4	020 870
3	Catch hook on the right E10-14		251 378	503	Countersunk screw M3x18	242 728
4	Slider E5-14		253 084	504	Tension spring 4x0.55x18.9	023 392
5	Blade		243 948	505	Compression spring 07x4.3x12.1	023 521
6	Clamp on the right co.		244 602	506	Set screw M6x8	022 581
7	Intermediate piece		251 446	520*	Cap screw M6x20	244 824

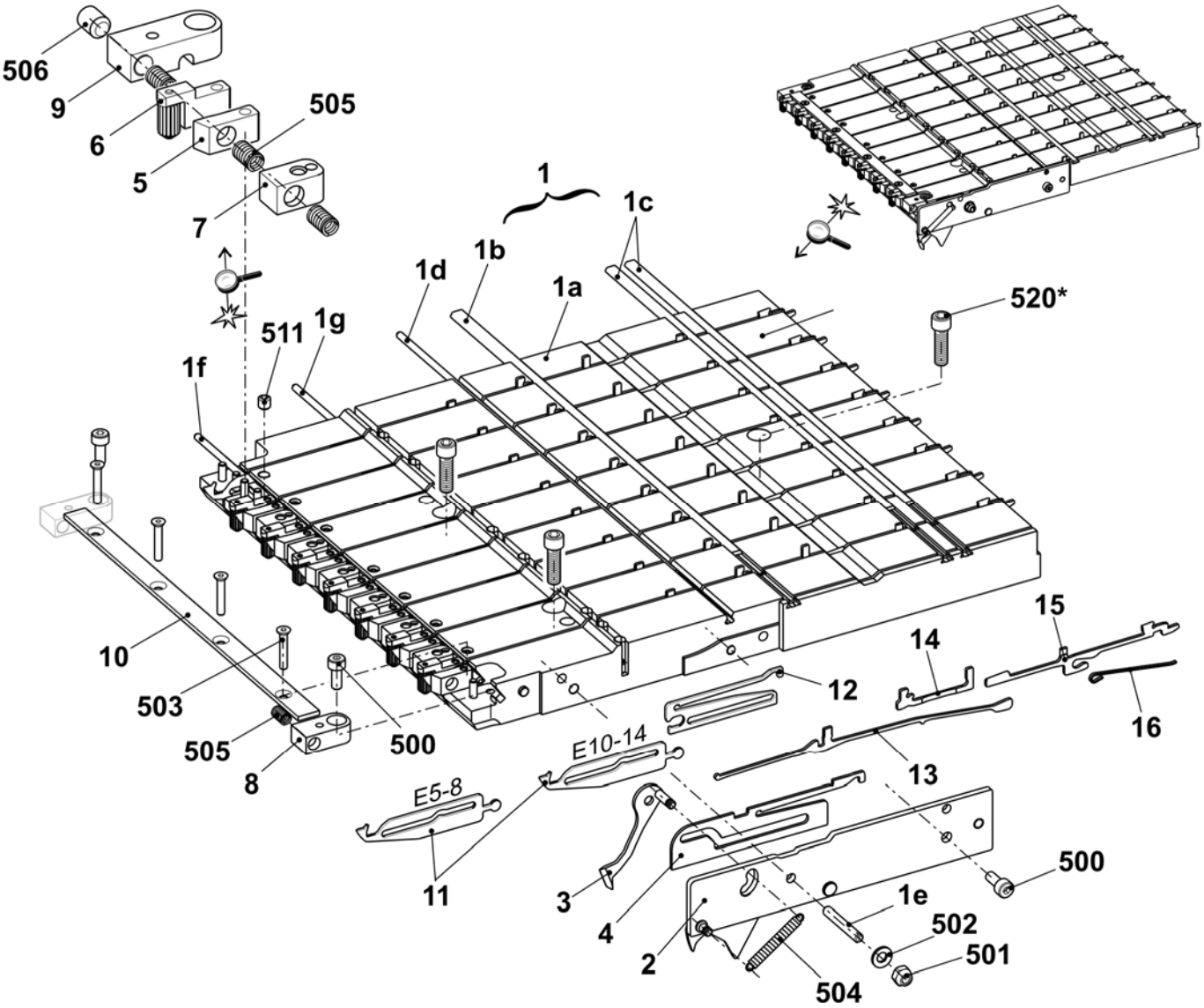

Right clamping/cutting bed E16 + E18 + E8.2mg

Pos	Designation		ID	Pos	Designation	ID
Σ	**Clamping/cutting bed on the right**			8	Spring holder	244 032
	E16-18 (E8.2/9.2)		**253 245**	9	Spring holder	244 590
1	Guide plate EPT on the right E16-18		253 158	10	Holding strip	253 176
	1a	Guide plate on the right E16-18	253 157	11	Tuck needle on the right E16-18	244 739
	1b	Cover rail	253 173	12	Intermediate cam	244 741
	1c	Cover rail	253 174	13	Coupling part E10-12	200 683
	1d	Fixed wire	253 172	14	Intermediate slider with brake E10-12	237 324
	1e	Guide pin	211 351	15	Selection jack E10-12	200 688
	1f	Fixed wire	253 171	16	Selector spring E10-12	200 691
	1g	Fixed wire	215 927	500	Cap screw M4x10	023 136
	511	Set screw M5x5	236 061	501	Hexagon nut M4	023 046
2	Cover on the right co. E16-18		242 836	502	U-washer 4	020 870
3	Catch hook on the right E16-18		242 833	503	Countersunk screw M3x18	242 728
4	Slider E16-18		242 828	504	Tension spring 4x0.55x18.9	023 392
5	Blade		243 948	505	Compression spring 07x4.3x12.1	023 521
6	Clamp on the right co.		244 602	506	Set screw M6x8	022 581
7	Intermediate piece		251 446	520*	Cap screw M6x20	244 824

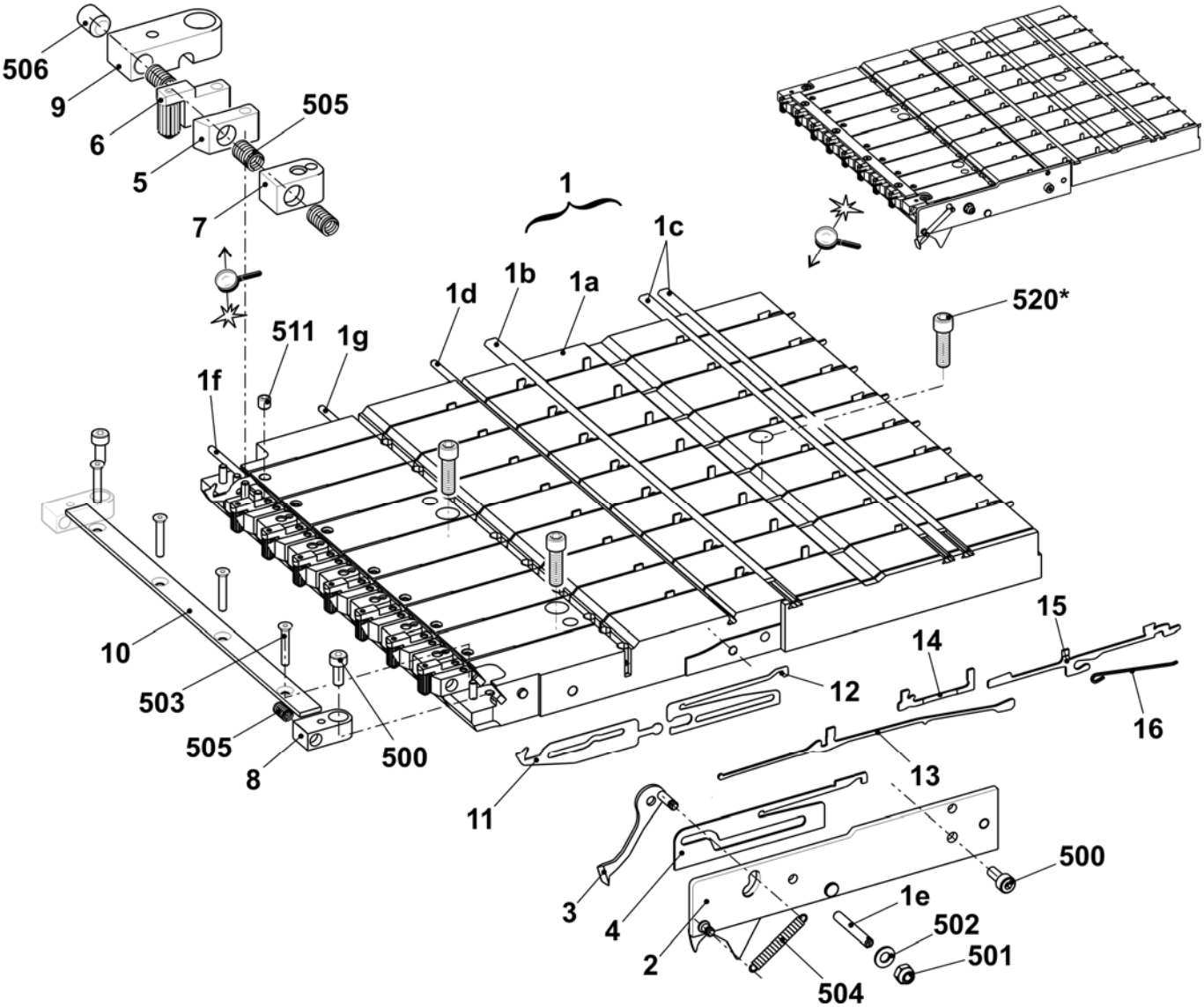

Cover on the left and on the right

Pos	*Designation*	*ID*		*Pos*	*Designation*	*ID*
1	Cover on the left	241 938		500	Countersunk screw M8x10	241 930
2	Cover on the right	241 939				

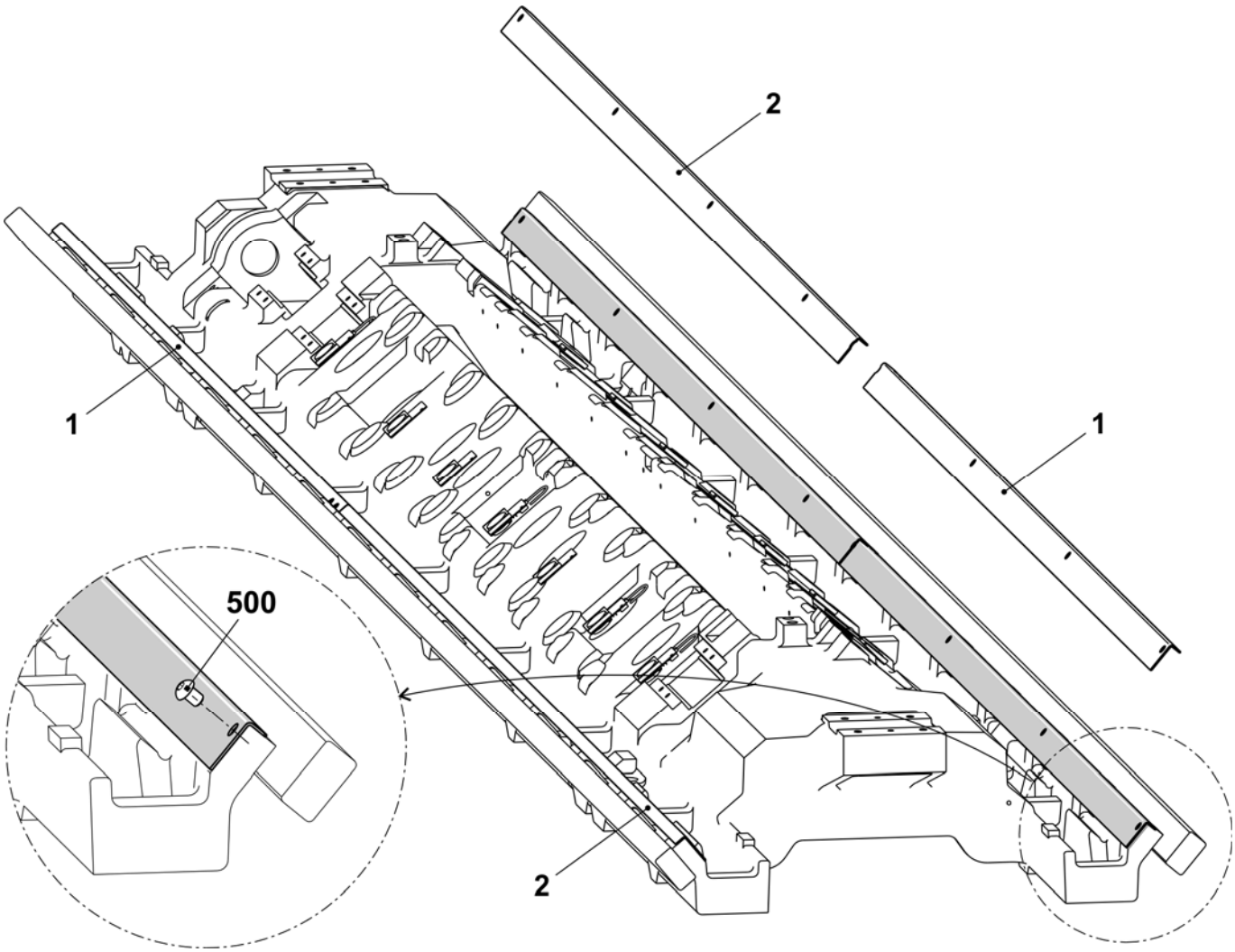

Connection measuring bar

Pos	Designation	ID
ΣG	**Connection measuring bar coarse (E10 + E10m.12)**	**244 606**
1	Bearing fork	240 689
2	Stop point	209 289
500	Cap screw M6x16	020 135
501	Countersunk screw M6x20	241 603

Pos	Designation	ID
ΣF	**Connection measuring bar fine (E12 + E14 + E16 + E18 + E5.2 + E6.2 + E7.2 + E8.2 mg)**	**244 608**
1	Bearing fork	244 535
2	Plunger	244 536
3	Stop point	244 537
4	Shoulder screw	209 790
500	Countersunk screw M6x20	241 603
501	Cap screw M5x16	022 726

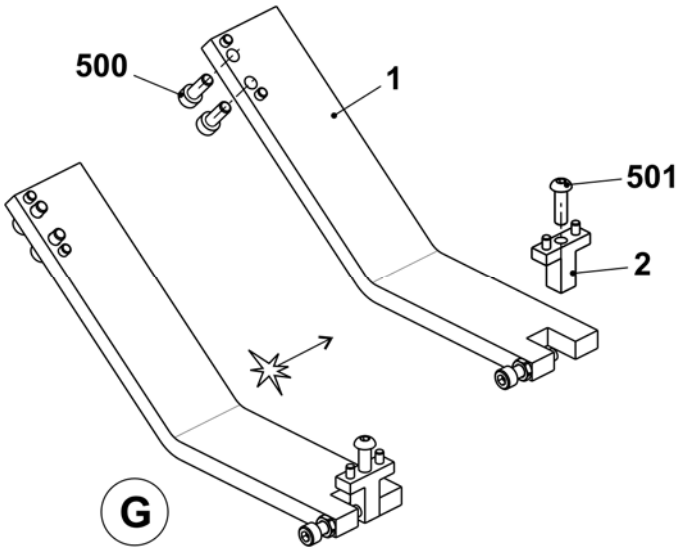

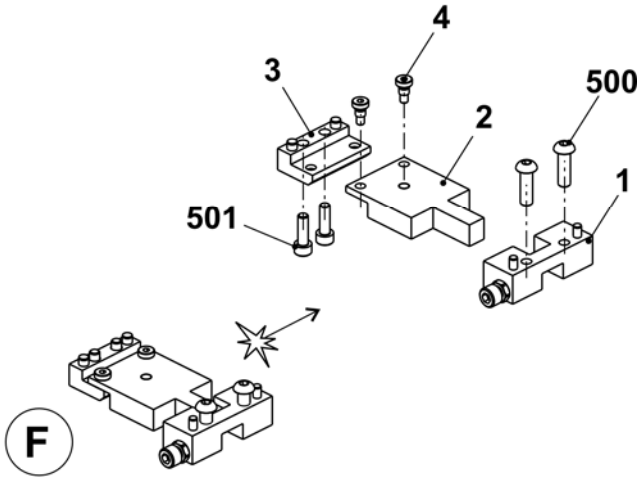

Tandem carriage

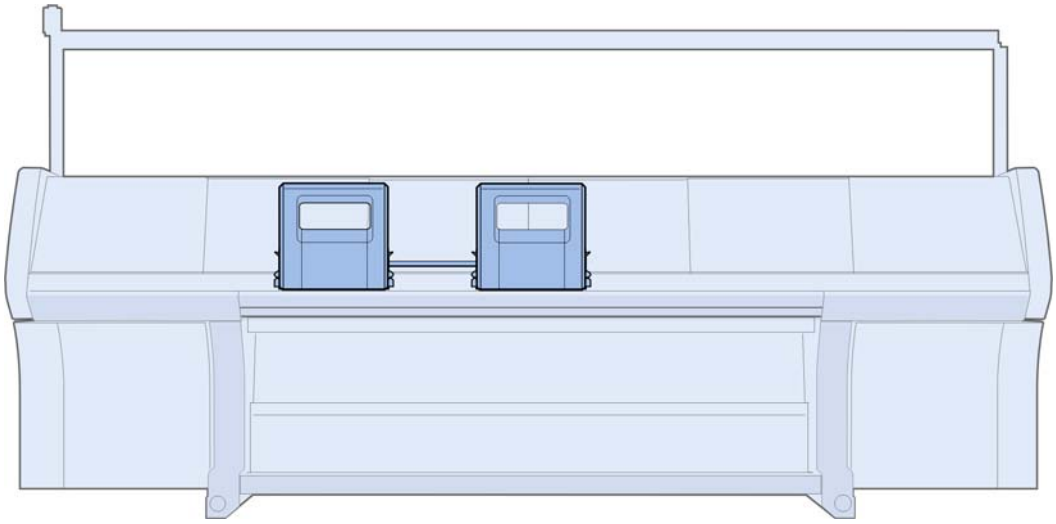

Overview of carriage

Pos	Designation	ID	Pos	Designation	ID
Σ	**Carriage co.**				
	E5 + E5m.4 + E2,5.2kw + E2,5.2mg E3,5.2kw + E3,5.2mg	**244 240**	2	Cam box set co. E5 + E5m.4 + E7m.5 E2,5.2kw + E2,5.2mg E3,5.2kw E5.2kw + E5.2mg	244 239
	Left co. E3,5.2mg	**243 910**			
	Right co. E3,5.2mg	**243 911**			
	E5.2kw	**244 399**			
	E5.2mg	**244 397**		E3,5.2 mg	243 918
	E7 + E8 + E7m.8 + E8m.7	**244 387**		E7 + E8 + E7m.8 + E8m.7	244 389
	E7m.5	**244 787**		E10	244 382
	E10	**244 378**		E10m.12	244 394
	E10m.12	**244 394**		E6.2kw	244 403
	E6.2kw	**244 401**		E6.2mg	242 275
	E6.2 mg	**242 272**		E6.2(12m.10)	244 286
	E6.2(12m.10)	**244 284**		E12	243 916
	E12	**243 908**		E7.2kw	242 274
	E7.2kw	**242 270**		E7.2 mg	243 919
	E7.2mg	**243 912**		E14	244 384
	E14	**244 380**		E16 + E18	242 243
	E16 + E18	**242 233**		E8.2mg	243 920
	E8.2mg	**243 914**	10	Wiper (felt)	241 411
3	YC driving outside co.	241 080	11	Bolt	212 392
4	YC driving in the middle co.	241 081	12	Bolt	243 171
5	Holding-down jack control co.		13	Guide plate at the rear on the left	245 323
8	Carriage assembly 822	242 232	14	Cover plate on the left	250 274
9	Selection system co.		15	Cover plate on the right	250 275
	E5 + E5m.4 + E7m.5 E2,5.2kw + E2,5.2mg E3,5.2kw + E3,5.2mg E7 + E8 + E7m.8 + E8m.7	216 218	19	Guide plate at the rear on the right	245 324
			21	Motor unit 550	239 407
				216 Gear rack at the top	209 781
				217 Gear rack in the middle	209 782
	E10 + E12 + E10m.12 + E6.2 (12m.10) E5.2mg + E5.2kw + E6.2kw + E6.2mg	216 219		218 Gear rack at the bottom	209 783
				521 Screw M4x12	023 367
	E14 + E7.2kw + E7.2mg	229 300	22	Distributor at the rear on the left 822 OKC	242 239
	E16 + E18 + E8.2mg	220 114	23	Distributor at the front on the left 822 OKC	242 240

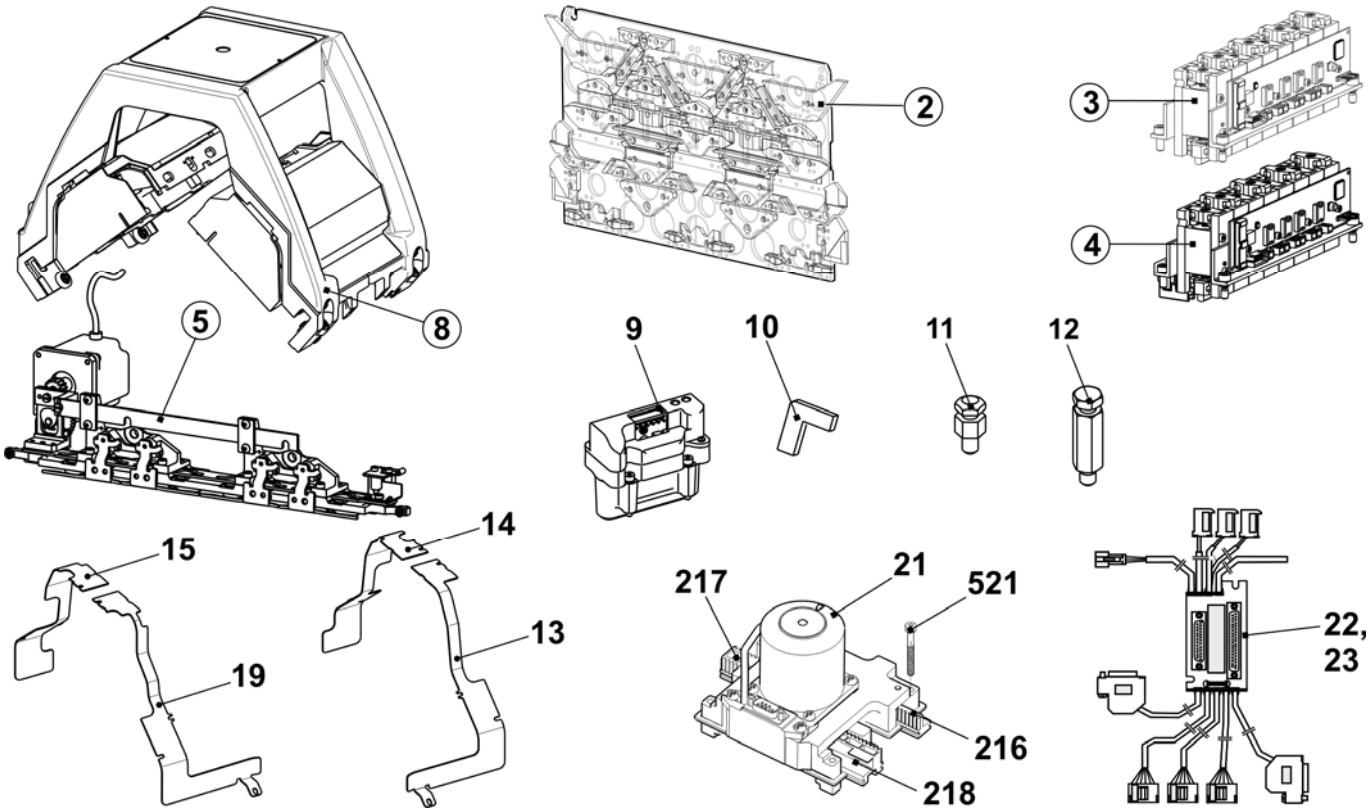

Carriage assembly

Pos	Designation	ID		Pos	Designation	ID
Σ	**Carriage assembly 822**	**242 232**		9	Bush	209 275
1	Carriage frame, 2 cam boxes	240 704		10	Bush	209 274
2	Carriage part, 2 cam boxes	241 756		11	Eccentric	222 983
3	Carriage cover at the top ECO2	252 616		13	Fixing bolt linking spot	244 179
4	Shim	225 312		500	Cap screw M8X30	020 143
5	Shoulder screw	211 750		503	Circlip 5	021 021
8	Bush	207 546		515	Threaded bushing M12x11.5	041 863

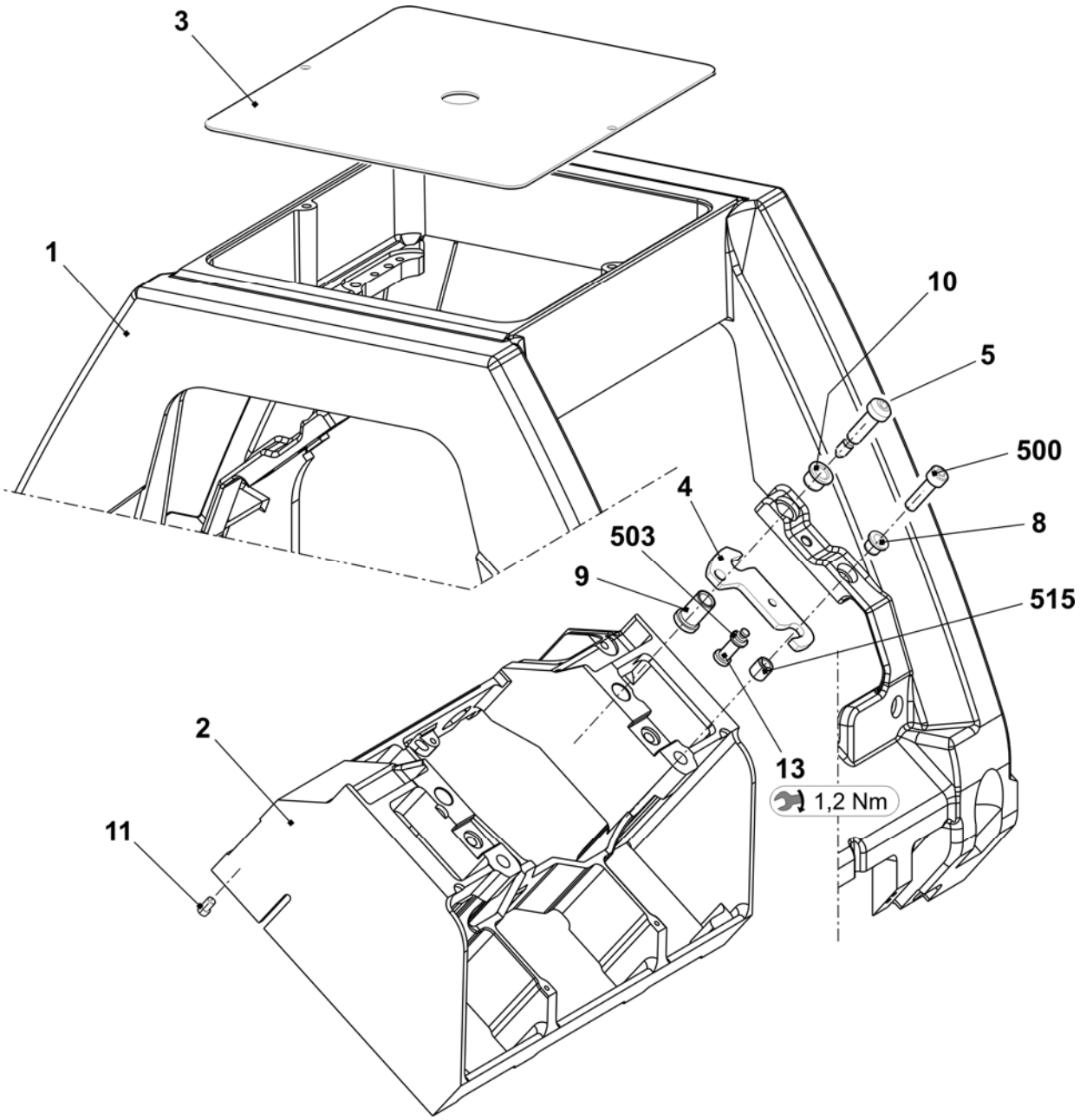

Carriage coupling

Pos	Designation	ID		Pos	Designation	ID
100	Coupling rod 42" and 44"	242 889		120	Sleeve	225 600
110	Connecting rod short	242 891		506	Cap screw M16x45	023 366

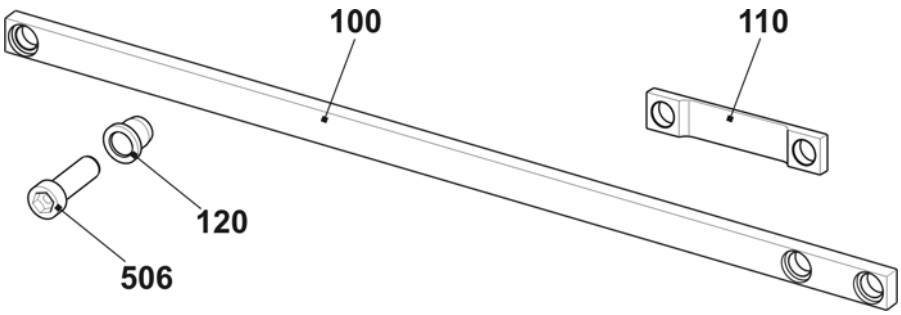

Brush holder

Pos	Designation	ID		Pos	Designation	ID
Σ	**Brush holder co.**			4	Brush	
	E5 + E7+ E8 + E5m.4 + E7m.5 + E7m.8 + E8m.7 + E2,5.2 + E3,5.2 + E5.2	**220 064**			E5 + E7+ E8 + E5m.4 + E7m.5 + E7m.8 + E8m.7 + E2,5.2 + E3,5.2 + E5.2	203 254
	E10 + E12 + E14 + E10m.12 + E6.2(12m.10) + E6.2 + E7.2	**220 065**			E10 + E12 + E14 + E10m.12 + E6.2(12m.10) + E6.2 + E7.2	212 854
	E16 + E8.2mg + E18	**239 432**			E16 + E8.2mg + E18	224 822
1	Brush holder	219 423		500	Countersunk screw M4x12	023 062
2	Brush clamp	213 010		501	Hexagon nut M8	020 856
3	Threaded rod	209 740		502	Adjusting washer	023 348
				503	Locking ring 5x0.6	023 347

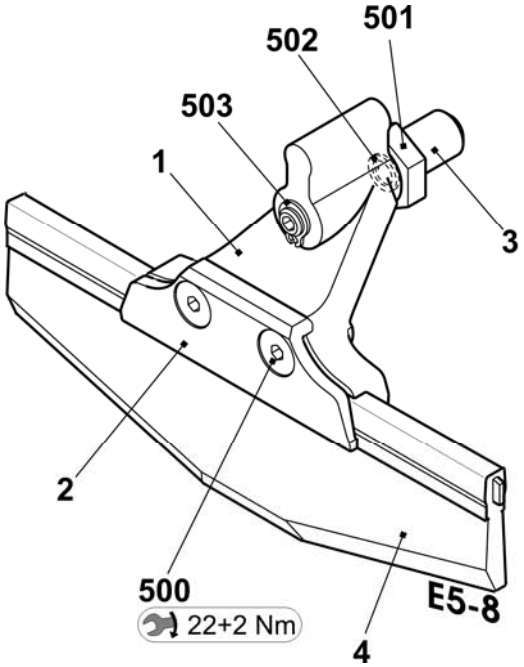

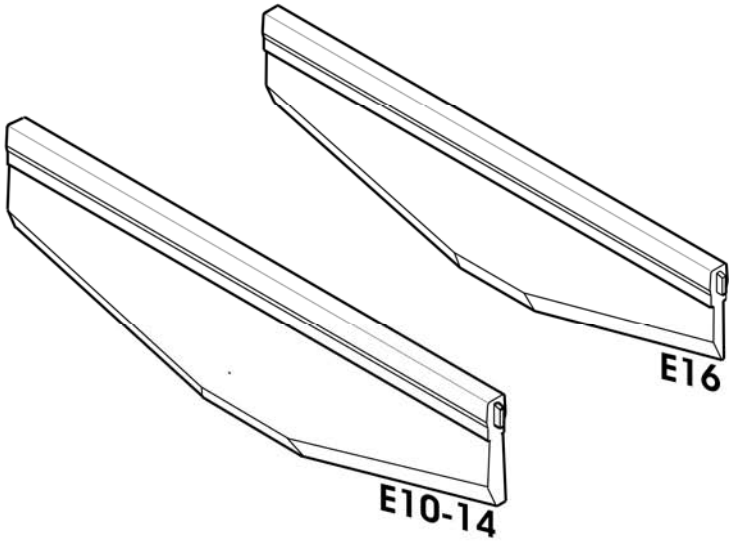

Yarn carrier driving without guiding part

Pos	Designation	ID	Pos	Designation	ID
Σ	**YC driving outside co.**	**241 080**			
1	Yarn carrier plunger co.	242 214	500	Cap screw M4x14-I-Torx	242 279
2	Support angle for jack	241 038	501	Cap screw M3x12-12.9	022 648
3	Card yarn carrier final stages OKC	300 960	900	Cap screw M6x14	022 658
4	Support angle for YC driving	242 903	901	Shoulder screw	231 899

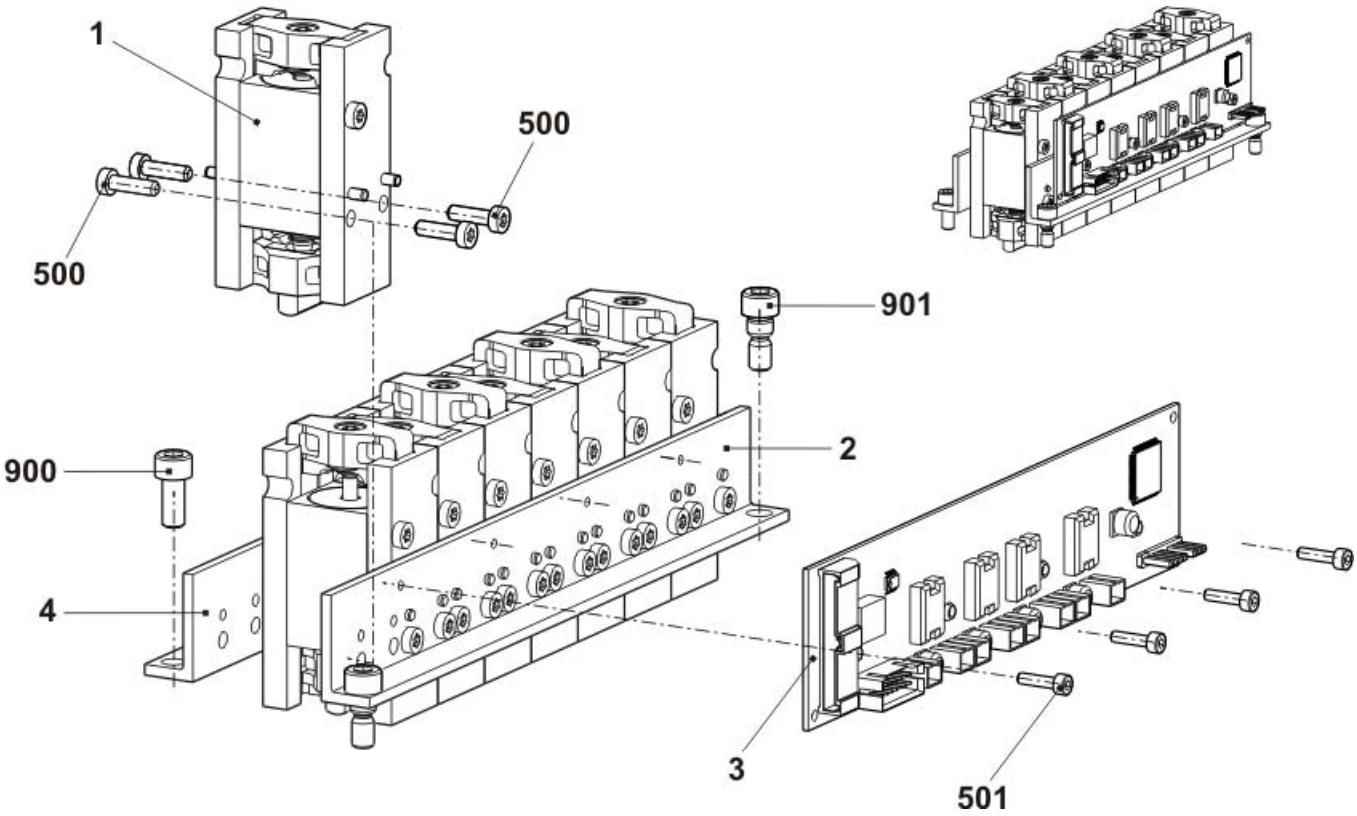

Yarn carrier driving with guiding part

Pos	Designation	ID		Pos	Designation	ID
Σ	**YC driving in the middle co.**	**241 081**				
1	Yarn carrier plunger co.	242 214		500	Cap screw M4x14-I-Torx	242 279
2	Support angle for jack	241 038		501	Cap screw M3x12-12.9	022 648
3	Support angle for YC driving	241 044		502	Screw KB60X20	243 625
4	Card yarn carrier final stages OKC	300 960		900	Cap screw M6x14	022 658
5	Guiding part	239 972		901	Shoulder screw	231 899

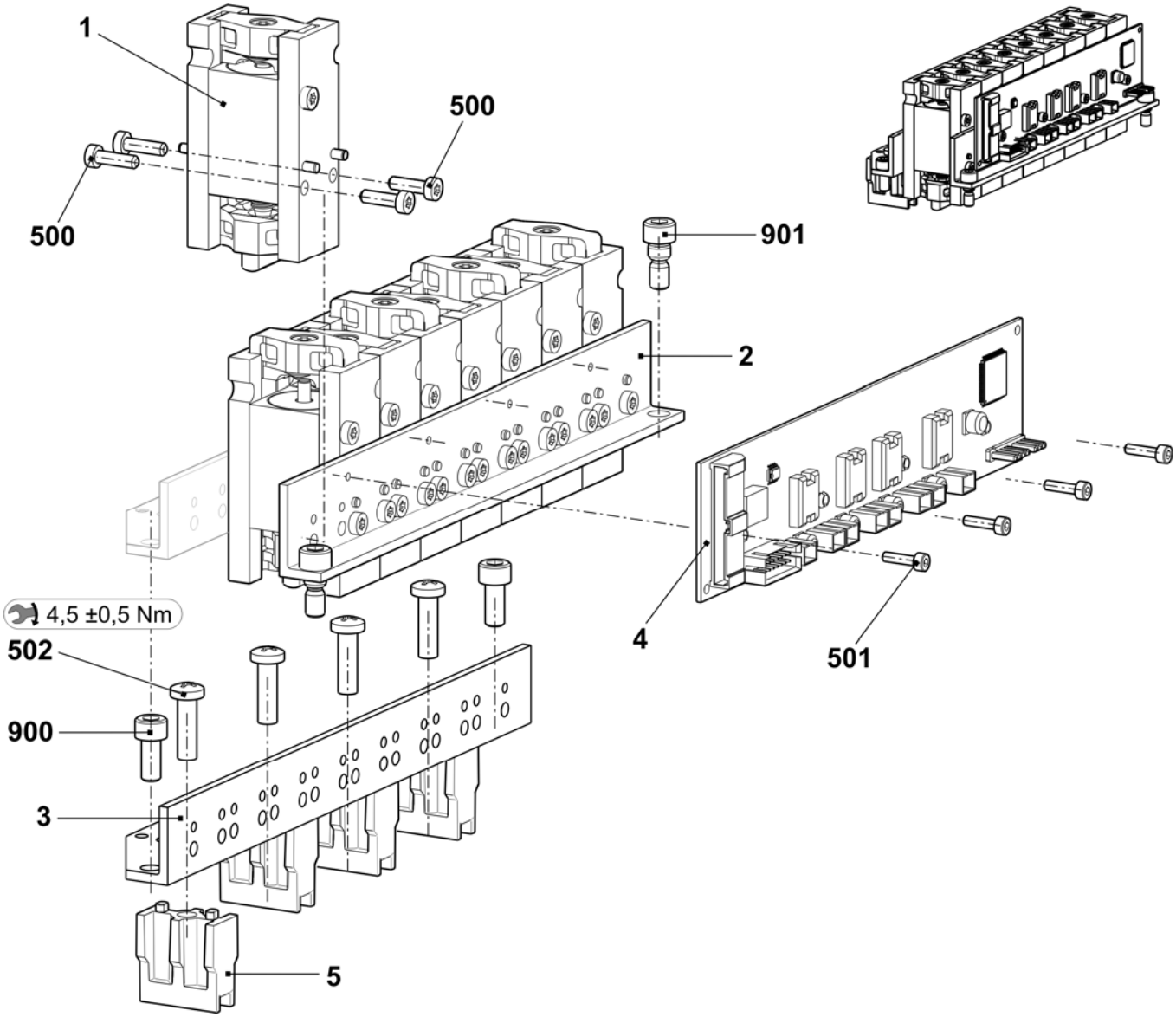

Holding-down jack control

Pos	Designation	ID	Pos	Designation	ID
Σ	**Holding-down jack control co.**		1	Jack cam box	
	E5 + E5m.4 + E2,5.2 + E3,5.2kw	**250 991**		E5 + E5m.4 + E2,5.2 + E3,5.2kw	250 981
	E7 + E8 + E7m.5 + E7m.8 + E8m.7 + E3,5.2mg + E5.2mg	**250 989**		E7 + E8 + E7m.5 + E7m.8 + E8m.7 + E3,5.2mg + E5.2mg	250 980
	E10 + E10m.12	**250 984**		E10 + E10m.12	250 976
	E5.2kw + E6.2kw	**250 988**		E5.2kw + E6.2kw	250 979
	E12 + E14+ E6.2 (12m.10) + E6.2mg	**250 986**		E12 + E14+ E6.2 (12m.10) + E6.2mg	250 977
	E7.2kw	**250 180**		E7.2kw	250 181
	E7.2mg	**250 992**		E7.2mg	250 982
	E16 + E18 + E8.2mg	**250 987**		E16 + E18 + E8.2mg	250 978
2	Control slide co.	239 363	500	Cap screw M6x12	020 134
3	Control unit holding-down jacks	239 342	501	Countersunk screw M4x6	023 427
4	Cover plate	221 272	502	Shim 0.05x19x22	251 878

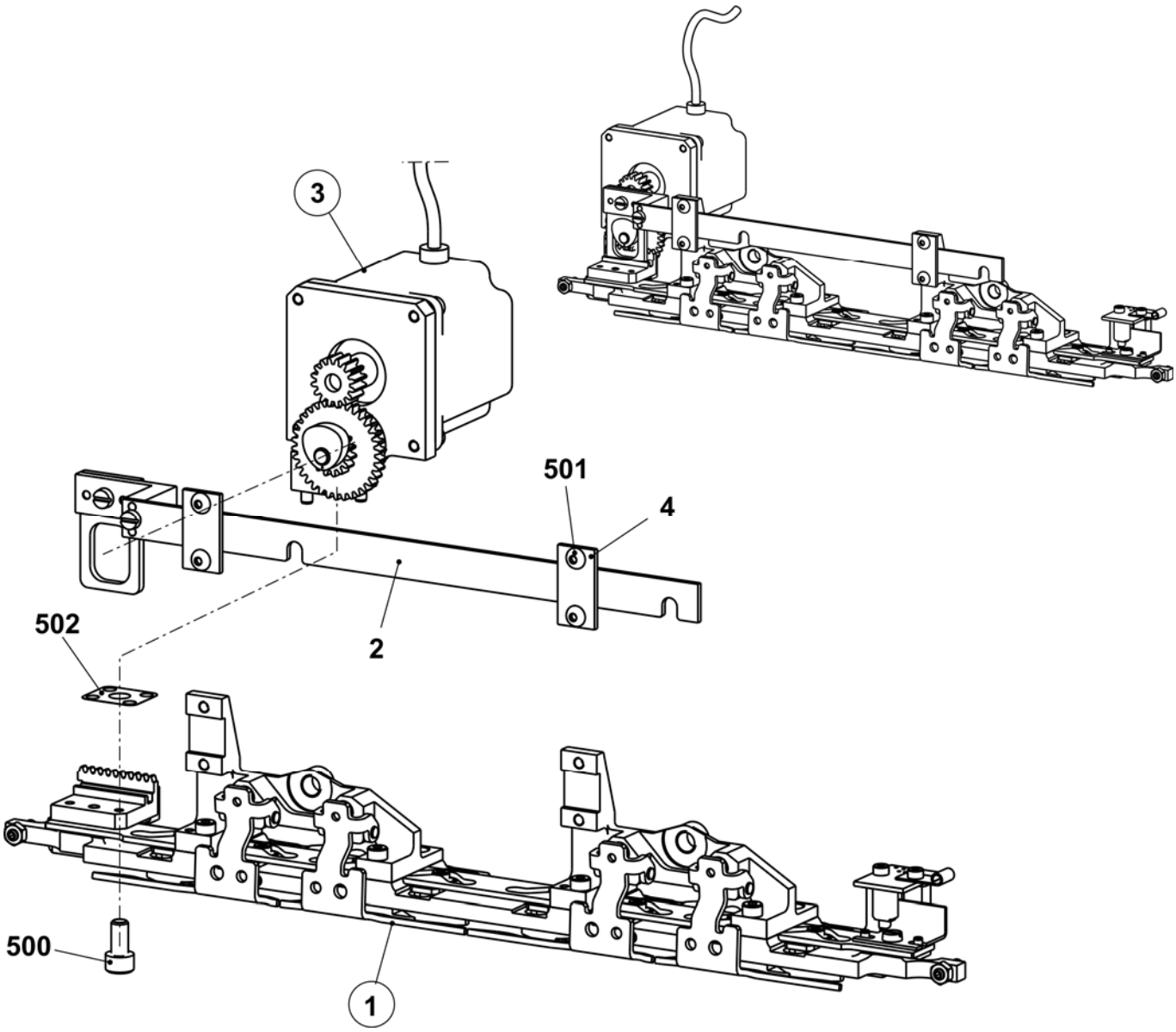

Jack cam box E5 + E5m.4 + E2,5.2 + E3,5.2kw

Pos	*Designation*	*ID*	*Pos*	*Designation*	*ID*
Σ	**Jack cam box co. E5 + E5m.4 + E2,5.2 + E3,5.2kw**	**250 981**	11	Card photoelectric sensor NP V2	240 243
			12	Control slide co. E2,5.2-8	253 568
1	Jack cam box plate	250 078	13	Cap bush	225 855
2	Jack slider on the left E2,5.2 + 5	245 015	14	Covering plate	254 958
3	Jack slider on the right E2,5.2 + 5	245 016	500	Cap screw M4x12	022 664
4	Intermediate plate	239 423	501	Cap screw M3x6	022 589
5	Eccentric	239 344	502	Hexagon nut M4-6	022 536
6	Covering plate	250 178	503	Countersunk screw M3x6	020 286
7	Support co.	250 577	504	Cap screw M3x6	020 005
8	Floating cam on the left E2,5.2 + 5	245 017	505	Fastening clamp	008 321
9	Floating cam on the right E2,5.2 + 5	245 014	506	Hexagon nut M5-04	020 854
10	Set screw	241 936	507	Countersunk screw M4x10	241 914

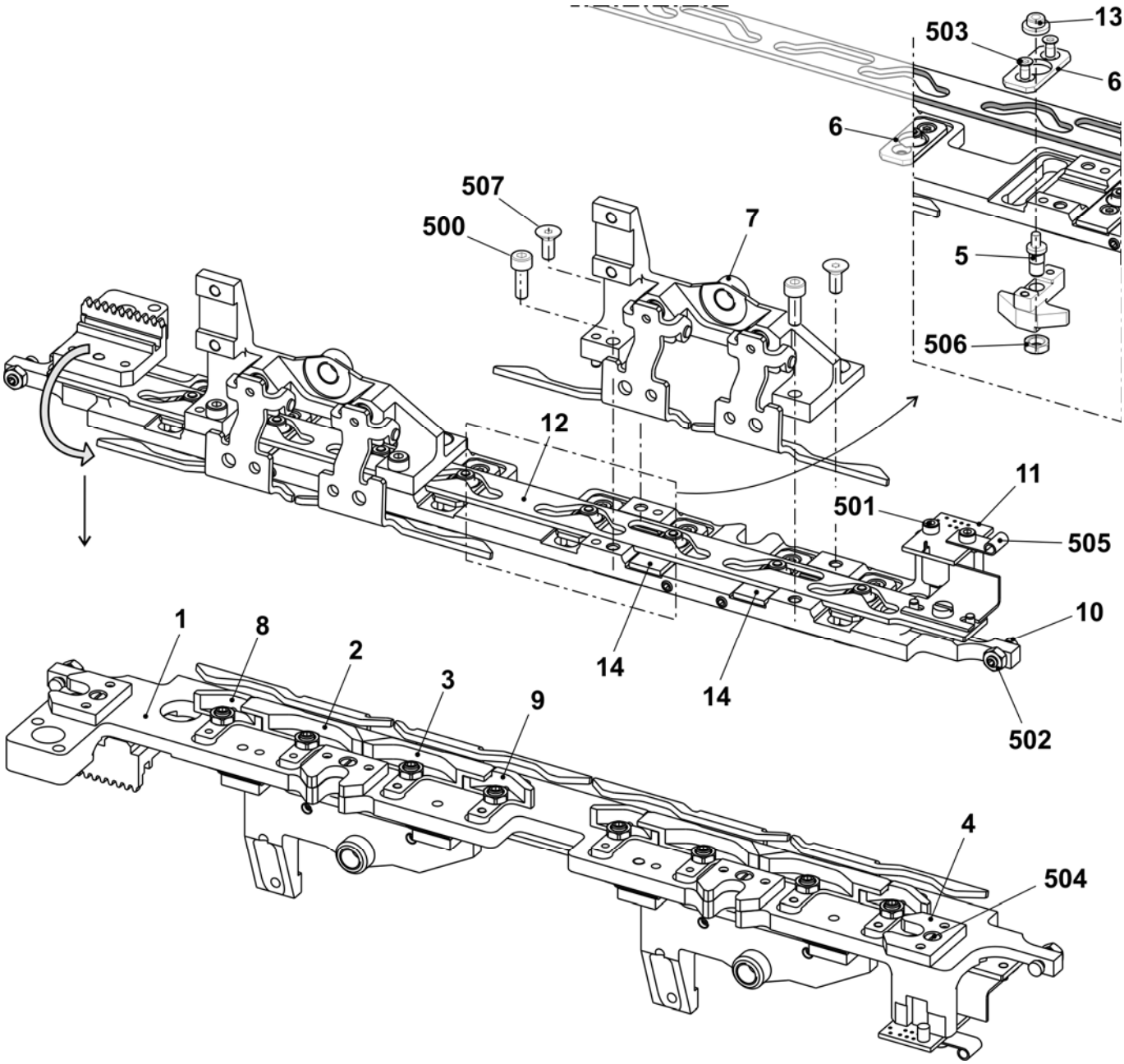

Jack cam box E7 + E8 + E7m.5 + E7m.8 + E8m.7 + E3,5.2mg + E5.2mg

Pos	Designation	ID	Pos	Designation	ID
Σ	**Jack cam box co. E7 + E8 + E7m.5 + E7m.8 + E8m.7 + E3,5.2mg + E5.2mg**	**250 980**	11	Card photoelectric sensor NP V2	240 243
			12	Control slide co. E2,5.2-8	253 568
1	Jack cam box plate	250 078	13	Cap bush	225 855
2	Jack slider on the left E7-8 + 3,5.2mg	250 166	14	Covering plate	254 958
3	Jack slider on the right E7-8 + 3,5.2mg	250 167	500	Cap screw M4x12	022 664
4	Intermediate plate	239 423	501	Cap screw M3x6	022 589
5	Eccentric	239 344	502	Hexagon nut M4-6	022 536
6	Covering plate	250 178	503	Countersunk screw M3x6	020 286
7	Support co.	250 577	504	Cap screw M3x6	020 005
8	Floating cam on the left E7-8 + 3,5.2mg	250 164	505	Fastening clamp	008 321
9	Floating cam on the right E7-8 + 3,5.2mg	250 165	506	Hexagon nut M5-04	020 854
10	Set screw	241 936	507	Countersunk screw M4x10	241 914

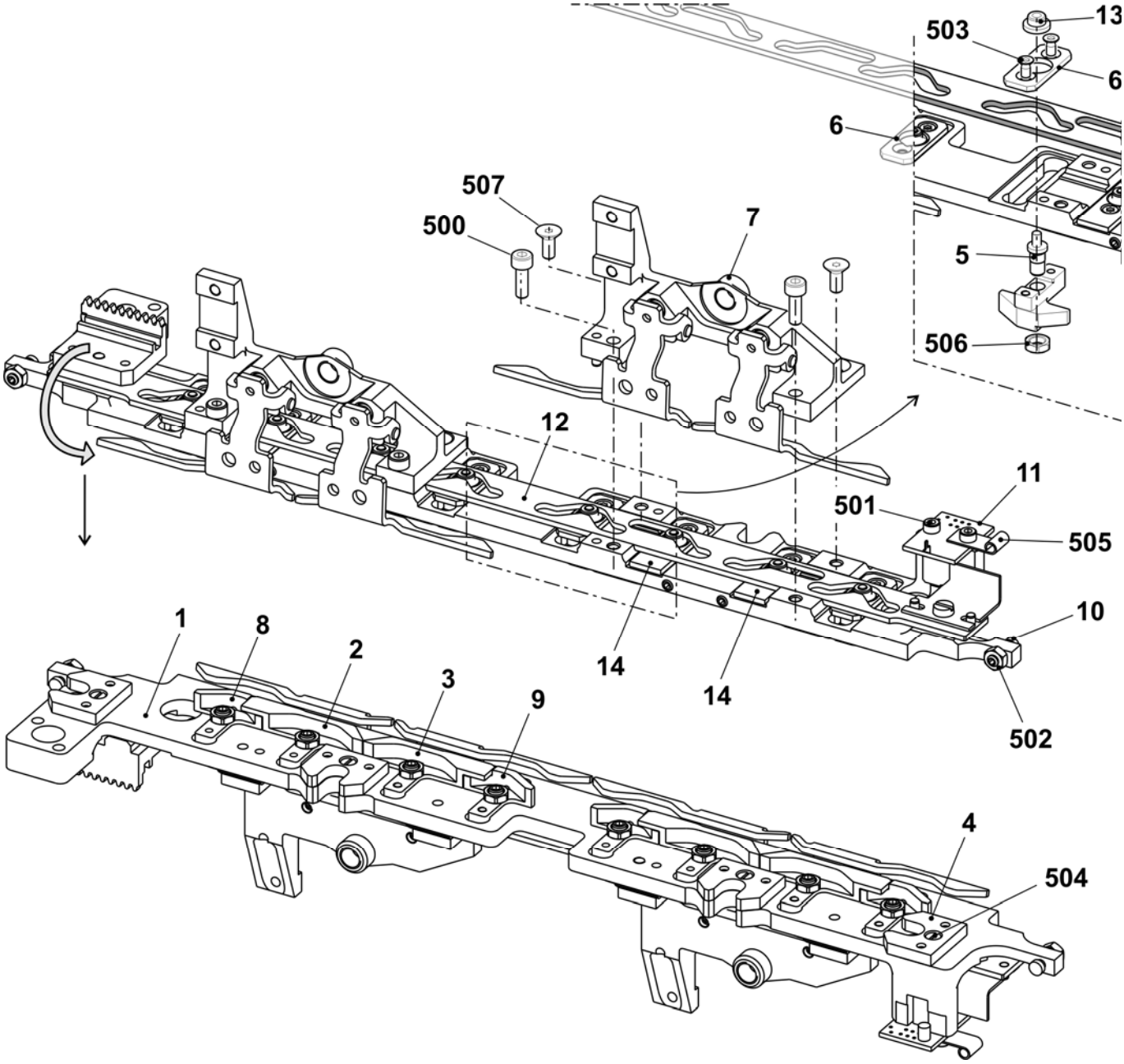

Jack cam box E10 + E10m.12

Pos	*Designation*	*ID*	*Pos*	*Designation*	*ID*
Σ	**Jack cam box E10 + E10m.12**	**250 976**	11	Card photoelectric sensor NP V2	240 243
			12	Control slider co. E10-14 + E16	239 421
1	Jack cam box plate	250 078	13	Cap bush	225 855
2	Jack slider on the left E10	250 158	14	Covering plate	254 421
3	Jack slider on the right E10	250 159	500	Cap screw M4x12	022 664
4	Intermediate plate	239 423	501	Cap screw M3x6	022 589
5	Eccentric	239 344	502	Hexagon nut M4-6	022 536
6	Covering plate	250 178	503	Countersunk screw M3x6	020 286
7	Support co.	250 577	504	Cap screw M3x6	020 005
8	Floating cam on the left E10	250 156	505	Fastening clamp	008 321
9	Floating cam on the right E10	250 157	506	Hexagon nut M5-04	020 854
10	Set screw	241 936	507	Countersunk screw M4x10	241 914

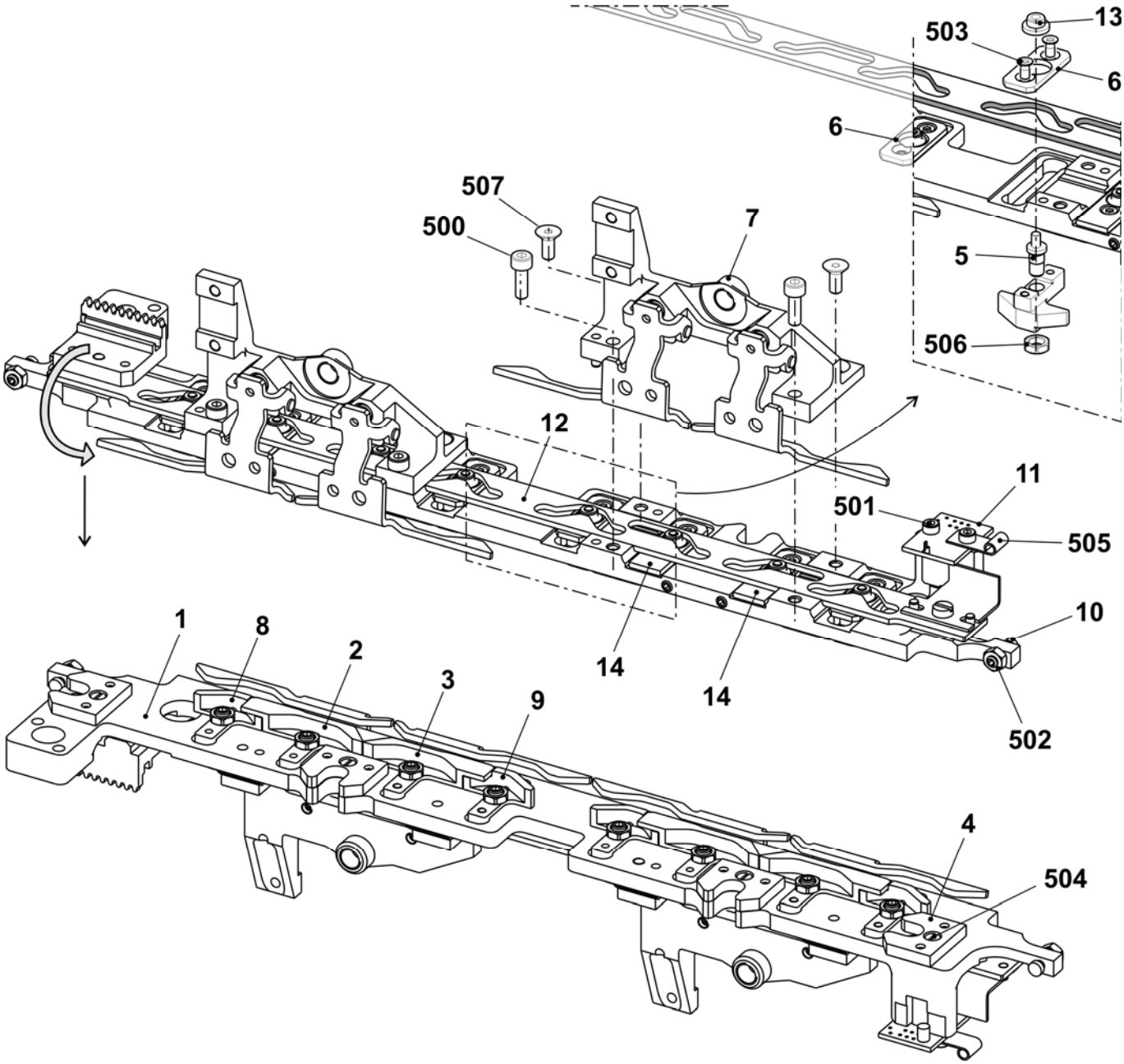

Jack cam box E12 + E14 + E6.2(E12m.10) + E6.2mg

Pos	Designation	ID	Pos	Designation	ID
Σ	**Jack cam box E12 + E14 + E6.2(E12m.10) + E6.2mg**	**250 977**	11	Card photoelectric sensor NP V2	240 243
			12	Control slider co. E10-14 + 16	239 421
1	Jack cam box plate	250 078	13	Cap bush	225 855
2	Jack slider at the left	250 170	14	Covering plate	254 421
3	Jack slider at the right	250 171	500	Cap screw M4x12	022 664
4	Intermediate plate	239 423	501	Cap screw M3x6	022 589
5	Eccentric	239 344	502	Hexagon nut M4-6	022 536
6	Covering plate	250 178	503	Countersunk screw M3x6	020 286
7	Support co.	250 577	504	Cap screw M3x6	020 005
8	Floating cam on the left E12-14 + 6.2	250 168	505	Fastening clamp	008 321
9	Floating cam on the right E12-14 + 6.2	250 169	506	Hexagon nut M5-04	020 854
10	Set screw	241 936	507	Countersunk screw M4x10	241 914

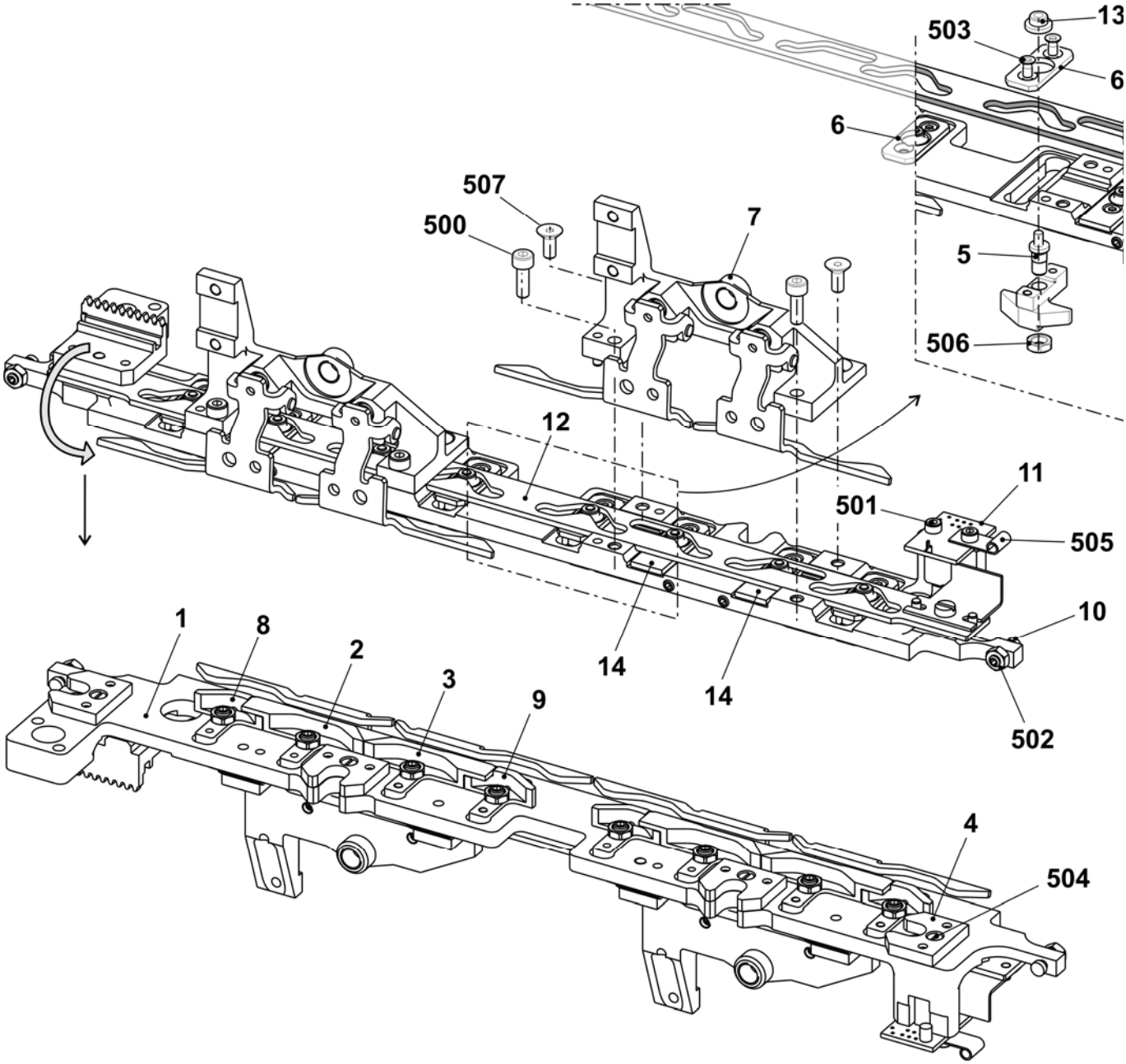

Jack cam box E16 + E18 + E8.2mg

Pos	*Designation*	*ID*	*Pos*	*Designation*	*ID*
Σ	**Jack cam box co. E16 + E18 + E8.2mg**	**250 978**	11	Card photoelectric sensor NP V2	240 243
			12	Control slider co. E10-14 + 16	239 421
1	Jack cam box plate	250 078	13	Cap bush	225 855
2	Jack slider on the left E16	250 155	14	Covering plate	251 465
3	Jack slider on the right E16	245 019	500	Cap screw M4x12	022 664
4	Intermediate plate	239 423	501	Cap screw M3x6	022 589
5	Eccentric	239 344	502	Hexagon nut M4-6	022 536
6	Covering plate	250 178	503	Countersunk screw M3x6	020 286
7	Support co.	250 577	504	Cap screw M3x6	020 005
8	Floating cam on the left E16	250 154	505	Fastening clamp	008 321
9	Floating cam on the right E16	245 018	506	Hexagon nut M5-04	020 854
10	Set screw	241 936	507	Countersunk screw M4x10	241 914

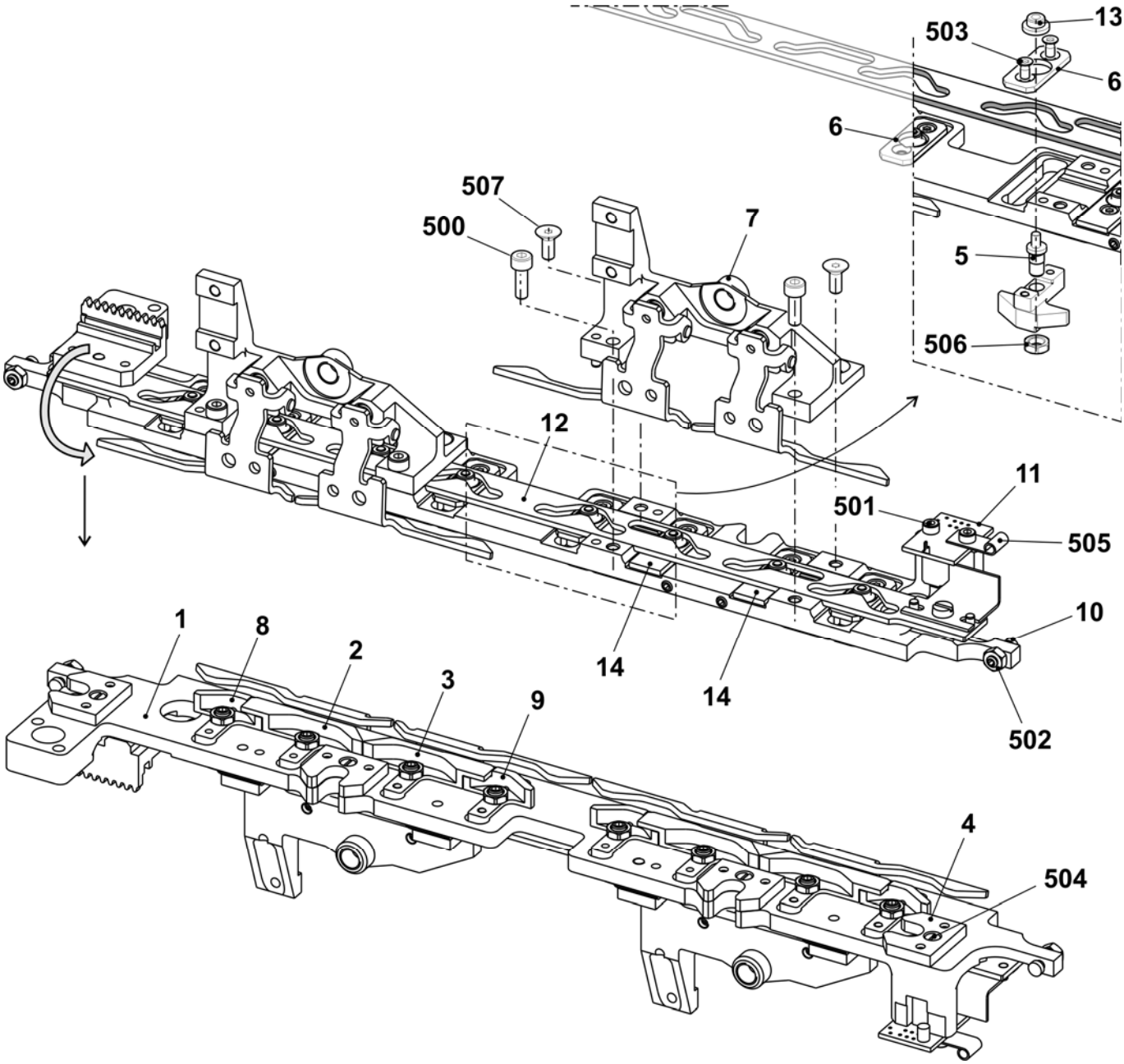

Jack cam box E5.2kw + E6.2kw

Pos	Designation	ID	Pos	Designation	ID
Σ	**Jack cam box co. E5.2kw + 6.2kw**	**250 979**	11	Card photoelectric sensor NP V2	240 243
			12	Control slide co. E2,5.2-8	253 568
1	Jack cam box plate	250 078	13	Cap bush	225 855
2	Jack slider on the left E5.2+ 6.2	250 162	14	Covering plate	254 958
3	Jack slider on the right E5.2+ 6.2	250 163	500	Cap screw M4x12	022 664
4	Intermediate plate	239 423	501	Cap screw M3x6	022 589
5	Eccentric	239 344	502	Hexagon nut M4-6	022 536
6	Covering plate	250 178	503	Countersunk screw M3x6	020 286
7	Support co.	250 577	504	Cap screw M3x6	020 005
8	Floating cam at the left	250 160	505	Fastening clamp	008 321
9	Floating cam on the right E5.2+ 6.2	250 161	506	Hexagon nut M5-04	020 854
10	Set screw	241 936	507	Countersunk screw M4x10	241 914

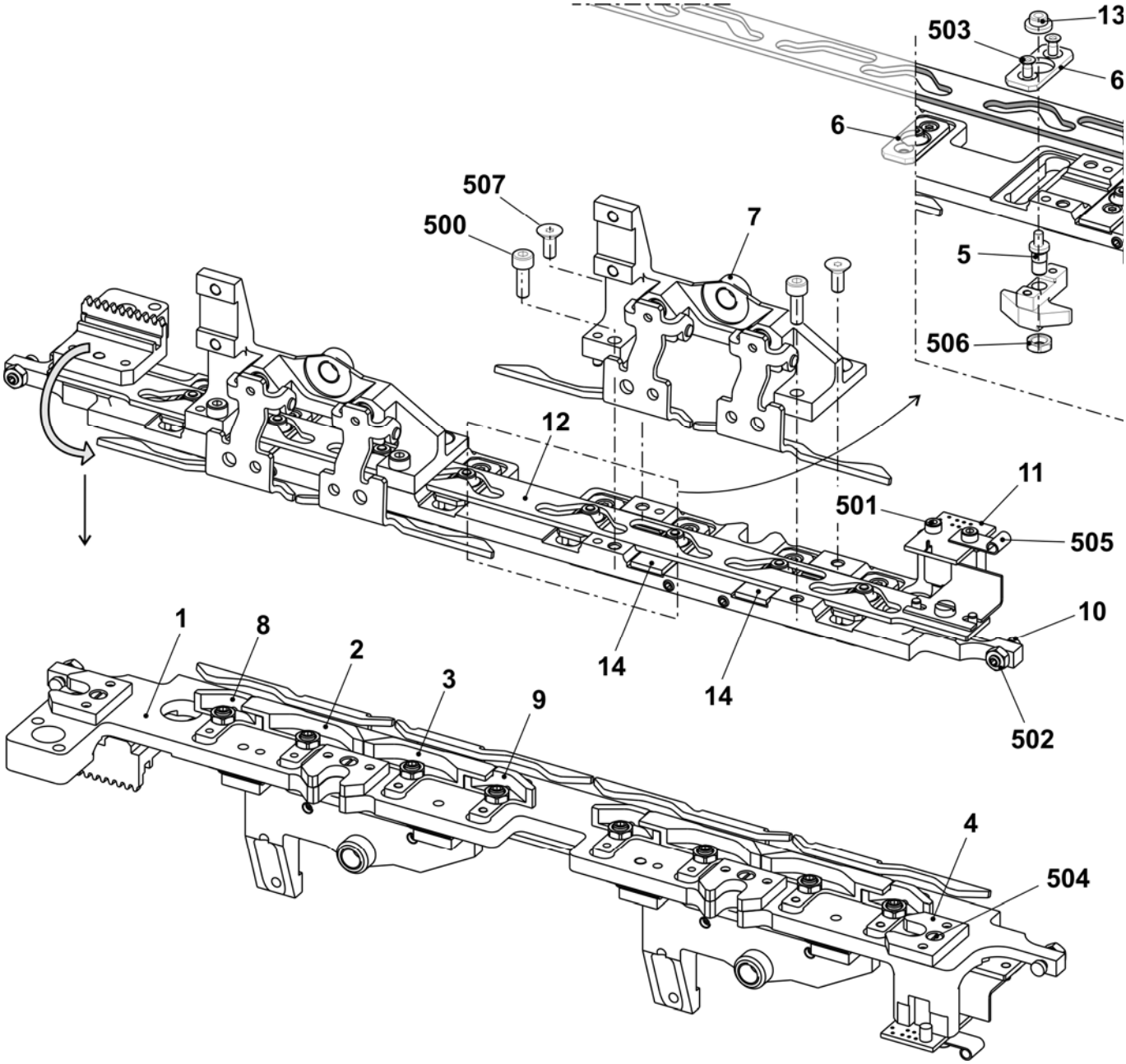

Jack cam box E7.2kw

Pos	*Designation*	*ID*	*Pos*	*Designation*	*ID*
Σ	**Jack cam box co. E7.2 kw**	**250 181**	11	Card photoelectric sensor NP V2	240 243
			12	Control slide co. E2,5.2-8	253 568
1	Jack cam box plate	250 078	13	Cap bush	225 855
2	Jack slider on the left E7.2	244 978	14	Covering plate	251 465
3	Jack slider on the right E7.2	244 972	500	Cap screw M4x12	022 664
4	Intermediate plate	239 423	501	Cap screw M3x6	022 589
5	Eccentric	239 344	502	Hexagon nut M4-6	022 536
6	Covering plate	250 178	503	Countersunk screw M3x6	020 286
7	Support co.	250 577	504	Cap screw M3x6	020 005
8	Floating cam on the left E7.2	244 976	505	Fastening clamp	008 321
9	Floating cam on the right E7.2	244 970	506	Hexagon nut M5-04	020 854
10	Set screw	241 936	507	Countersunk screw M4x10	241 914

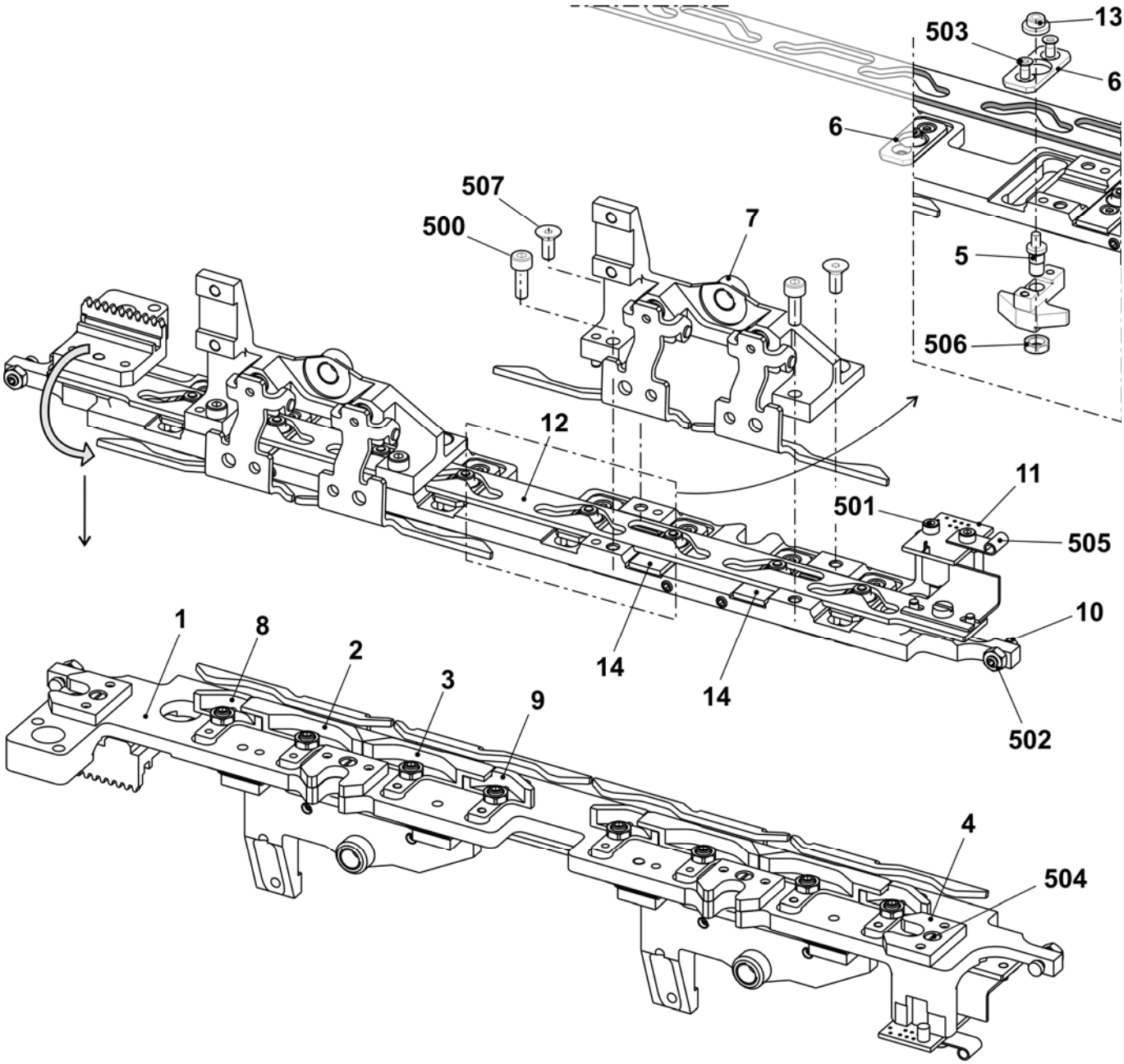

Jack cam box E7.2mg

Pos	Designation	ID	Pos	Designation	ID
Σ	**Jack cam box co. E7.2mg**	**250 982**	11	Card photoelectric sensor NP V2	240 243
			12	Control slider co. E10-14 + 16	239 421
1	Jack cam box plate	250 078	13	Cap bush	225 855
2	Jack slider on the left E7.2	250 174	14	Covering plate	254 421
3	Jack slider on the right E7.2	250 175	500	Cap screw M4x12	022 664
4	Intermediate plate	239 423	501	Cap screw M3x6	022 589
5	Eccentric	239 344	502	Hexagon nut M4-6	022 536
6	Covering plate	250 178	503	Countersunk screw M3x6	020 286
7	Support co.	250 577	504	Cap screw M3x6	020 005
8	Floating cam on the left E7.2	250 172	505	Fastening clamp	008 321
9	Floating cam on the right E7.2	250 173	506	Hexagon nut M5-04	020 854
10	Set screw	241 936	507	Countersunk screw M4x10	241 914

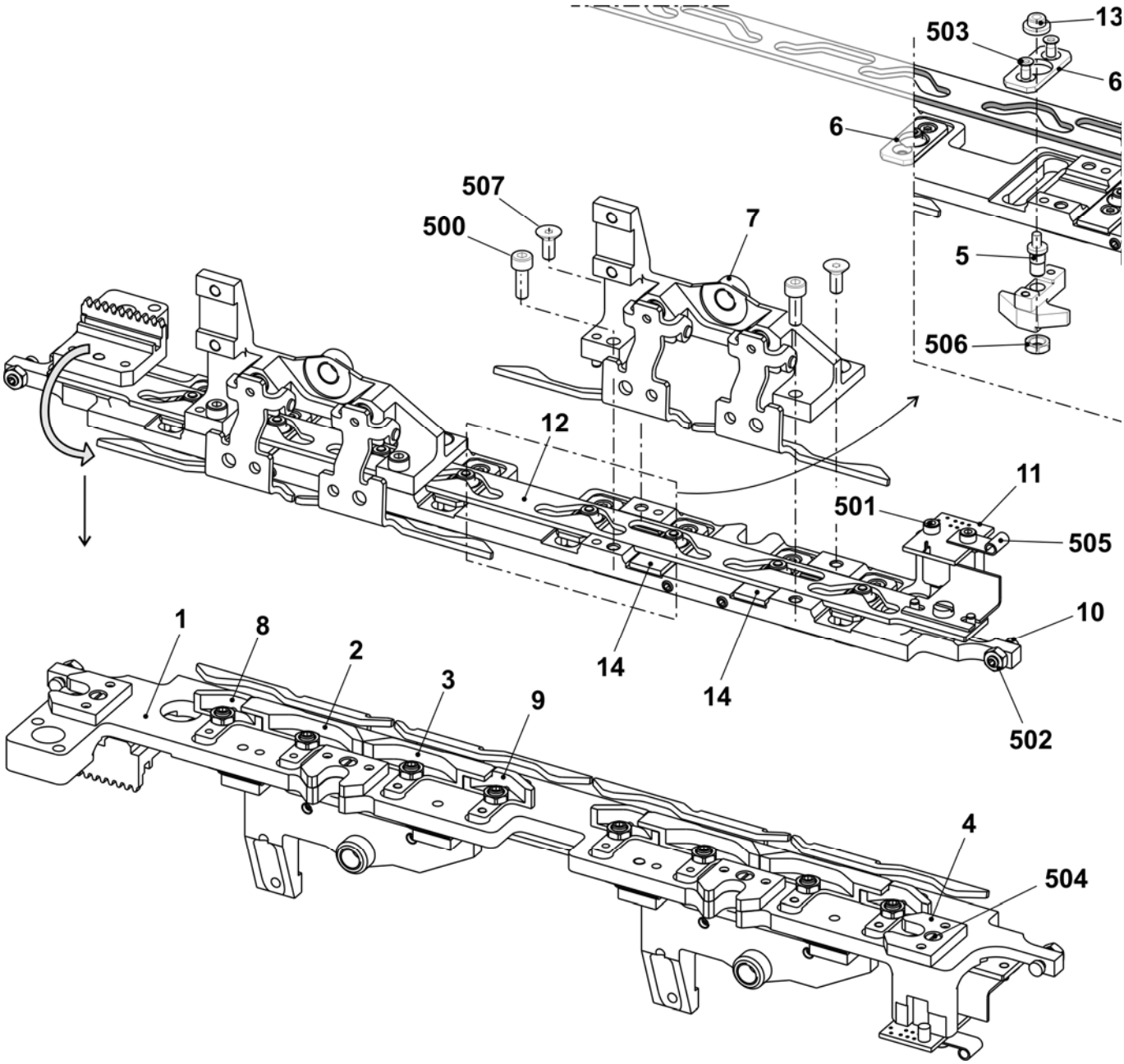

Support co.

Pos	Designation	ID		Pos	Designation	ID
Σ	**Support co.**	**250 577**		3	Set-out plate on the left	251 485
1	Support	251 192		500	Setting pin 4x22	020 663
2	Set-out plate on the right	251 484		501	Compression spring 0.8x5.0x12	250 693

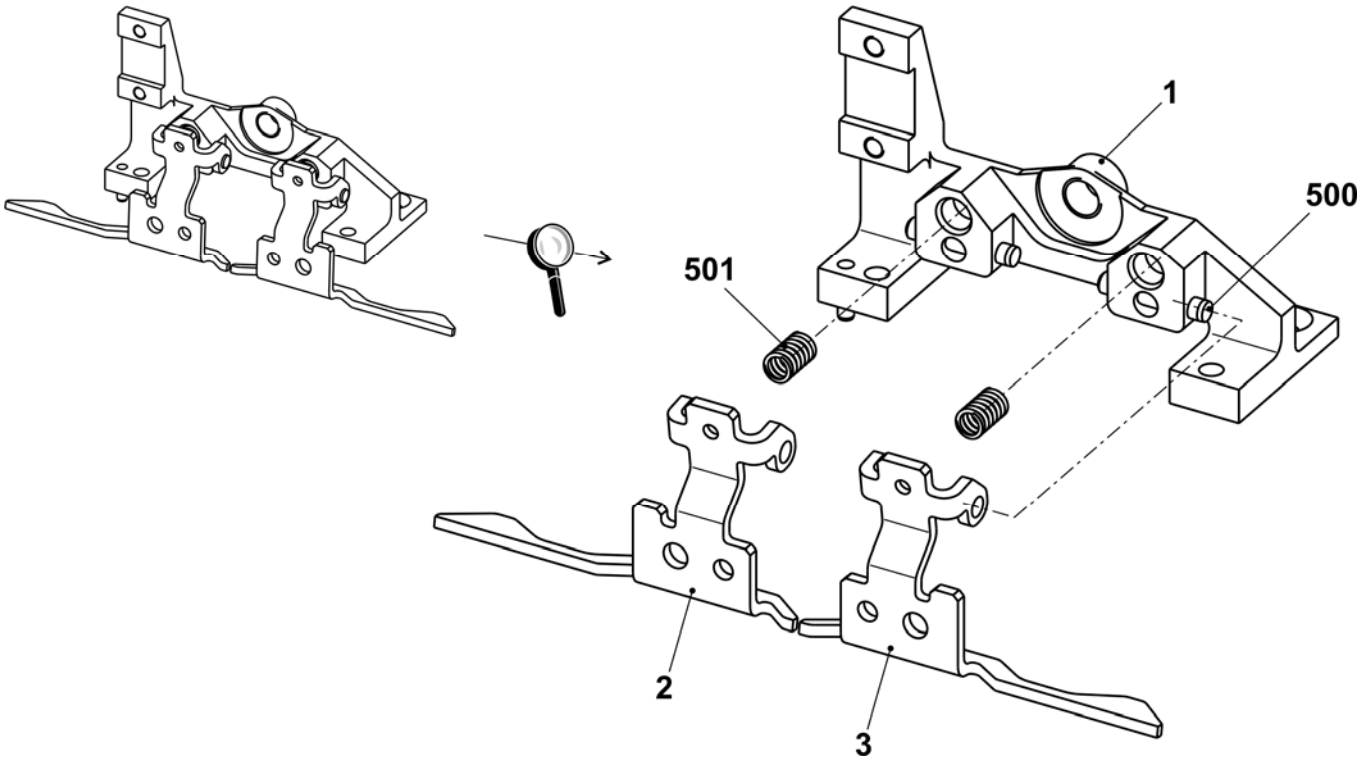

Control unit holding-down jacks

Pos	Designation	ID	Pos	Designation	ID
Σ	**Control unit holding-down jacks**	**239 342**			
1	Motor plate	239 336	501	Locking ring 6x0.7	023 298
2	Gear wheel co.	239 341	502	Washer 6.1x9x0.5	023 554
3	Motor co.	239 343	503	Ball bearing 6x10x3	023 533
500	Cap screw M4x12	022 664	504	Ball bearing 626-2RS	023 587

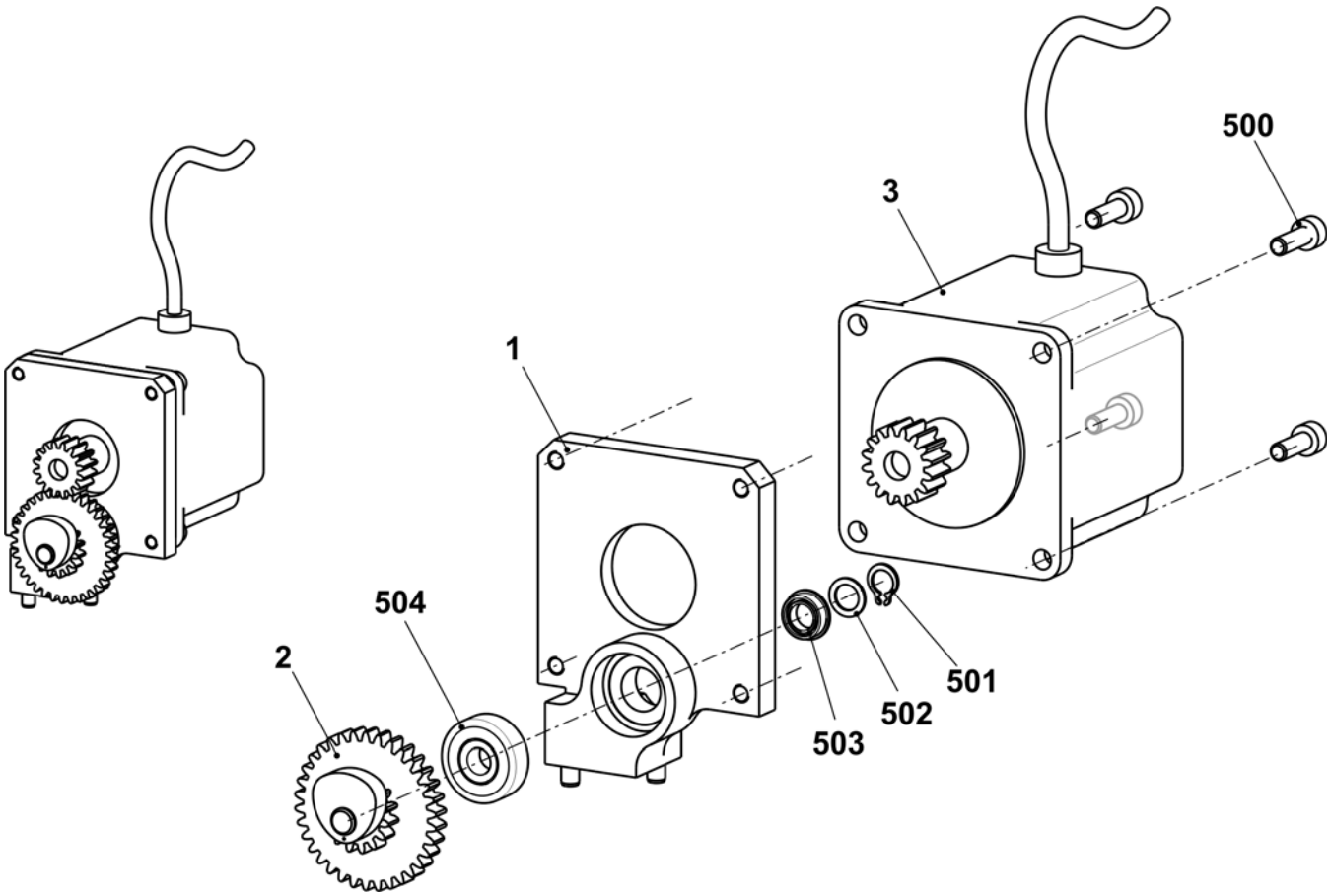

Needle detector

Pos	Designation	ID	Pos	Designation	ID
Σ	**Needle detector E5 + E7 + E8 + E10 + E12 + E14 E2,5.2 + E3,5.2 + E5.2 + E7.2 + E6.2(12m.10) + E5m.4 + E7m.5 + E7m.8 + E8m.7 + E10m.12**	**239 444**	**Σ**	**Needle detector E16 + E18 + E8.2**	**239 369**
1	Support needle stop	239 405	1	Support needle stop	239 405
2	Switching part	239 368	2	Switching part	239 368
3	Cable of needle detector co.	240 018	3	Cable of needle detector co.	240 018
4	Sensor pre-assembled E5-14	221 758	4	Sensor pre-assembled	239 324
500	Cap screw M2x8	022 954	500	Cap screw M2x8	022 954
501	Set screw M5x8	022 809	501	Set screw M5x8	022 809
502	Setting pin 4x16	020 660	502	Setting pin 4x16	020 660
503	Compression spring 4.3x0.45x10	021 398	503	Compression spring 4.3x0.45x10	021 398
504	Countersunk screw M4x6	023 427	504	Countersunk screw M4x6	023 427

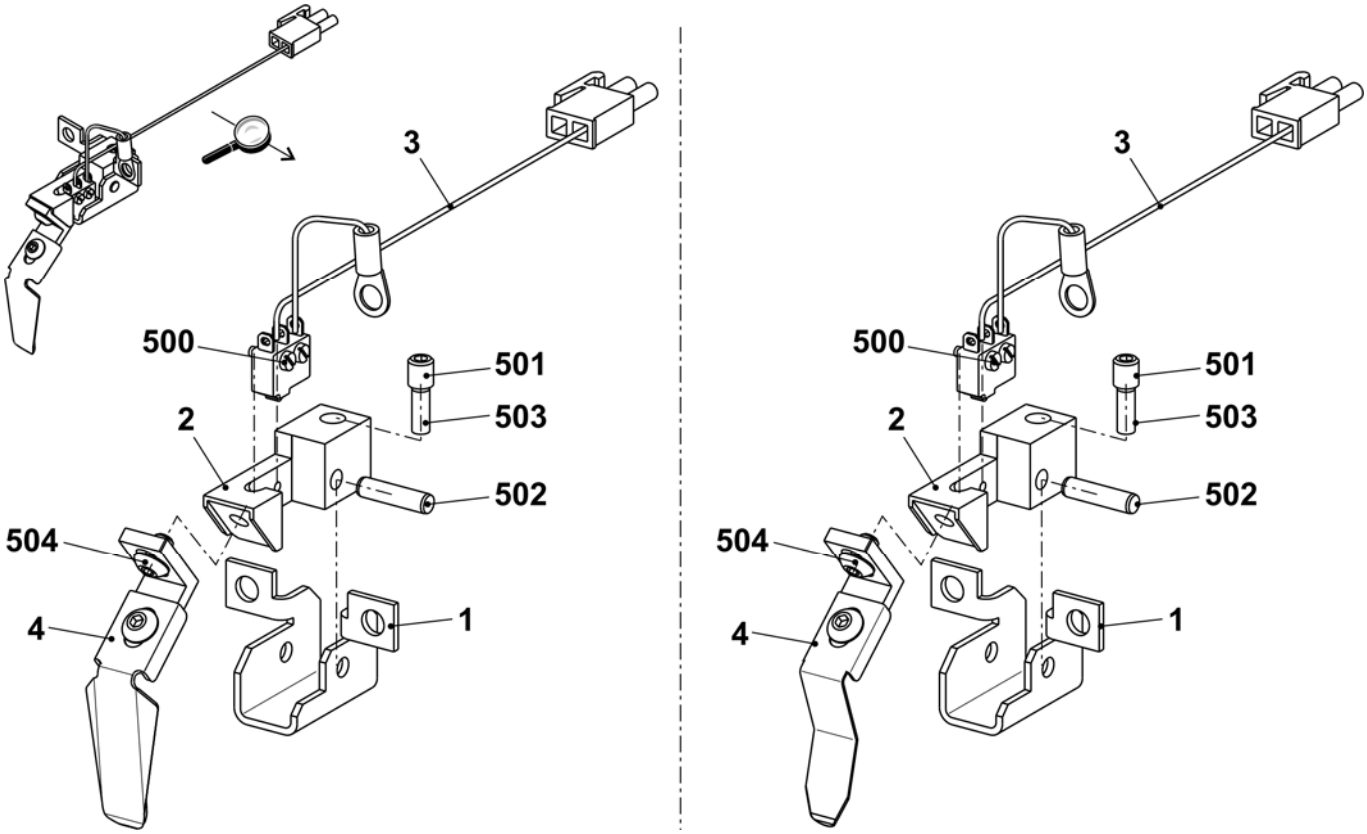

Cam box E5 + E5m.4 + E7m.5 + E2,5.2 + E3,5.2kw + E5.2

Pos	Designation		ID	Pos	Designation	ID
Σ	**Cam box set co. E5**		**244 239**	42	Switching piece	240 281
1	Cam plate		241 760	58	Shoulder screw	239 626
37	Stitch forming cam on the right co. E5-10		211 163	505	Shim 0.03x12x75	022 828
38	Stitch forming cam on the left co. E5-10		211 164	506	Shim 0.05x12x75	022 829
39	Rod guide element on the left		211 165	507	Shim 0.1x12x75	022 830
40	Rod guide element in the middle		211 166	508	Shim 0.2x12x75	022 831
41	Rod guide element on the right		211 168	509	Countersunk screw M3x4	023 142
	402	Spring rod	209 791			
	541	Disc 4.3x7x0.5	022 153			
	542	Circlip 3.2	021 019			
	543	Compression spring	023 344			

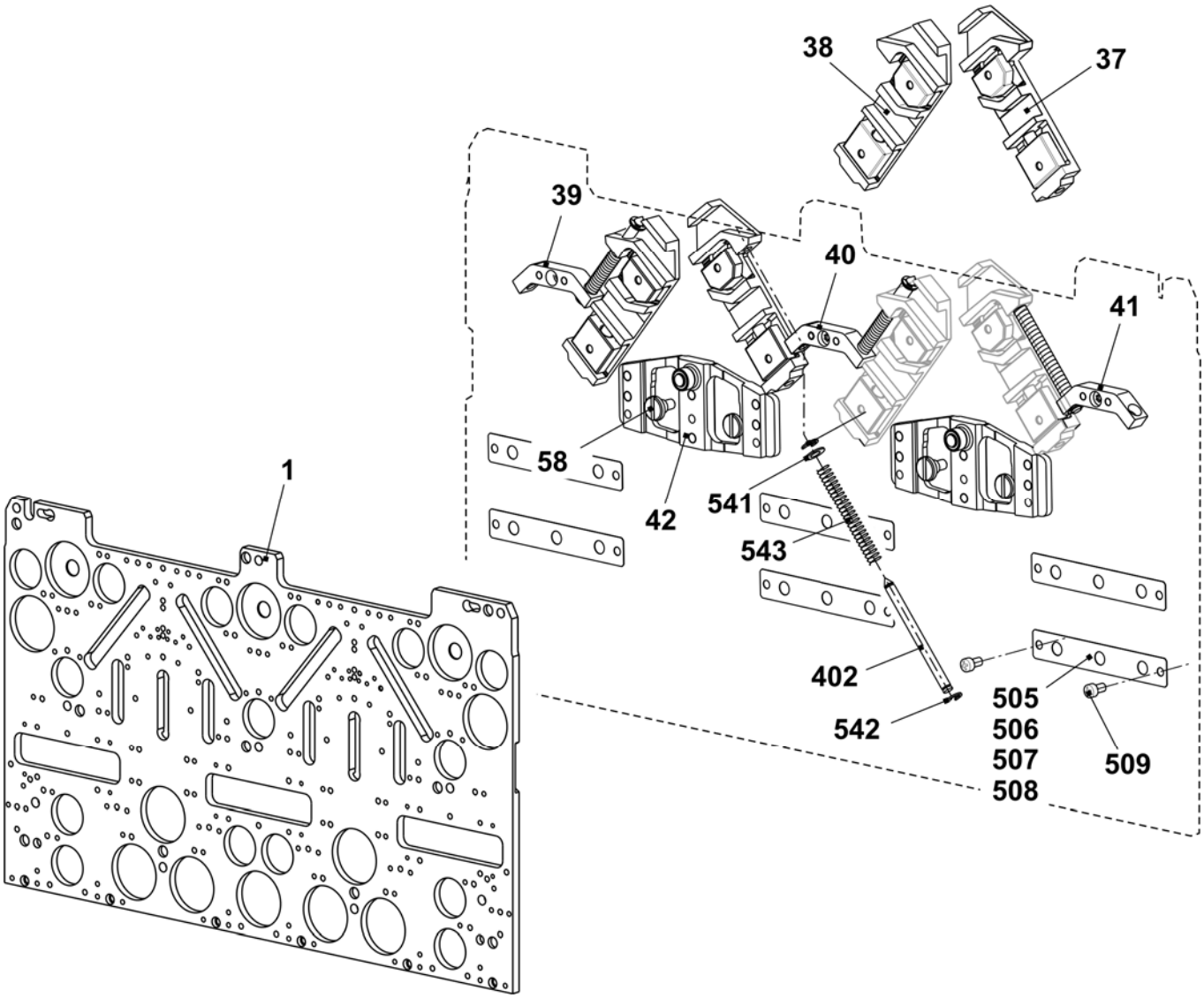

Cams E5 + E5m.4 + E7m.5 + E2,5.2 + E3,5.2kw + E5.2

Pos	*Designation*	*ID*	*Pos*	*Designation*	*ID*
2	Entry cam on the left	213 304	23	Selector cam	212 946
3	Entry cam on the right	213 303	24	Pressure part take-over on the left	239 848
4	Entry cam in the middle	210 285	25	Pressure part take-over on the right	239 849
5	Entry cam in the middle at the bottom E2,5.2 + E3,5.2 + E5 + E5.2	235 719	26	Tuck pressure part	239 621
			27	Limit cam on the left E5	210 289
6	Plate on the left	230 988	28	Limit cam on the right E5	210 290
7	Plate in the middle	231 035	29	Pointer E2,5.2 + E3,5.2	229 505
8	Plate on the right	231 036	30	Screw	210 335
9	Cam on the left	231 039	31	Stitch cam on the left E2,5.2 + E3,5.2 + E5 + E5.2	235 712
10	Cam on the right	231 041			
11	Cam in the middle	231 040	32	Stitch cam on the right E2,5.2 + E3,5.2 + E5 + E5.2	235 713
12	Cam	227 923			
13	Cam	210 254	33	Tuck limit cam E5	253 517
14	Cam on the left E5-14	212 265	34	Raising cam plate E4-12	204 372
15	Cam on the right E5-14	212 266	35	Receiving cam E5	210 386
16	Cam on the left	236 192	36	Raising cam without split E5	253 516
17	Cam on the right	236 193		Knitting raising cam with split E5 Accessories	255 174
18	Cam on the left E5-14	212 274	48	Cam on the right E5-14	212 275
19	Cam	210 252	49	Entry cam at the left at the bottom E2,5.2 + E3,5.2	235 718
20	Offering cam	210 185	50	Entry cam at the right at the bottom E2,5.2 + E3,5.2	235 720
21	Selector cam on the left	212 944	51	Shoulder screw	239 626
22	Selector cam on the right	212 947	500	Cap screw M4x8	020 091

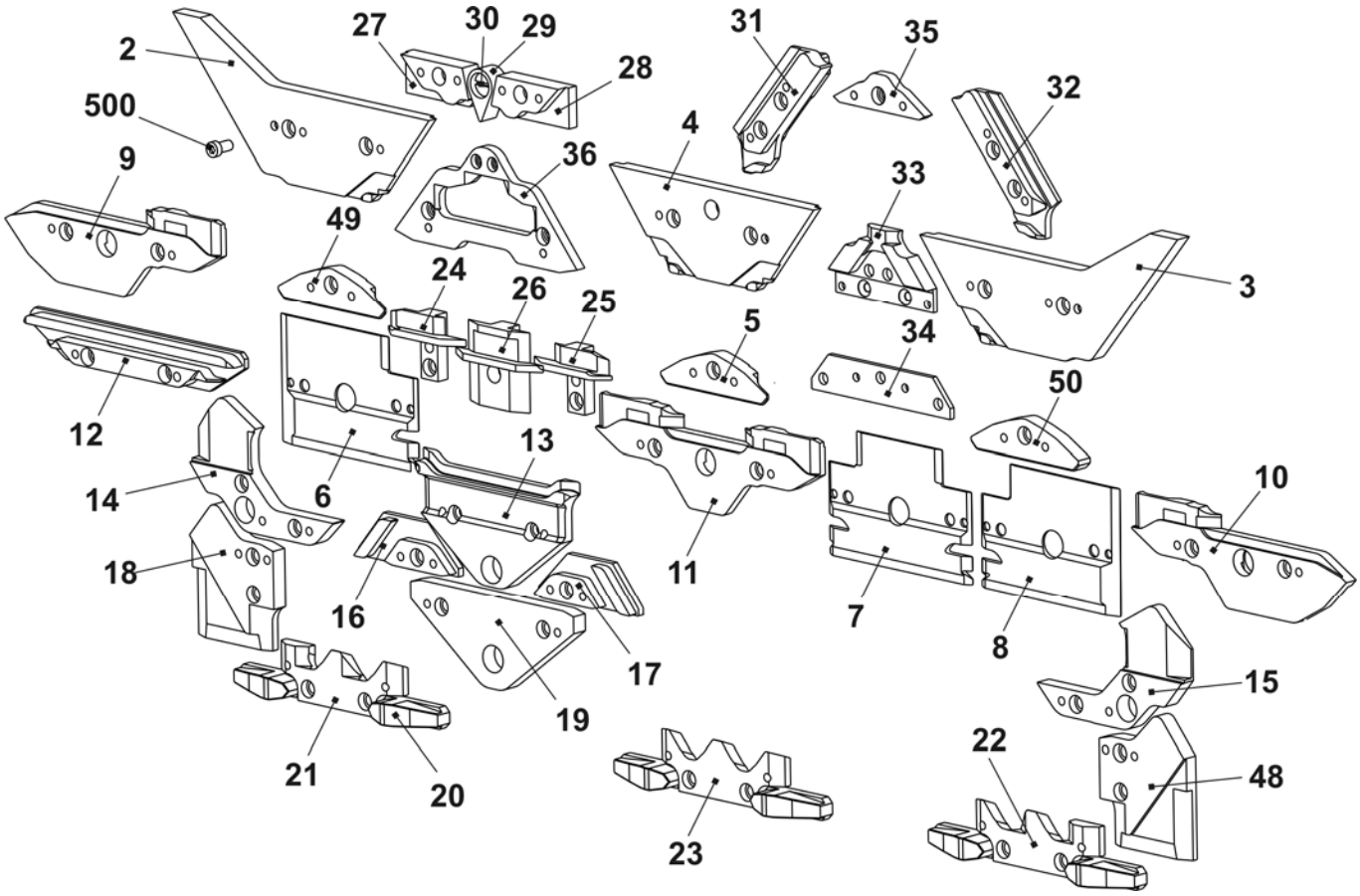

Cams for narrow coupling E5 + E7 + E8 + E5m.4 + E7m.5 + E7m.8 + E8m.7 + E2,5.2 + E3,5.2 + E5.2

Pos	*Designation*	*ID*		*Pos*	*Designation*	*ID*
2	Entry cam on the right E5-14	216 220		3	Entry cam on the left E5-14	216 221
14	Cam on the right E5-14	216 168		15	Cam on the left E5-14	216 167
18	Cam on the right	216 166		48	Cam on the left	216 165

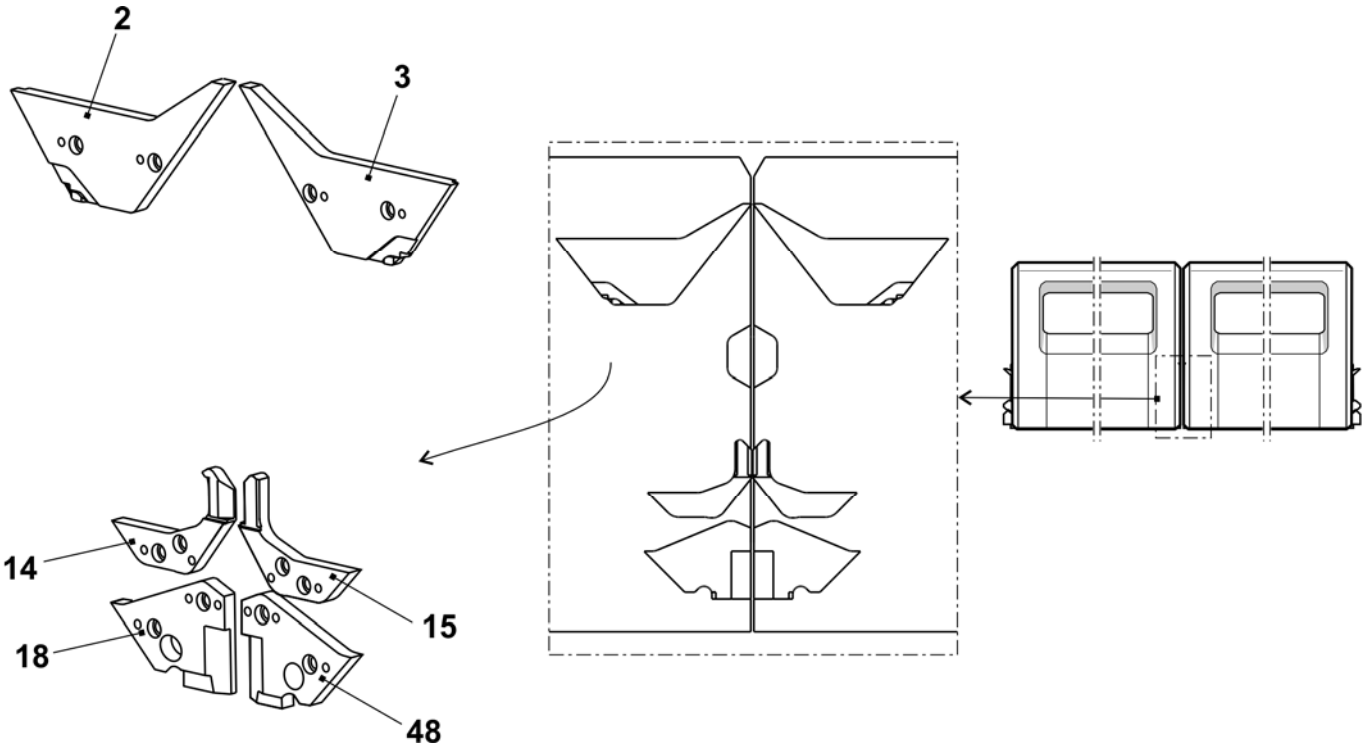

Cam box E7 + E8 + E7m.8 + E8m.7

Pos	Designation		ID	Pos	Designation	ID
Σ	**Cam box set co. E7- E8**		**244 389**	42	Switching piece	240 281
1	Cam plate		241 760	58	Shoulder screw	239 626
37	Stitch forming cam on the right co. E5-10		211 163	505	Shim 0.03x12x75	022 828
38	Stitch forming cam on the left co. E5-10		211 164	506	Shim 0.05x12x75	022 829
39	Rod guide element on the left		211 165	507	Shim 0.1x12x75	022 830
40	Rod guide element in the middle		211 166	508	Shim 0.2x12x75	022 831
41	Rod guide element on the right		211 168	509	Countersunk screw M3x4	023 142
	402	Spring rod	209 791			
	541	Disc 4.3x7x0.5	022 153			
	542	Circlip 3.2	021 019			
	543	Compression spring	023 344			

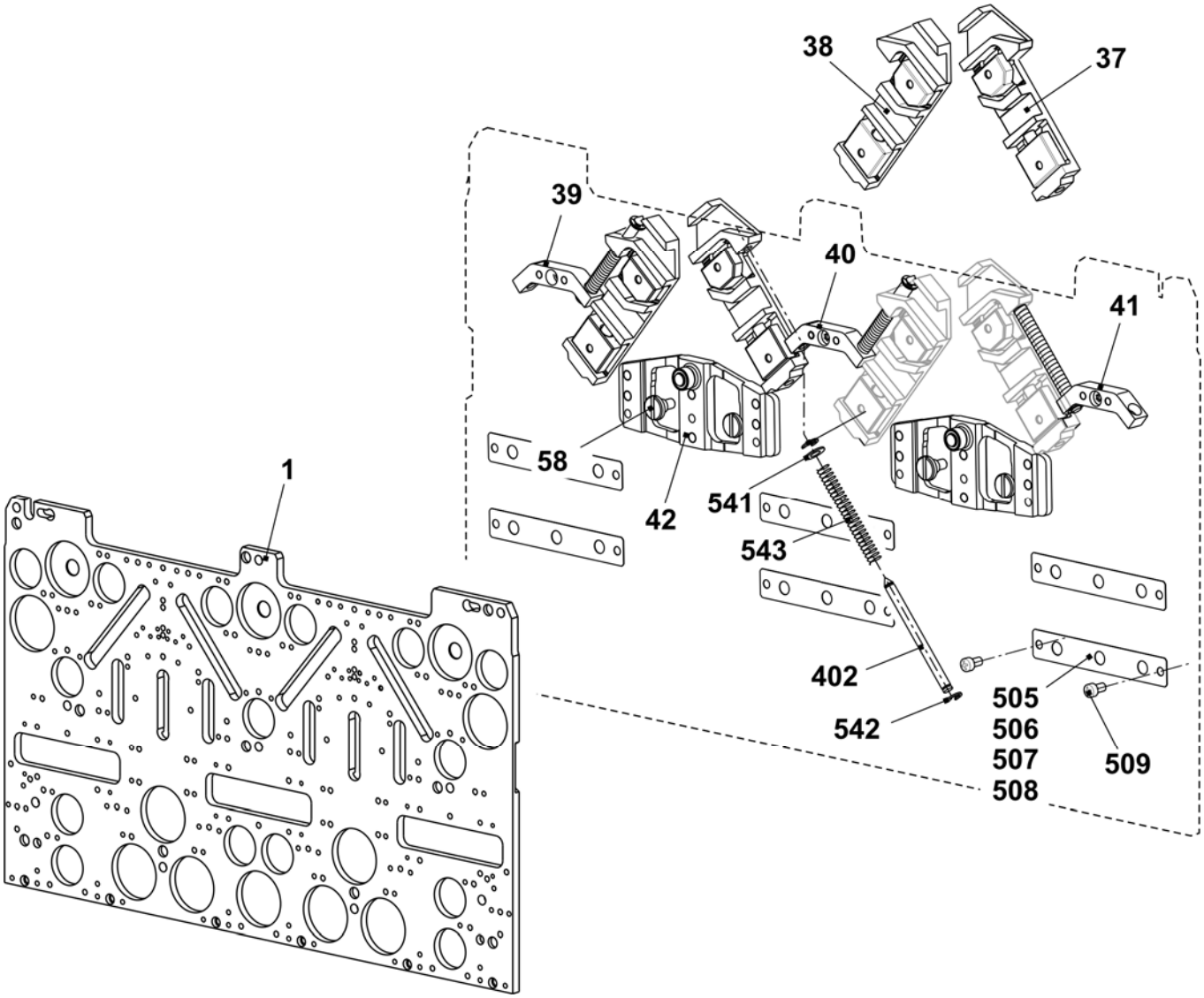

STOLL
THE RIGHT WAY TO KNIT

Cams E7 + E8 + E7m.8 + E8m.7

Pos	Designation	ID	Pos	Designation	ID
2	Entry cam on the left	213 304	23	Selector cam	212 946
3	Entry cam on the right	213 303	24	Pressure part take-over on the left	239 848
4	Entry cam in the middle	210 285	25	Pressure part take-over on the right	239 849
5	Entry cam at the bottom E5-8	212 395	26	Tuck pressure part	239 621
6	Plate on the left	230 988	27	Limit cam on the left E7-8	210 291
7	Plate in the middle	231 035	28	Limit cam on the right E7-8	210 292
8	Plate on the right	231 036	29	Pointer E5-8	210 336
9	Cam on the left	231 039	30	Screw	210 335
10	Cam on the right	231 041	31	Stitch cam on the left E7-8	210 324
11	Cam in the middle	231 040	32	Stitch cam on the right E7-8	210 323
12	Cam	227 923	33	Tuck limit cam E7-8	255 056
13	Cam	210 254	34	Raising cam plate E4-12	204 372
14	Cam on the left E5-14	212 265	35	Receiving cam E7-8	210 339
15	Cam on the right E5-14	212 266	36	Raising cam without split E7-8	255 055
16	Cam on the left	236 192		Raising cam with split E7-8 Accessory	255 192
17	Cam on the right	236 193			
18	Cam on the left E5-14	212 274	48	Cam on the right E5-14	212 275
19	Cam	210 252	49	Entry cam on the left E5-8	213 161
20	Offering cam	210 185	50	Entry cam on the right E5-8	213 162
21	Selector cam on the left	212 944	500	Cap screw M4x8	020 091
22	Selector cam on the right	212 947			

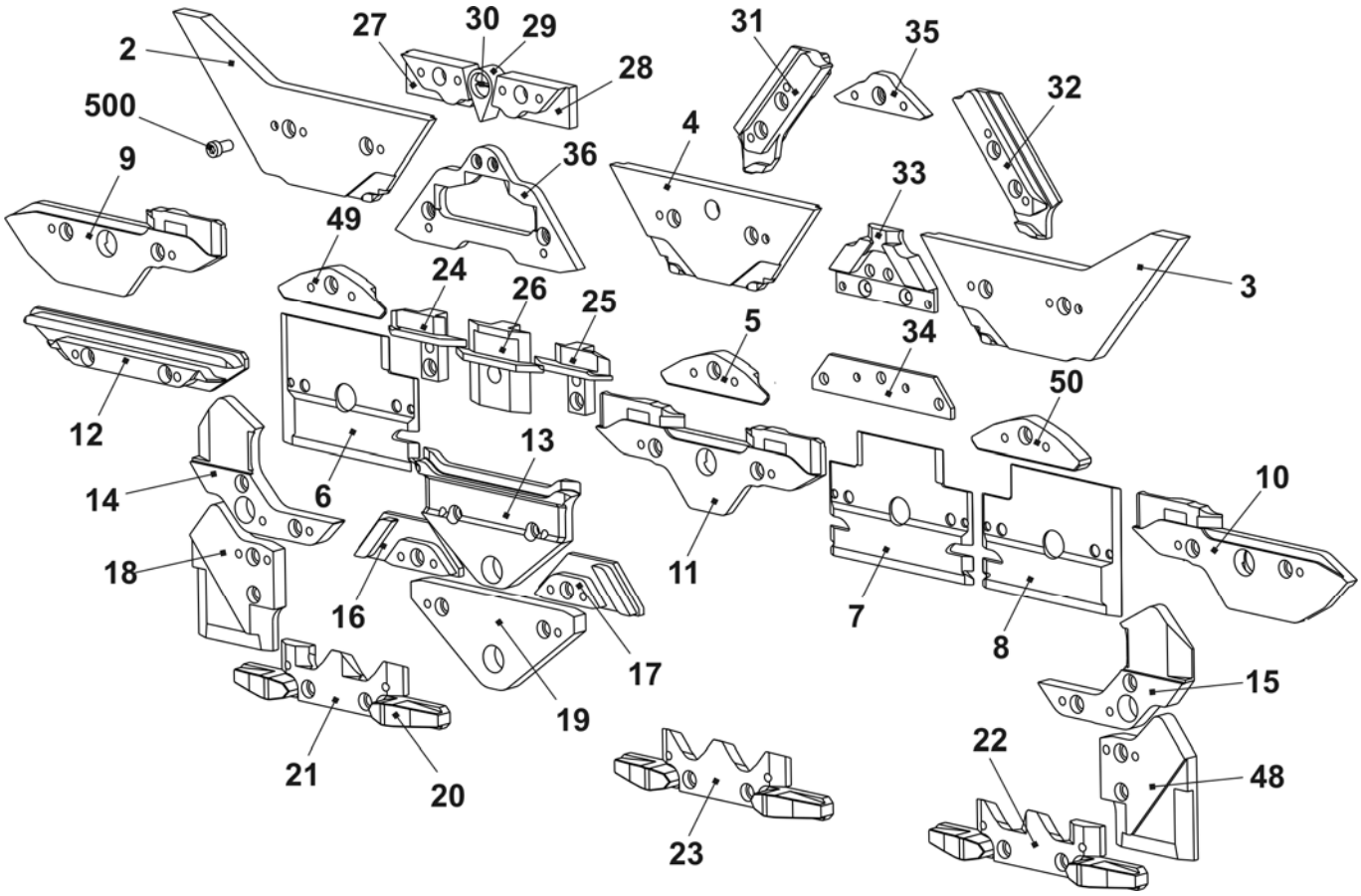

Cam box E10

Pos	Designation		ID	Pos	Designation	ID
Σ	**Cam box set co. E10**		**244 382**	42	Switching piece	240 281
1	Cam plate		241 760	58	Shoulder screw	239 626
37	Stitch forming cam on the right co. E5-10		211 163	505	Shim 0.03x12x75	022 828
38	Stitch forming cam on the left co. E5-10		211 164	506	Shim 0.05x12x75	022 829
39	Rod guide element on the left		211 165	507	Shim 0.1x12x75	022 830
40	Rod guide element in the middle		211 166	508	Shim 0.2x12x75	022 831
41	Rod guide element on the right		211 168	509	Countersunk screw M3x4	023 142
	402	Spring rod	209 791			
	541	Disc 4.3x7x0.5	022 153			
	542	Circlip 3.2	021 019			
	543	Compression spring	023 344			

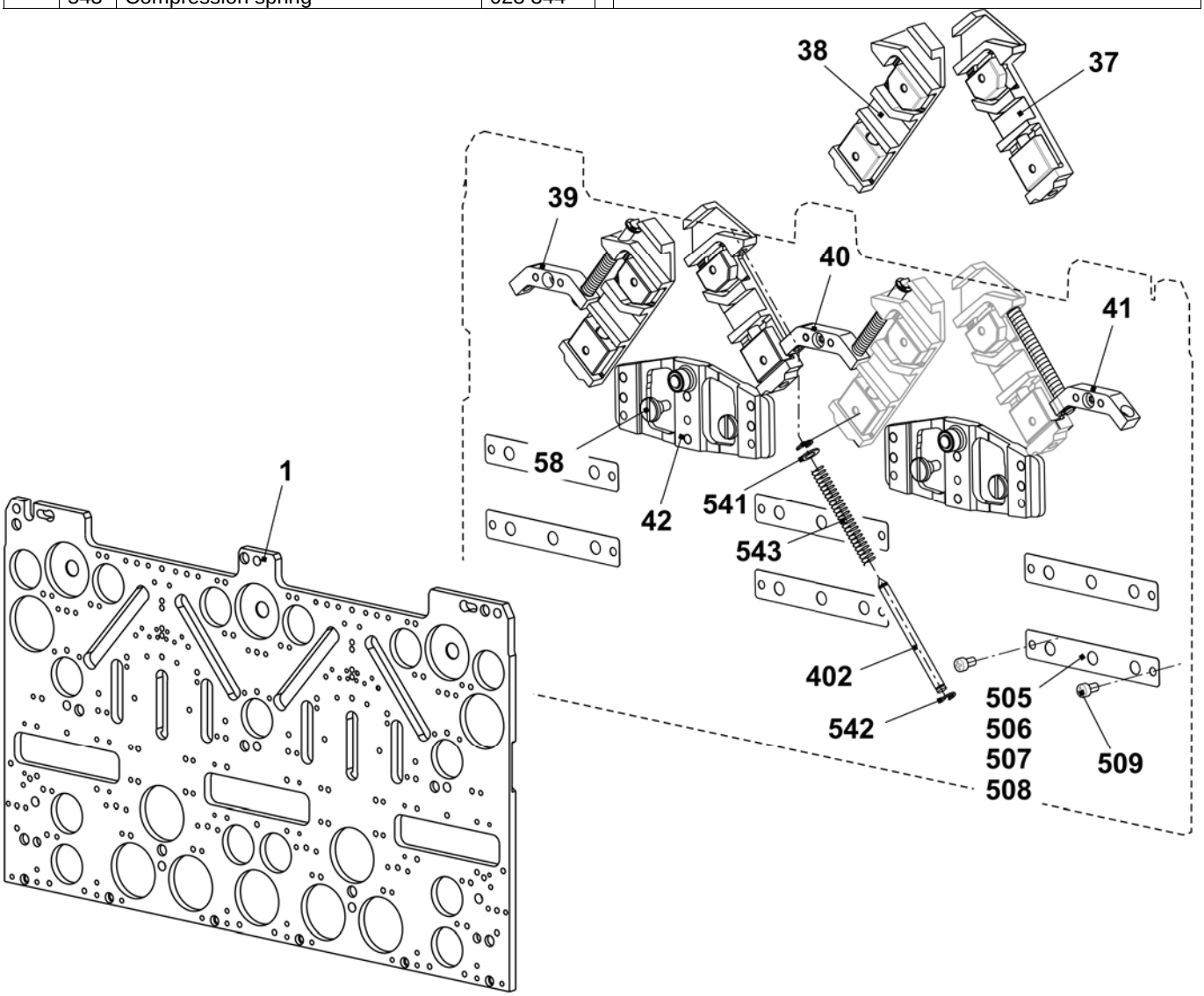

Cams E10

Pos	Designation	ID	Pos	Designation	ID
2	Entry cam on the left	243 595	23	Selector cam	212 946
3	Entry cam on the right	243 597	24	Pressure part take-over on the left	239 848
4	Entry cam in the middle	243 596	25	Pressure part take-over on the right	239 849
5	Entry cam at the bottom - 1.5 E10 - E14	216 328	26	Tuck pressure part	239 621
6	Plate on the left	230 988	27	Limit cam E10	210 611
7	Plate in the middle	231 035	29	Pointer E10 – E14	210 349
8	Plate on the right	231 036	30	Screw	210 335
9	Cam on the left	231 039	31	Stitch cam on the left E10-E14 + E7.2	236 318
10	Cam on the right	231 041	32	Stitch cam on the right E10-E14 + E7.2 (at the front)	236 319
11	Cam in the middle	231 040	33	Tuck limit cam E10 + E7.2	236 345
12	Cam	227 923	34	Raising cam plate E4-12	204 372
13	Cam	210 254	35	Receiving cam E10 - E12	210 595
14	Cam on the left E5-14	212 265	36	Raising cam without split E10 – E12 + E7.2	237 993
15	Cam on the right E5-14	212 266			
16	Cam on the left	236 192		Raising cam with split E10 – E12 + E7.2 Accessory	213 300
17	Cam on the right	236 193			
18	Cam on the left E5-14	212 274	48	Cam on the right E5-14	212 275
19	Cam	210 252	49	Entry cam on the left -1.5 E10 - E14	216 329
20	Offering cam	210 185	50	Entry cam on the right -1.5 E10 - E14	216 330
21	Selector cam on the left	212 944	500	Cap screw M4x8	020 091
22	Selector cam on the right	212 947	60	Stitch cam at the rear on the right E10 - E12	236 320

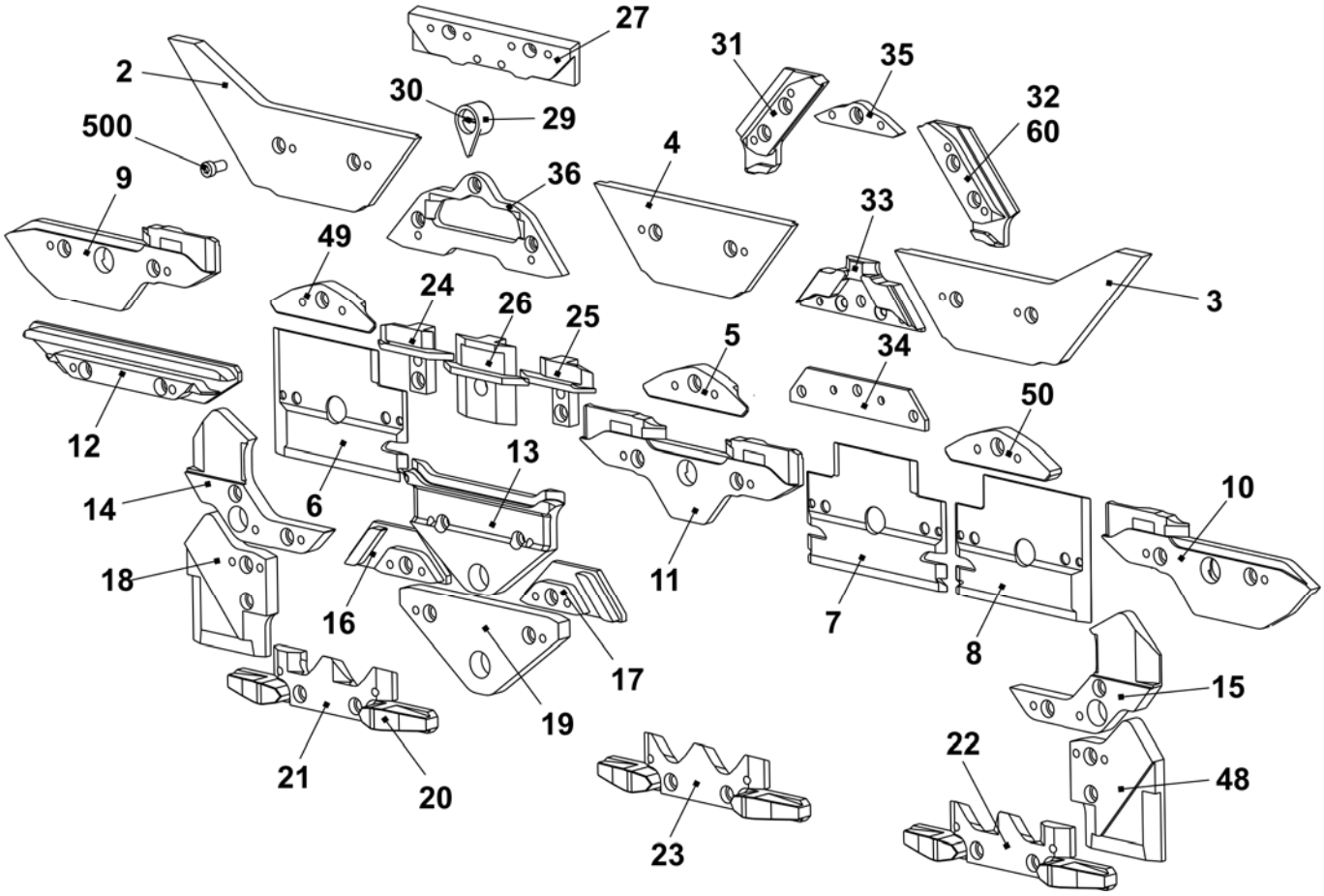

Cams for narrow coupling E10 + E12 + E14 + E16 + E18 + E10m.12 + E6.2(12m.10) +E6.2mg + E7.2mg + E8.2mg

Pos	*Designation*	*ID*		*Pos*	*Designation*	*ID*
2	Entry cam on the right	243 858		3	Entry cam on the left	243 857
14	Cam on the right E5-14	216 168		15	Cam on the left E5-14	216 167
18	Cam on the right	216 166		48	Cam on the left	216 165

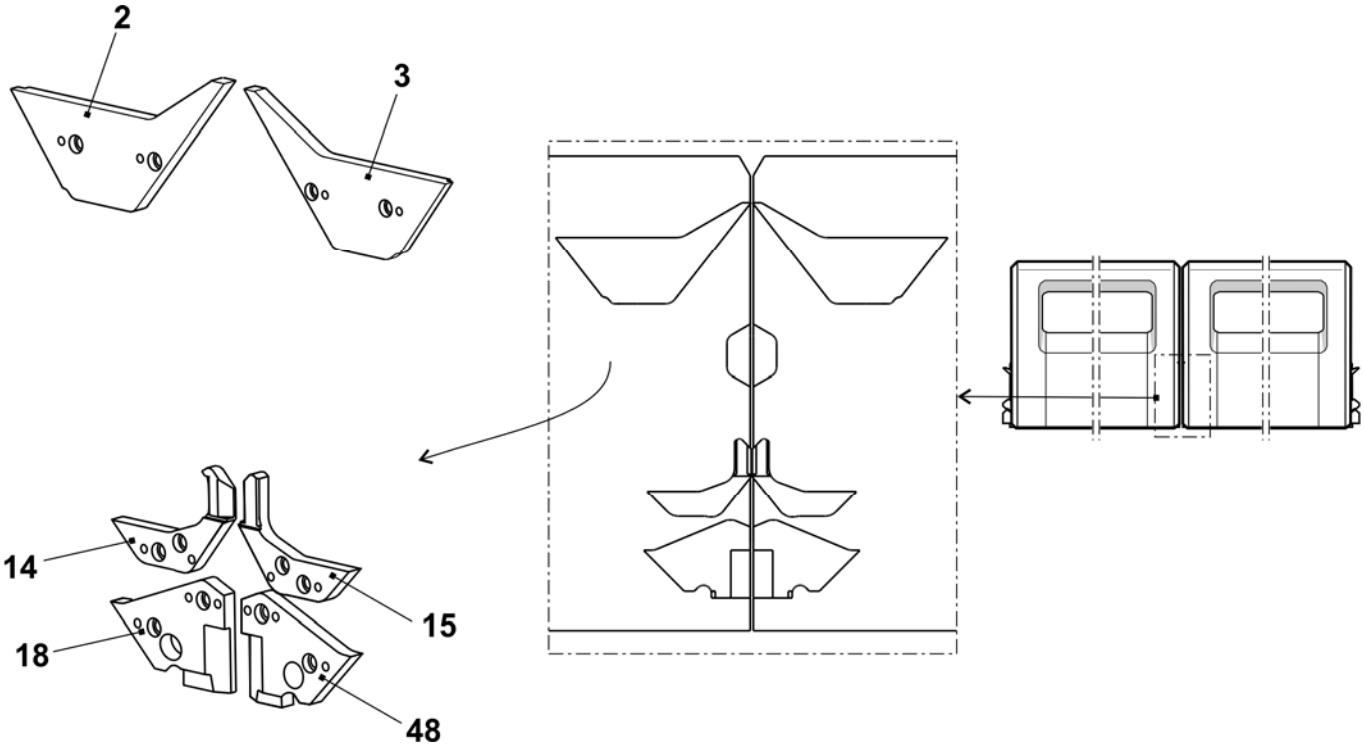

Cam box E12

Pos	Designation		ID	Pos	Designation	ID
Σ	**Cam box set co. E12**		**243 917**	42	Switching piece	240 281
1	Cam plate		241 760	58	Shoulder screw	239 626
37	Stitch forming cam on the right co. E12 – E14		214 088	505	Shim 0.03x12x75	022 828
38	Stitch forming cam on the left co. E12 – E14		214 089	506	Shim 0.05x12x75	022 829
39	Rod guide element on the left		211 165	507	Shim 0.1x12x75	022 830
40	Rod guide element in the middle		211 166	508	Shim 0.2x12x75	022 831
41	Rod guide element on the right		211 168	509	Countersunk screw M3x4	023 142
	402	Spring rod	209 791			
	541	Disc 4.3x7x0.5	022 153			
	542	Circlip 3.2	021 019			
	543	Compression spring	023 344			

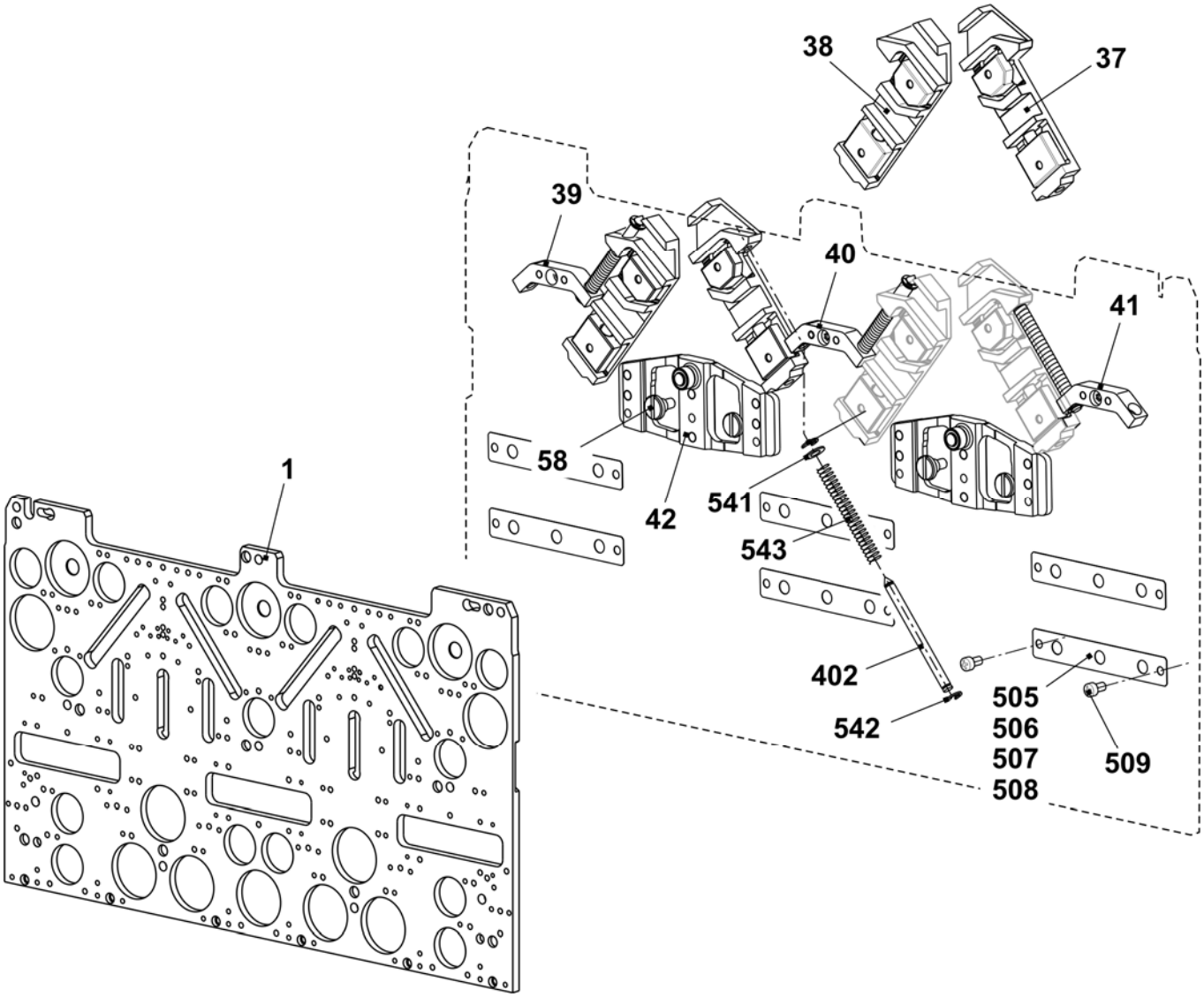

Cams E12

Pos	Designation	ID	Pos	Designation	ID
2	Entry cam on the left	243 595	23	Selector cam	212 946
3	Entry cam on the right	243 597	24	Pressure part take-over on the left	239 848
4	Entry cam in the middle	243 596	25	Pressure part take-over on the right	239 849
5	Entry cam at the bottom - 1.5 E10 - E14	216 328	26	Tuck pressure part	239 621
6	Plate on the left	230 988	27	Limit cam E12 – E14	210 612
7	Plate in the middle	231 035	29	Pointer E10 – E14	210 349
8	Plate on the right	231 036	30	Screw	210 335
9	Cam on the left	231 039	31	Stitch cam on the left E10-E14 + E7.2	236 318
10	Cam on the right	231 041	32	Stitch cam on the right E10-E14 + E7.2	236 319
11	Cam in the middle	231 040	33	Tuck limit cam E12	236 403
12	Cam	227 923	34	Raising cam plate E4-12	204 372
13	Cam	210 254	35	Receiving cam E10 - E12	210 595
14	Cam on the left E5-14	212 265	36	Raising cam without split E10 – E12 + E7.2	237 993
15	Cam on the right E5-14	212 266			
16	Cam on the left	236 192		Raising cam with split E10 – E12 Accessory	213 300
17	Cam on the right	236 193			
18	Cam on the left E5-14	212 274	48	Cam on the right E5-14	212 275
19	Cam	210 252	49	Entry cam on the left -1.5 E10 - E14	216 329
20	Offering cam	210 185	50	Entry cam on the right -1.5 E10 - E14	216 330
21	Selector cam on the left	212 944	500	Cap screw M4x8	020 091
22	Selector cam on the right	212 947	60	Stitch cam at the rear on the right E10 - E12	236 320

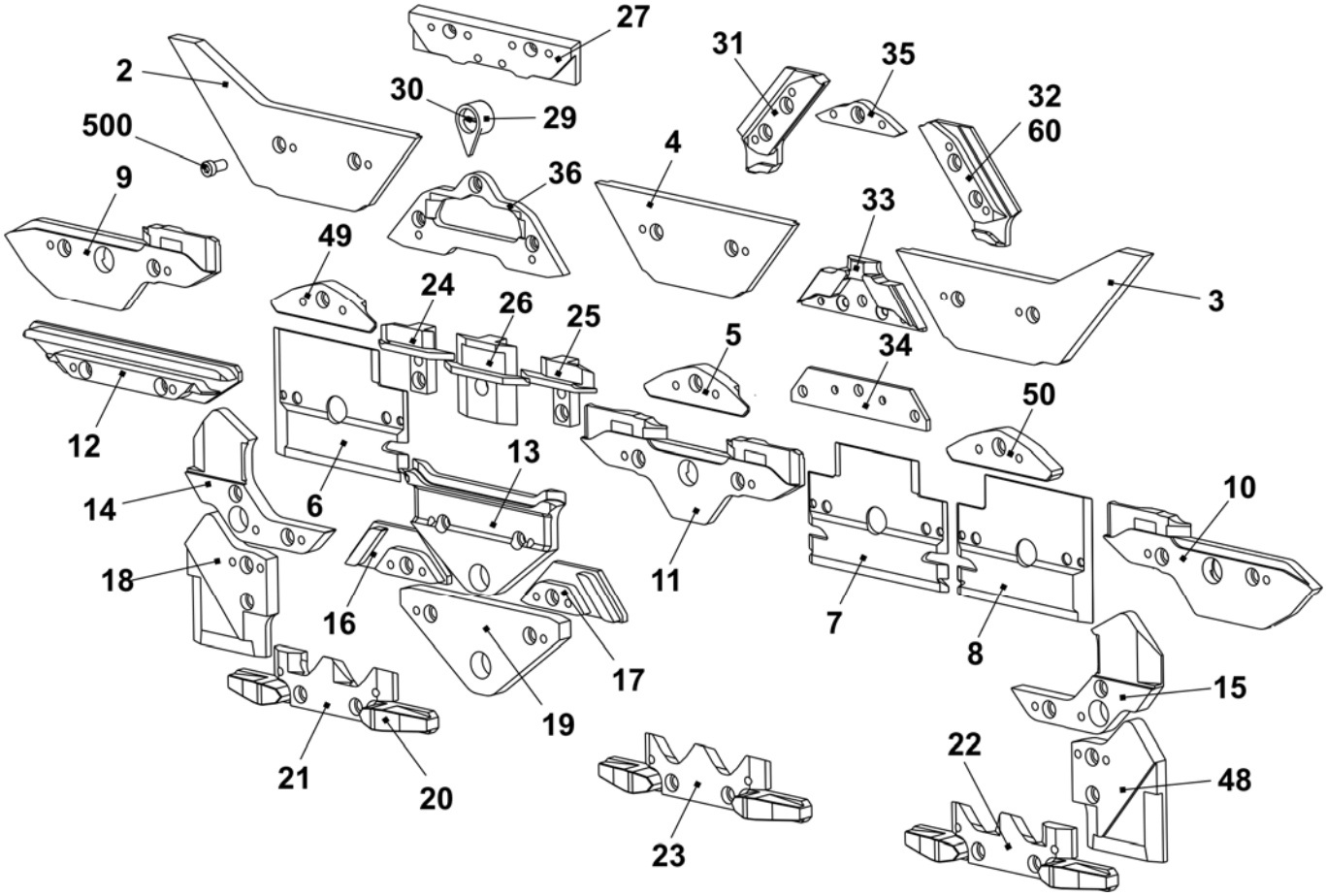

Cam box E14

Pos	Designation		ID	Pos	Designation	ID
Σ	**Cam box co. E14**		**244 384**	42	Switching piece	240 281
1	Cam plate		241 760	58	Shoulder screw	239 626
37	Stitch forming cam on the right co. E12 – E14		214 088	505	Shim 0.03x12x75	022 828
38	Stitch forming cam on the left co. E12 – E14		214 089	506	Shim 0.05x12x75	022 829
39	Rod guide element on the left		211 165	507	Shim 0.1x12x75	022 830
40	Rod guide element in the middle		211 166	508	Shim 0.2x12x75	022 831
41	Rod guide element on the right		211 168	509	Countersunk screw M3x4	023 142
	402	Spring rod	209 791			
	541	Disc 4.3x7x0.5	022 153			
	542	Circlip 3.2	021 019			
	543	Compression spring	023 344			

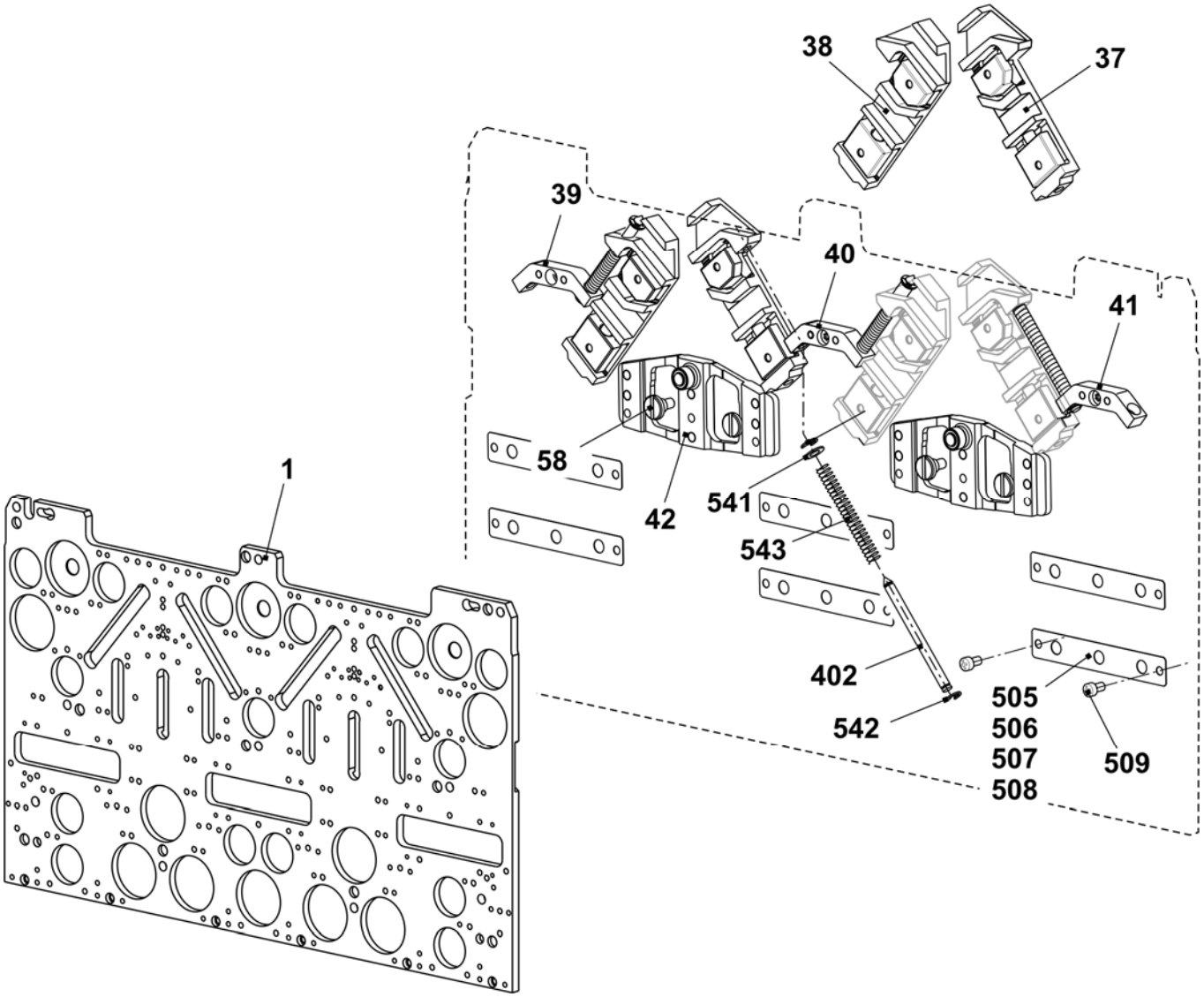

Cams E14

Pos	Designation	ID	Pos	Designation	ID
2	Entry cam on the left	243 595	23	Selector cam	212 946
3	Entry cam on the right	243 597	24	Pressure part take-over on the left	239 848
4	Entry cam in the middle	243 596	25	Pressure part take-over on the right	239 849
5	Entry cam at the bottom - 1.5 E10 - E14	216 328	26	Tuck pressure part	239 621
6	Plate on the left	230 988	27	Limit cam E12 – E14	210 612
7	Plate in the middle	231 035	29	Pointer E10 – E14	210 349
8	Plate on the right	231 036	30	Screw	210 335
9	Cam on the left	231 039	31	Stitch cam on the left E10-E14 + E7.2	236 318
10	Cam on the right	231 041	32	Stitch cam on the right E10-E14 + E7.2	236 319
11	Cam in the middle	231 040	33	Tuck limit cam E14	236 428
12	Cam	227 923	34	Raising cam plate E4-12	204 372
13	Cam	210 254	35	Receiving cam E14	236 944
14	Cam on the left E5-14	212 265	36	Raising cam without split E14	236 767
15	Cam on the right E5-14	212 266			
16	Cam on the left	236 192		Raising cam with split E14 Accessory	214 212
17	Cam on the right	236 193			
18	Cam on the left E5-14	212 274	48	Cam on the right E5-14	212 275
19	Cam	210 252	49	Entry cam on the left -1.5 E10 - E14	216 329
20	Offering cam	210 185	50	Entry cam on the right -1.5 E10 - E14	216 330
21	Selector cam on the left	212 944	500	Cap screw M4x8	020 091
22	Selector cam on the right	212 947			

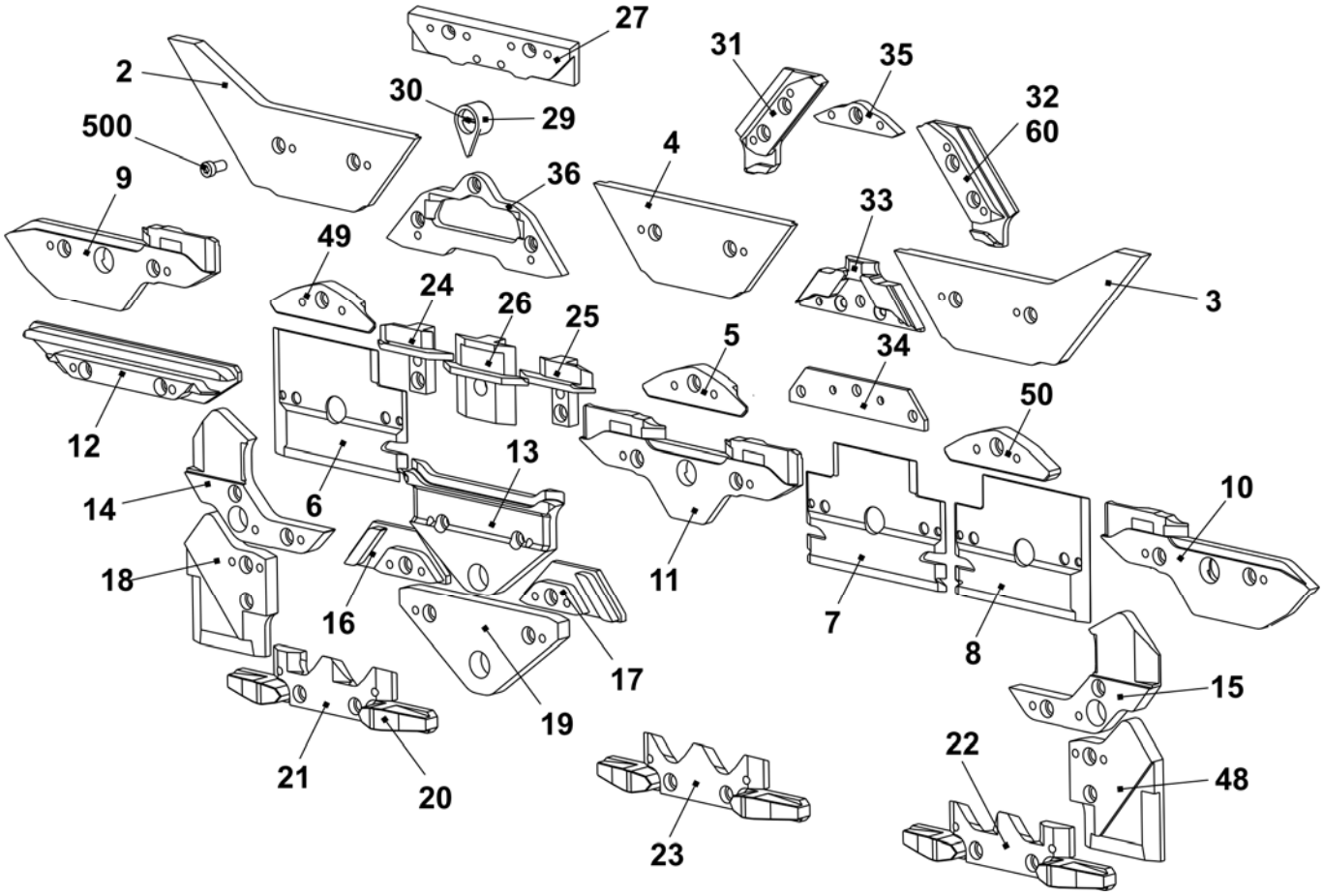

Cam box E16 + E18

Pos	Designation		ID	Pos	Designation	ID
Σ	**Cam box set co. E16 - E20**		**242 243**	42	Switching piece	240 281
1	Cam plate		241 760	58	Shoulder screw	239 626
37	Stitch forming cam on the right co. E16 - E20		221 123	505	Shim 0.03x12x75	022 828
38	Stitch forming cam on the left co. E16 - E20		221 124	506	Shim 0.05x12x75	022 829
39	Rod guide element on the left		211 165	507	Shim 0.1x12x75	022 830
40	Rod guide element in the middle		211 166	508	Shim 0.2x12x75	022 831
41	Rod guide element on the right		211 168	509	Countersunk screw M3x4	023 142
	402	Spring rod	209 791			
	541	Disc 4.3x7x0.5	022 153			
	542	Circlip 3.2	021 019			
	543	Compression spring	023 344			

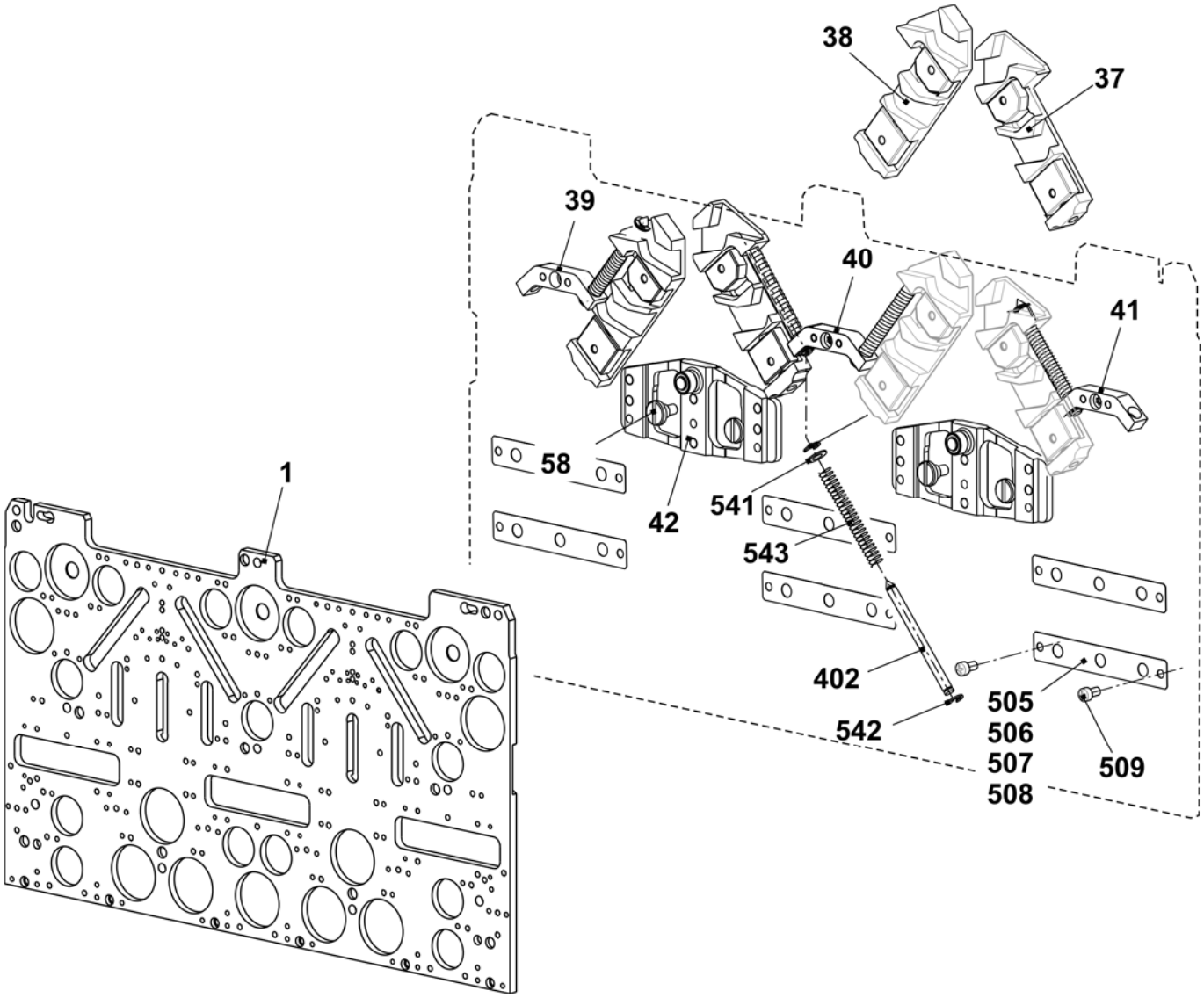

Cams E16 + E18

Pos	Designation	ID	Pos	Designation	ID
2	Entry cam on the left	243 595	23	Selector cam	253 630
3	Entry cam on the right	243 597	24	Pressure part take-over on the left	239 848
4	Entry cam in the middle	243 596	25	Pressure part take-over on the right	239 849
5	Entry cam at the bottom E16 - E20	220 842	26	Tuck pressure part	239 621
6	Plate on the left	230 988	27	Limit cam E16 - E20	220 865
7	Plate in the middle	231 035	29	Pointer E16 - E20	224 382
8	Plate on the right	231 036	30	Screw	210 335
9	Cam on the left	231 039	31	Stitch cam on the left E16 - E20	220 870
10	Cam on the right	231 041	32	Stitch cam on the right E16 - E20	220 871
11	Cam in the middle	231 040	33	Tuck limit cam E16 - E18	239 936
12	Cam	227 923	34	Raising cam plate E4-12	204 372
13	Cam	210 254	35	Receiving cam E16 - E20	220 863
14	Cam on the left E5-14	212 265	36	Raising cam without split E16 - E18 + E9.2	239 457
15	Cam on the right E5-14	212 266			
16	Cam on the left	236 192		Raising cam with split E16 - E18 + E9.2 (Accessories)	239 742
17	Cam on the right	236 193			
18	Cam on the left E5-14	212 274	48	Cam on the right E5-14	212 275
19	Cam	210 252	49	Entry cam on the left E16 - E20	220 841
20	Offering cam	210 185	50	Entry cam on the right E16 - E20	220 843
21	Selector cam on the left	253 629	500	Cap screw M4x8	020 091
22	Selector cam on the right	253 631			

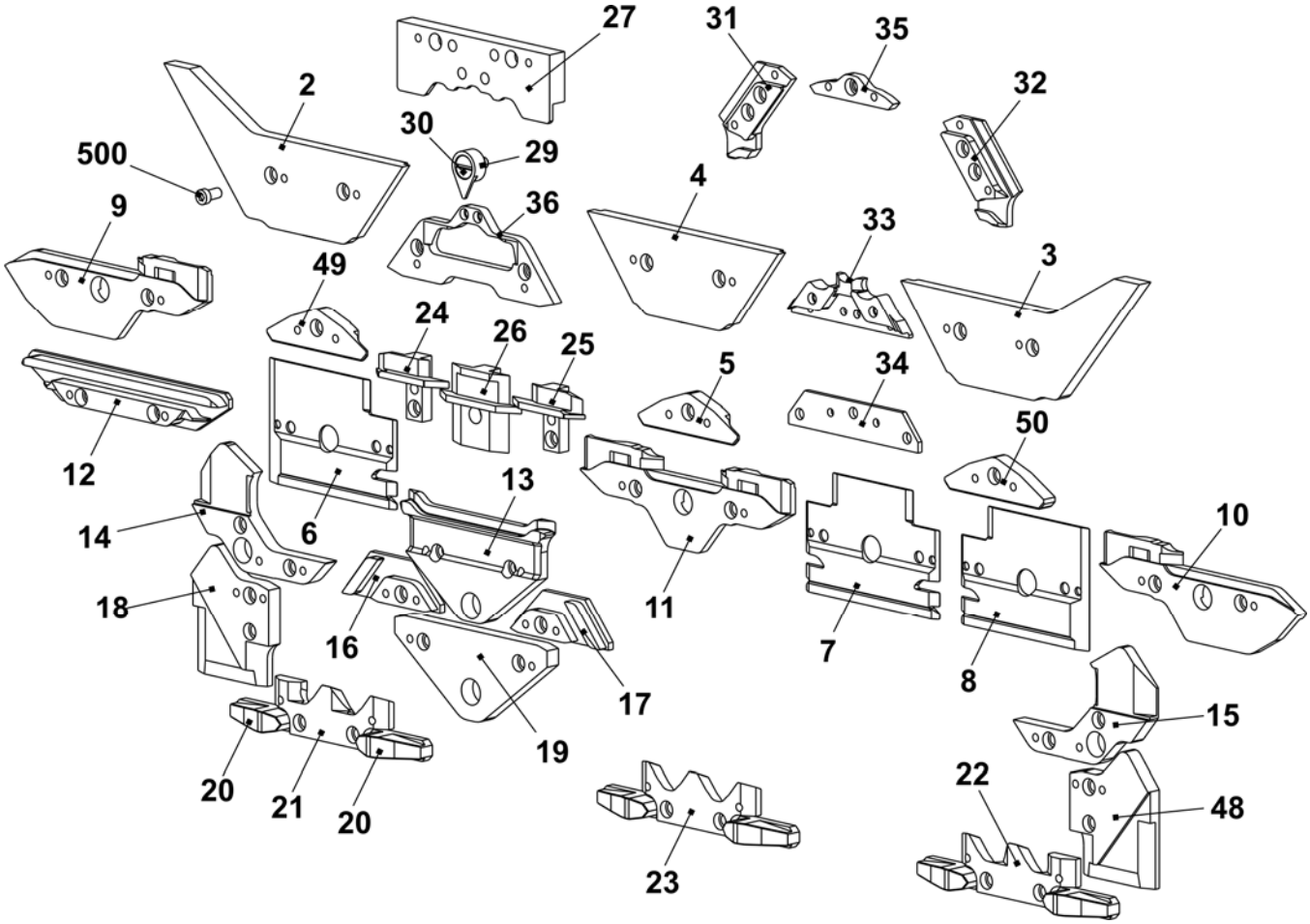

Cam box E10m.12

Pos	Designation		ID	Pos	Designation	ID
Σ	**Cam box set co. E10m.12**		**244 392**	42	Switching piece	240 281
1	Cam plate		241 760	58	Shoulder screw	239 626
37	Stitch forming cam on the right co. E5-10		211 163	505	Shim 0.03x12x75	022 828
38	Stitch forming cam on the left co. E5-10		211 164	506	Shim 0.05x12x75	022 829
39	Rod guide element on the left		211 165	507	Shim 0.1x12x75	022 830
40	Rod guide element in the middle		211 166	508	Shim 0.2x12x75	022 831
41	Rod guide element on the right		211 168	509	Countersunk screw M3x4	023 142
	402	Spring rod	209 791			
	541	Disc 4.3x7x0.5	022 153			
	542	Circlip 3.2	021 019			
	543	Compression spring	023 344			

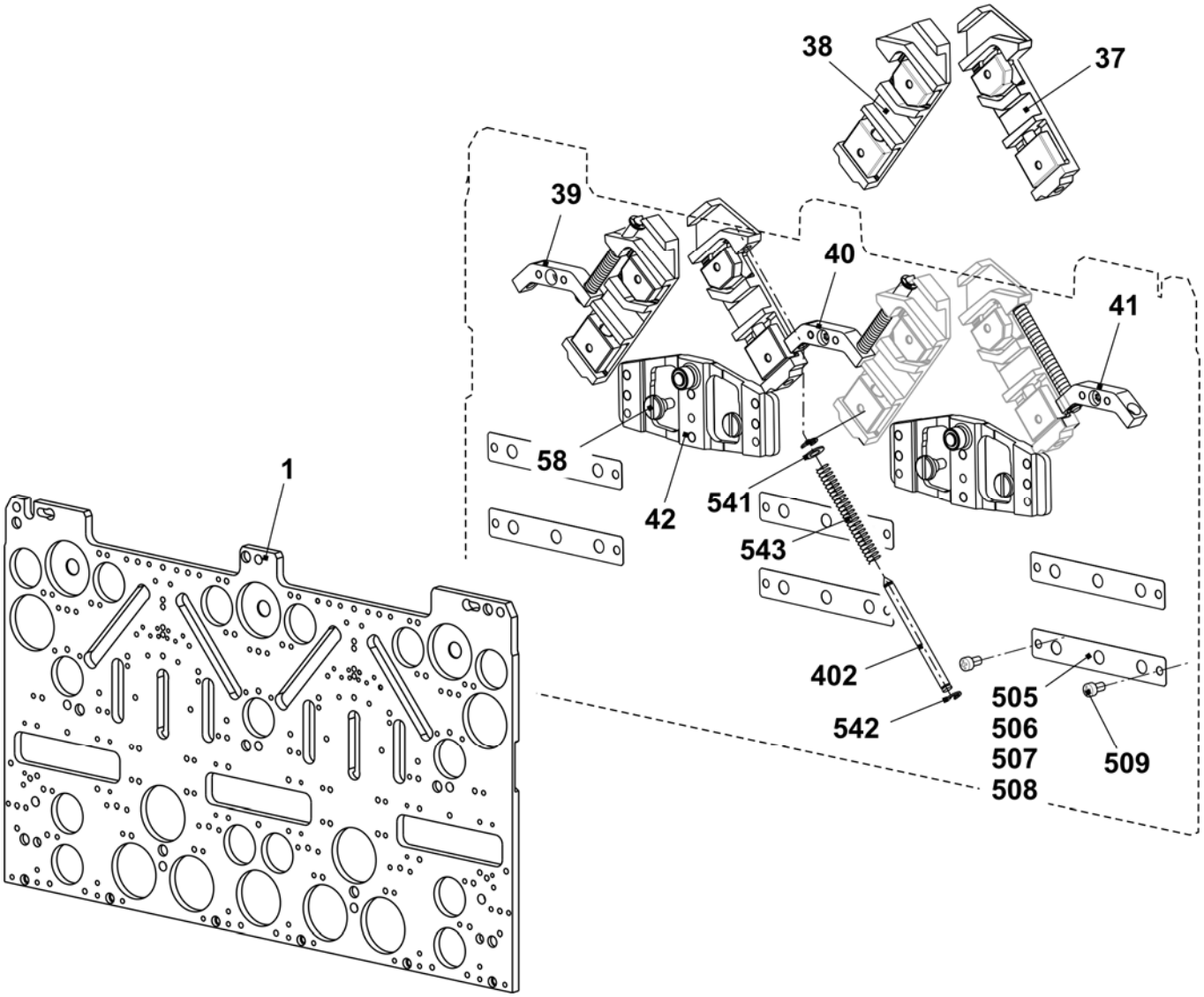

Cams E10m.12

Pos	Designation	ID	Pos	Designation	ID
2	Entry cam on the left	243 595	23	Selector cam	212 946
3	Entry cam on the right	243 597	24	Pressure part take-over on the left	239 848
4	Entry cam in the middle	243 596	25	Pressure part take-over on the right	239 849
5	Entry cam at the bottom - 1.5 E10 - E14	216 328	26	Tuck pressure part	239 621
6	Plate on the left	230 988	27	Limit cam E12 – E14	210 612
7	Plate in the middle	231 035	29	Pointer E10 – E14	210 349
8	Plate on the right	231 036	30	Screw	210 335
9	Cam on the left	231 039	31	Stitch cam on the left E10-E14 + E7.2	236 318
10	Cam on the right	231 041	32	Stitch cam on the right E10-E14 + E7.2	236 319
11	Cam in the middle	231 040	33	Tuck limit cam E12	236 403
12	Cam	227 923	34	Raising cam plate E4-12	204 372
13	Cam	210 254	35	Receiving cam E10 - E12	210 595
14	Cam on the left E5-14	212 265	36	Raising cam without split E10 – E12 + E7.2	237 993
15	Cam on the right E5-14	212 266			
16	Cam on the left	236 192		Raising cam with split E10 – E12 + E7.2 Accessory	213 300
17	Cam on the right	236 193			
18	Cam on the left E5-14	212 274	48	Cam on the right E5-14	212 275
19	Cam	210 252	49	Entry cam on the left -1.5 E10 - E14	216 329
20	Offering cam	210 185	50	Entry cam on the right -1.5 E10 - E14	216 330
21	Selector cam on the left	212 944	500	Cap screw M4x8	020 091
22	Selector cam on the right	212 947	60	Stitch cam at the rear on the right E10 - E12	236 320

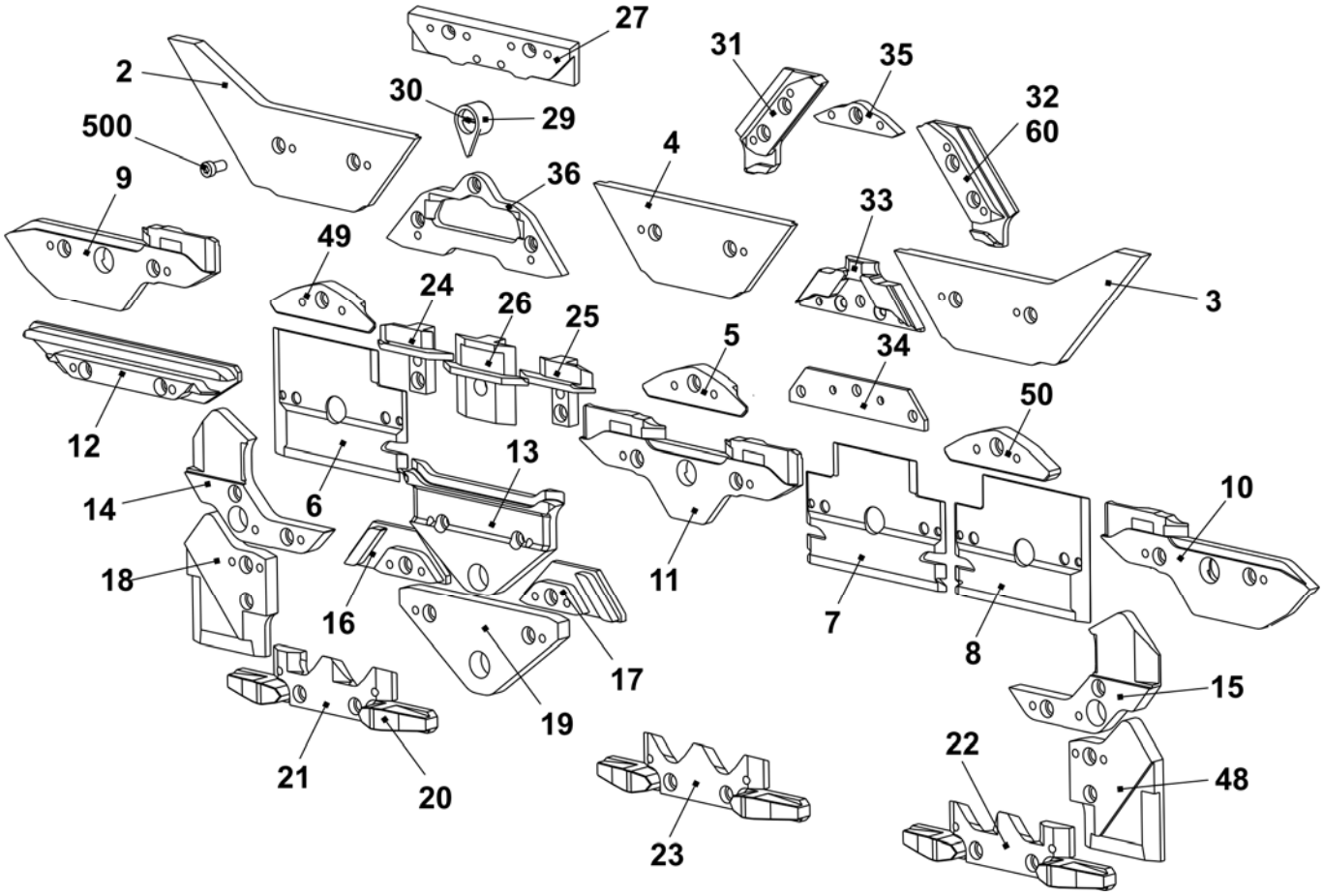

Cam box E6.2kw

Pos	Designation		ID	Pos	Designation	ID
Σ	**Cam box set co. E6.2 k&w**		**243 403**	42	Switching piece	240 281
1	Cam plate		241 760	58	Shoulder screw	239 626
37	Stitch forming cam on the right co. E12 – E14		214 088	505	Shim 0.03x12x75	022 828
38	Stitch forming cam on the left co. E12 – E14		214 089	506	Shim 0.05x12x75	022 829
39	Rod guide element on the left		211 165	507	Shim 0.1x12x75	022 830
40	Rod guide element in the middle		211 166	508	Shim 0.2x12x75	022 831
41	Rod guide element on the right		211 168	509	Countersunk screw M3x4	023 142
	402	Spring rod	209 791			
	541	Disc 4.3x7x0.5	022 153			
	542	Circlip 3.2	021 019			
	543	Spring	023 344			

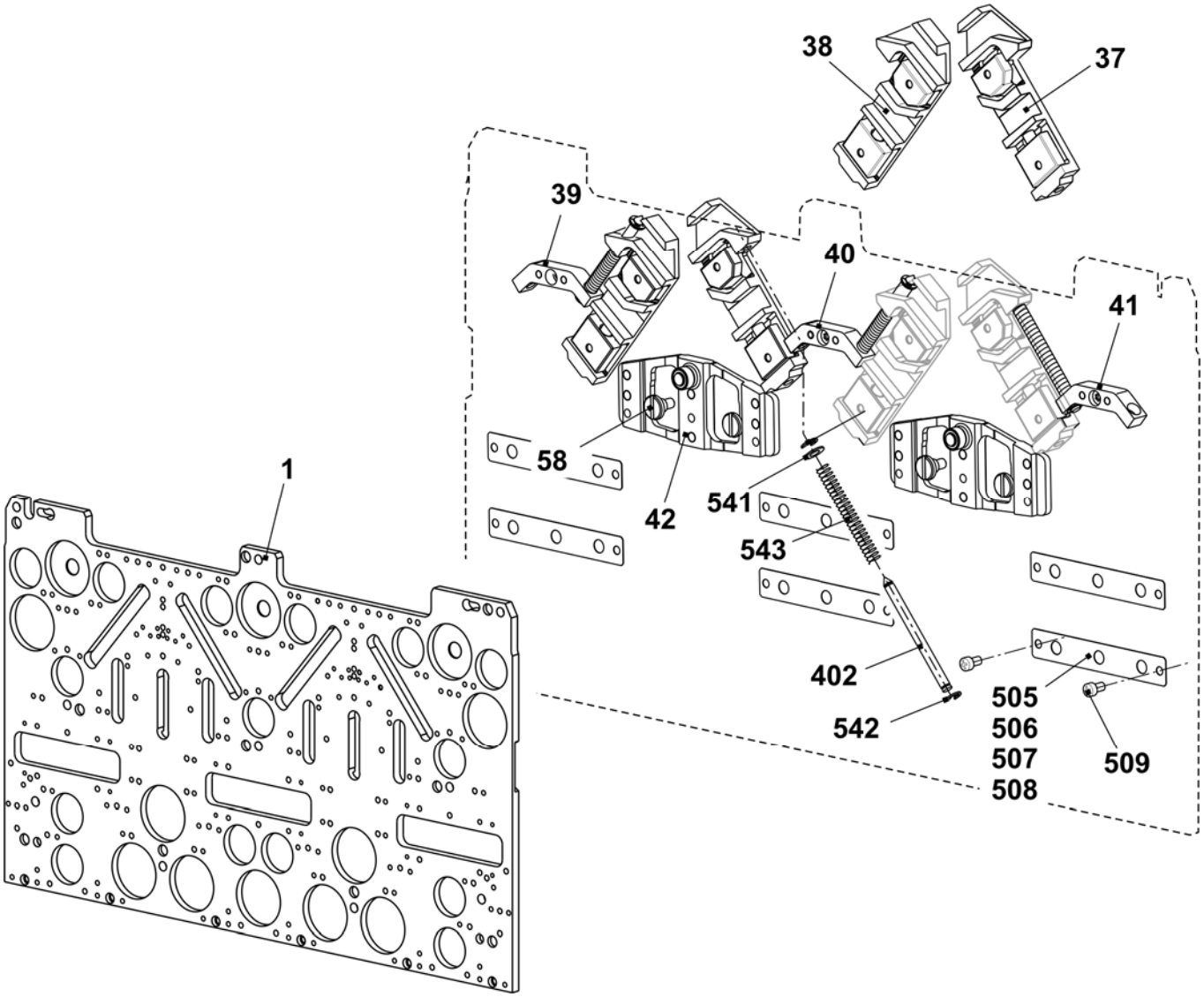

Cams E6.2kw + E7.2kw

Pos	Designation	ID	Pos	Designation	ID
2	Entry cam on the left E6.2 + E7.2 + E9.2	243 870	23	Selector cam	|212 946
3	Entry cam on the right E6.2 + E7.2 + E9.2	243 872	24	Pressure part take-over on the left	239 848
4	Entry cam in the middle E6.2 + E7.2 + E9.2	243 871	25	Pressure part take-over on the right	239 849
5	Entry cam at the bottom E5 - E8	212 395	26	Tuck pressure part	239 621
6	Plate on the left	230 988	27	Limit cam E6.2	218 306
7	Plate in the middle	231 035	29	Pointer E10 – E14	210 349
8	Plate on the right	231 036	30	Screw	210 335
9	Cam on the left	231 039	31	Stitch cam on the left E6.2	236 392
10	Cam on the right	231 041	32	Stitch cam on the right E6.2	236 393
11	Cam in the middle	231 040	33	Tuck limit cam E6.2	236 429
12	Cam	227 923	34	Raising cam plate E4-12	204 372
13	Cam	210 254	35	Receiving cam E6.2	236 943
14	Cam on the left E5 - E14	212 265	36	Raising cam part without split E6.2	236 766
15	Cam on the right E5 - E14	212 266		Raising cam part with split E6.2 Accessory	237 948
16	Cam on the left	236 192			
17	Cam on the right	236 193	48	Cam on the right E5-14	212 275
18	Cam on the left E5 - E14	212 274	49	Entry cam on the left E5-8	213 161
19	Cam	210 252	50	Entry cam on the right E5-8	213 162
20	Offering cam	210 185	500	Cap screw M4x8	020 091
21	Selector cam on the left	212 944			
22	Selector cam on the right	212 947			

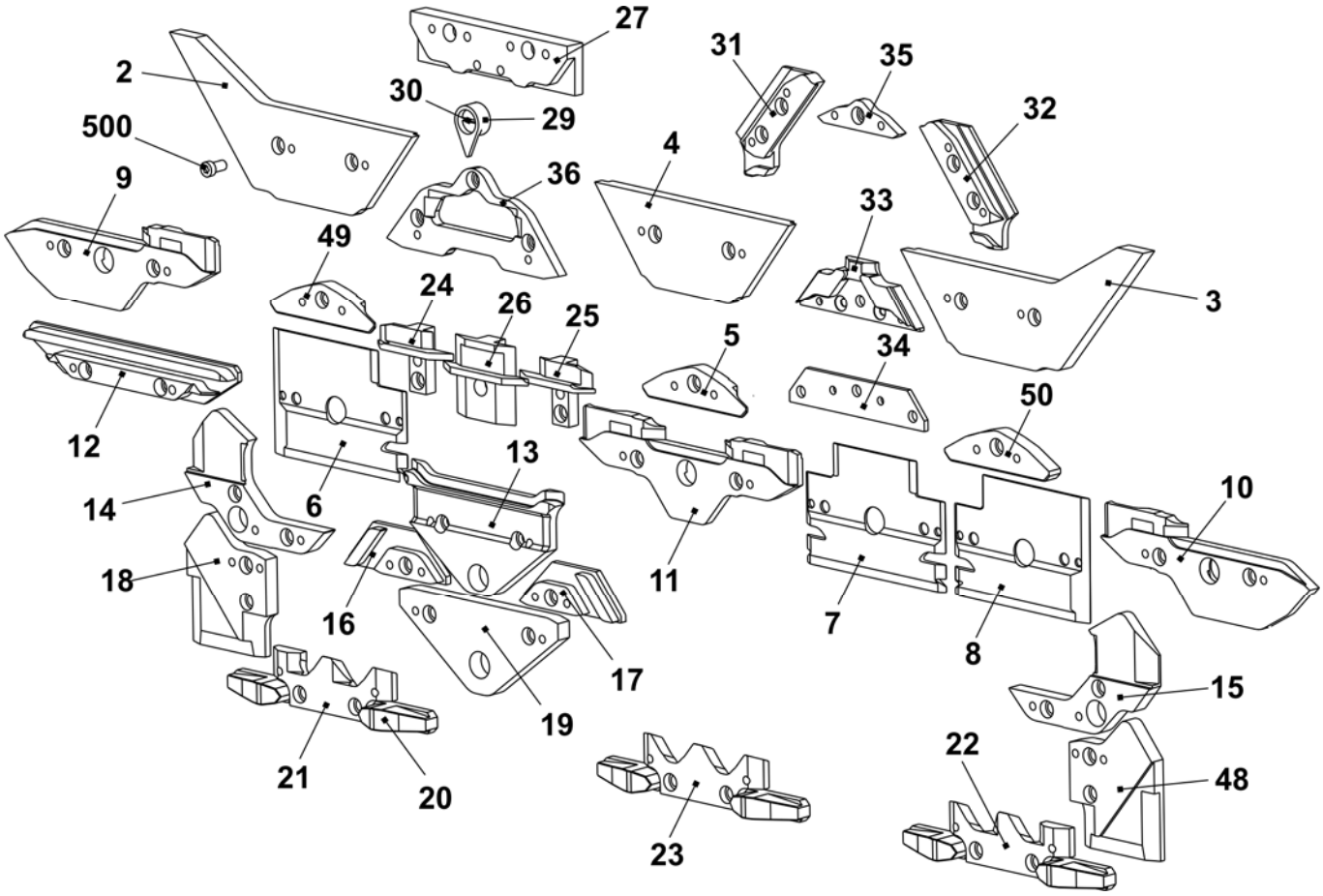

Cams for narrow coupling E6.2kw + E7.2kw

Pos	Designation	ID		Pos	Designation	ID
2	Entry cam on the right E6.2+7.2+9.2	243 878		3	Entry cam on the left E6.2+7.2+9.2	243 877
14	Cam on the right E5-14	216 168		15	Cam on the left E5-14	216 167
18	Cam on the right	216 166		48	Cam on the left	216 165

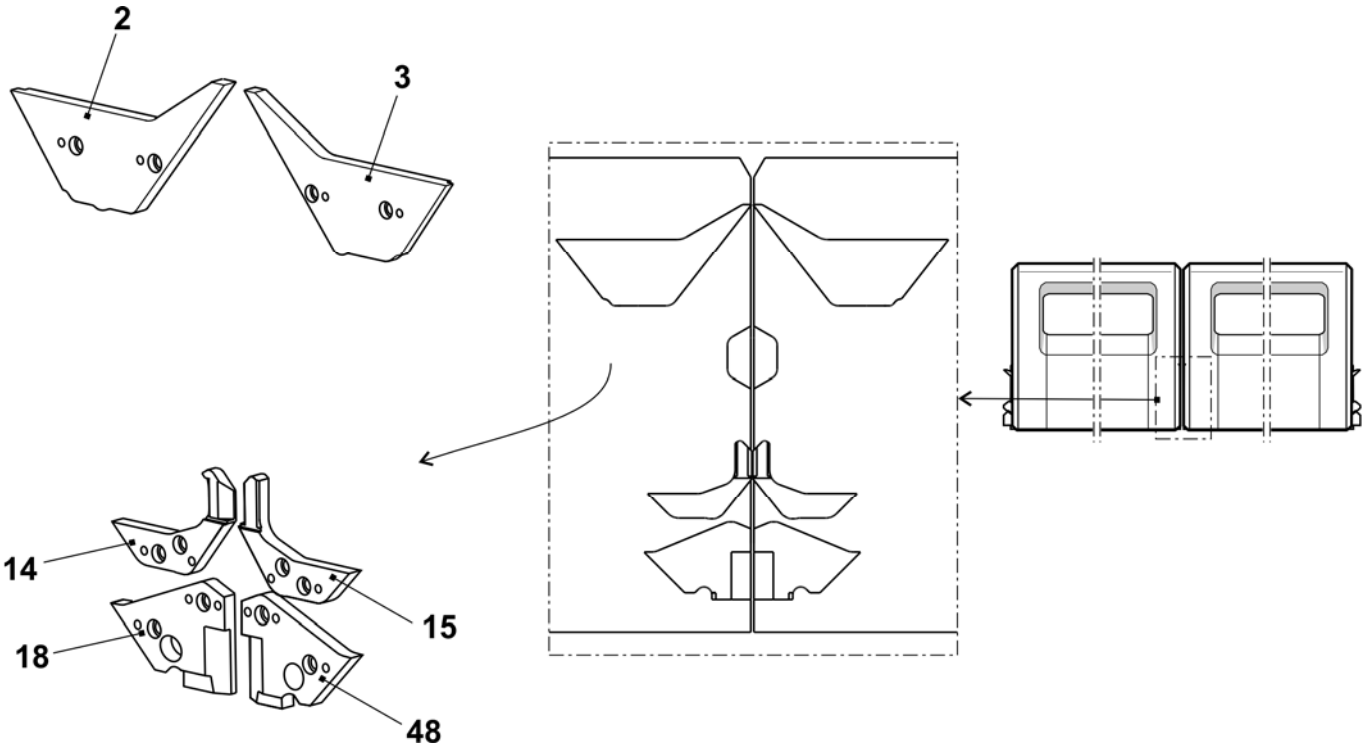

Cam box E6.2mg

Pos	Designation		ID	Pos	Designation	ID
Σ	**Cam box set co. E6.2 mg**		**242 275**	42	Switching piece	240 281
1	Cam plate		241 760	58	Shoulder screw	239 626
37	Loop forming cam on the right co. E12 – E14		214 088	505	Shim 0.03x12x75	022 828
38	Loop forming cam on the left co. E12 – E14		214 089	506	Shim 0.05x12x75	022 829
39	Rod guide element on the left		211 165	507	Shim 0.1x12x75	022 830
40	Rod guide element in the middle		211 166	508	Shim 0.2x12x75	022 831
41	Rod guide element on the right		211 168	509	Countersunk screw M3x4	023 142
	402	Spring rod	209 791			
	541	Disc 4.3x7x0.5	022 153			
	542	Circlip 3.2	021 019			
	543	Compression spring	023 344			

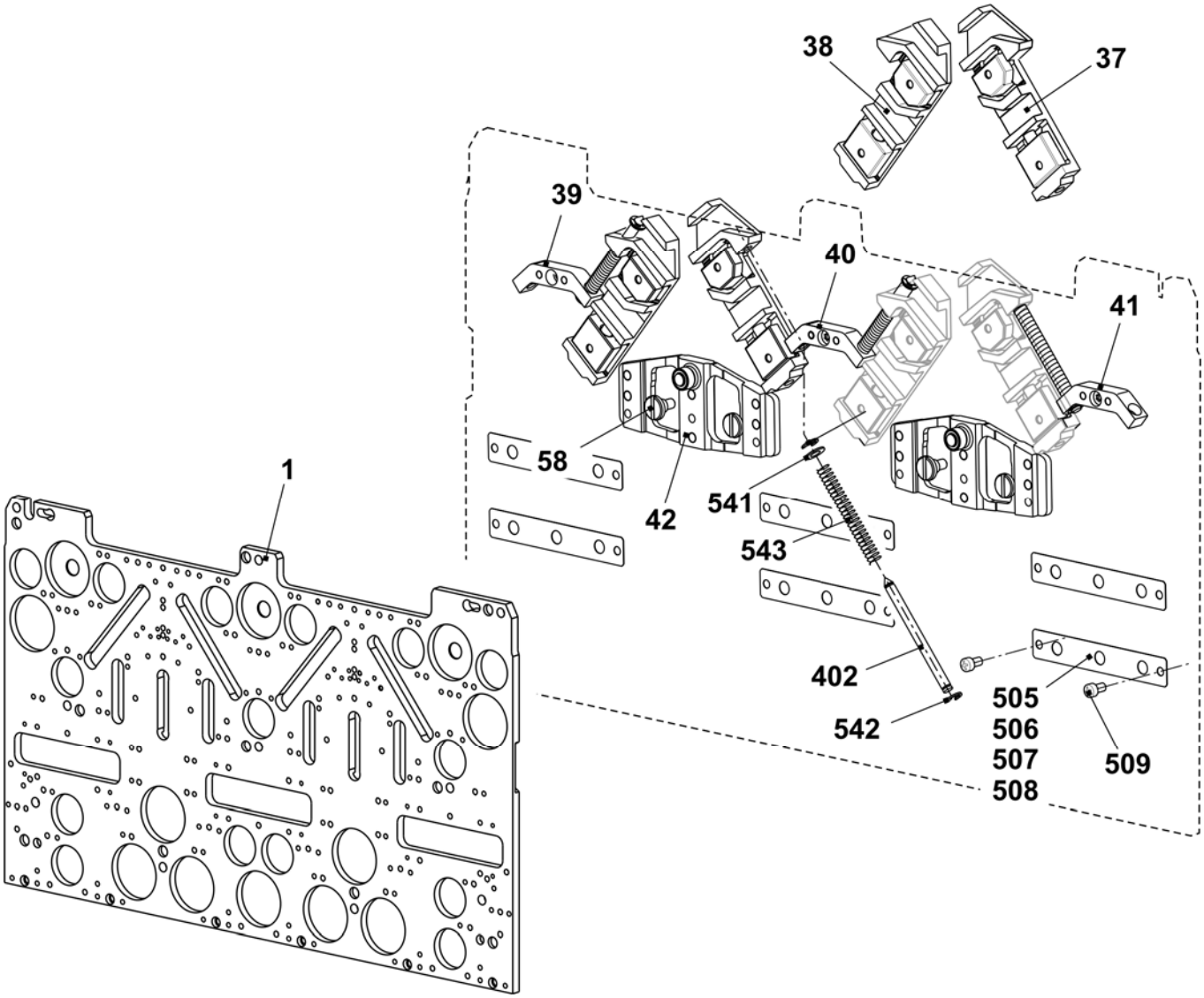

Cams E6.2mg

Pos	Designation	ID	Pos	Designation	ID
2	Entry cam on the left	243 595	23	Selector cam	212 946
3	Entry cam on the right	243 597	24	Pressure part take-over on the left	239 848
4	Entry cam in the middle	243 596	25	Pressure part take-over on the right	239 849
5	Entry cam at the bottom - 1.5 E10 - E14	216 328	26	Tuck pressure part	239 621
6	Plate on the left	230 988	27	Limit cam E6.2	218 306
7	Plate in the middle	231 035	29	Pointer E10 – E14	210 349
8	Plate on the right	231 036	30	Screw	210 335
9	Cam on the left	231 039	31	Stitch cam on the left E6.2	236 392
10	Cam on the right	231 041	32	Stitch cam on the right E6.2	236 393
11	Cam in the middle	231 040	33	Tuck limit cam E6.2	236 429
12	Cam	227 923	34	Raising cam plate E4 - E12	204 372
13	Cam	210 254	35	Receiving cam E6.2	236 943
14	Cam on the left E5 - E14	212 265	36	Knitting raising cam E6.2 without split	236 766
15	Cam on the right E5 – E14	212 266			
16	Cam on the left	236 192		Knitting raising cam with split E6.2 Accessory	237 948
17	Cam on the right	236 193			
18	Cam on the left E5 – E14	212 274	48	Cam on the right E5-14	212 275
19	Cam	210 252	49	Entry cam on the left -1.5 E10 - E14	216 329
20	Offering cam	210 185	50	Entry cam on the right -1.5 E10 - E14	216 330
21	Selector cam on the left	212 944	500	Cap screw M4x8	020 091
22	Selector cam on the right	212 947			

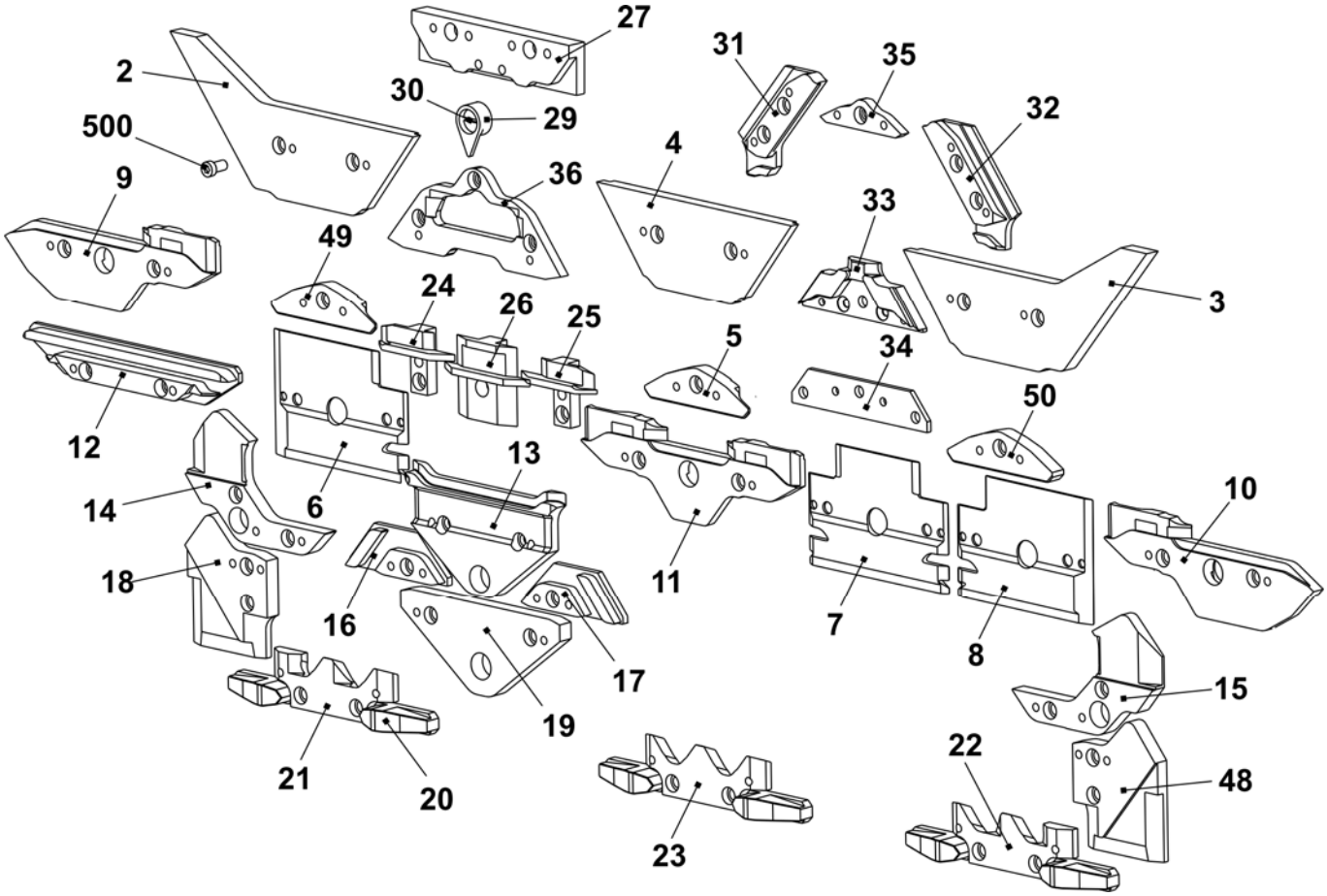

Cam box E6.2 (12m.10)

Pos	*Designation*		*ID*	*Pos*	*Designation*	*ID*
Σ	**Cam box set co. E12m.10**		**244 286**	42	Switching piece	240 281
1	Cam plate		241 760	58	Shoulder screw	239 626
37	Loop forming cam on the right co. E12 – E14		214 088	505	Shim 0.03x12x75	022 828
38	Loop forming cam on the left co. E12 – E14		214 089	506	Shim 0.05x12x75	022 829
39	Rod guide element on the left		211 165	507	Shim 0.1x12x75	022 830
40	Rod guide element in the middle		211 166	508	Shim 0.2x12x75	022 831
41	Rod guide element on the right		211 168	509	Countersunk screw M3x4	023 142
	402	Spring rod	209 791			
	541	Disc 4.3x7x0.5	022 153			
	542	Circlip 3.2	021 019			
	543	Compression spring	023 344			

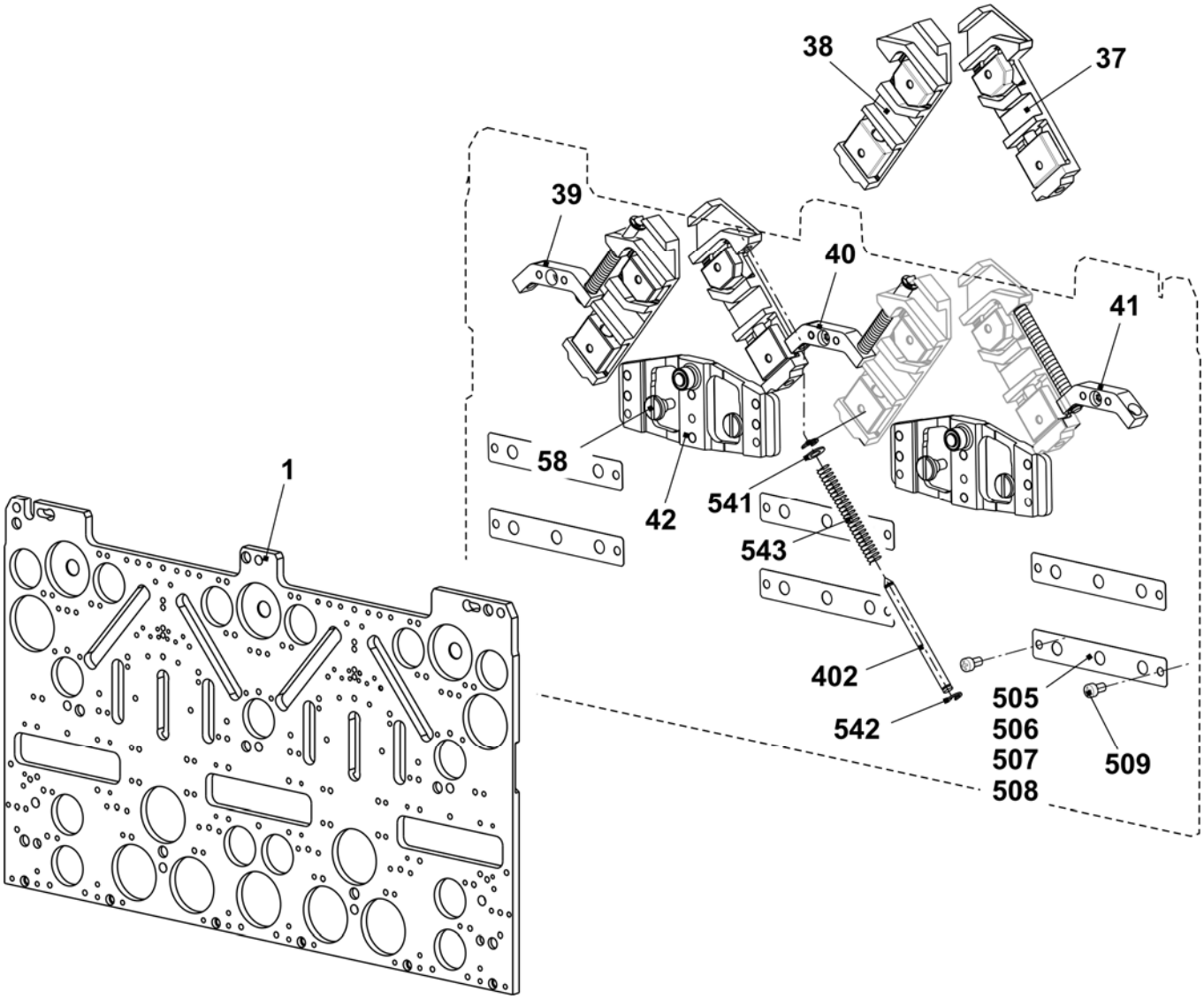

Cams E6.2 (12m.10)

Pos	Designation	ID	Pos	Designation	ID
2	Entry cam on the left	243 595	23	Selector cam	212 946
3	Entry cam on the right	243 597	24	Pressure part take-over on the left	239 848
4	Entry cam in the middle	243 596	25	Pressure part take-over on the right	239 849
5	Entry cam at the bottom - 1.5 E10 - E14	216 328	26	Tuck pressure part	239 621
6	Plate on the left	230 988	27	Limit cam E10	210 611
7	Plate in the middle	231 035	29	Pointer E10 – E14	210 349
8	Plate on the right	231 036	30	Screw	210 335
9	Cam on the left	231 039	31	Stitch cam on the left E10-E14 + E7.2	236 318
10	Cam on the right	231 041	32	Stitch cam on the right E10-E14 + E7.2	236 319
11	Cam in the middle	231 040	33	Tuck limit cam E10 + E7.2	236 345
12	Cam	227 923	34	Raising cam plate E4-12	204 372
13	Cam	210 254	35	Receiving cam E10 - E12	210 595
14	Cam on the left E5-14	212 265	36	Raising cam without split E10 – E12 + E7.2	237 993
15	Cam on the right E5-14	212 266			
16	Cam on the left	236 192		Raising cam with split E10 – E12 + E7.2 Accessory	213 300
17	Cam on the right	236 193			
18	Cam on the left E5-14	212 274	48	Cam on the right E5-14	212 275
19	Cam	210 252	49	Entry cam on the left -1.5 E10 - E14	216 329
20	Offering cam	210 185	50	Entry cam on the right -1.5 E10 - E14	216 330
21	Selector cam on the left	212 944	500	Cap screw M4x8	020 091
22	Selector cam on the right	212 947	60	Stitch cam at the rear on the right E10 - E12	236 320

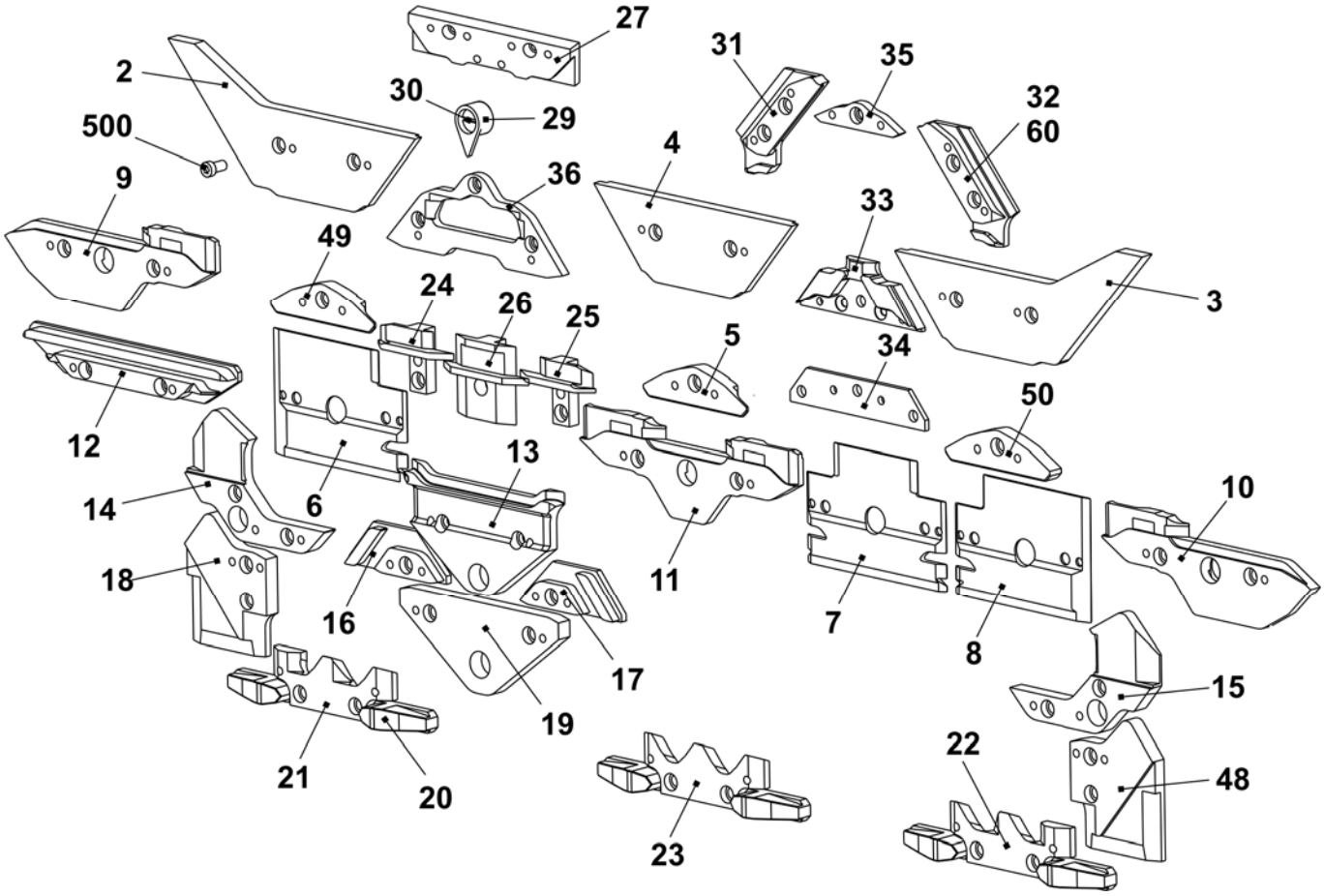

Cam box E7.2kw

Pos	Designation		ID	Pos	Designation	ID
Σ	**Cam box co. E7.2**		**242 274**	42	Switching piece	240 281
1	Cam plate		241 760	58	Shoulder screw	239 626
37	Loop forming cam on the right co. E12 – E14		214 088	505	Shim 0.03x12x75	022 828
38	Loop forming cam on the left co. E12 – E14		214 089	506	Shim 0.05x12x75	022 829
39	Rod guide element on the left		211 165	507	Shim 0.1x12x75	022 830
40	Rod guide element in the middle		211 166	508	Shim 0.2x12x75	022 831
41	Rod guide element on the right		211 168	509	Countersunk screw M3x4	023 142
	402	Spring rod	209 791			
	541	Disc 4.3x7x0.5	022 153			
	542	Circlip 3.2	021 019			
	543	Compression spring	023 344			

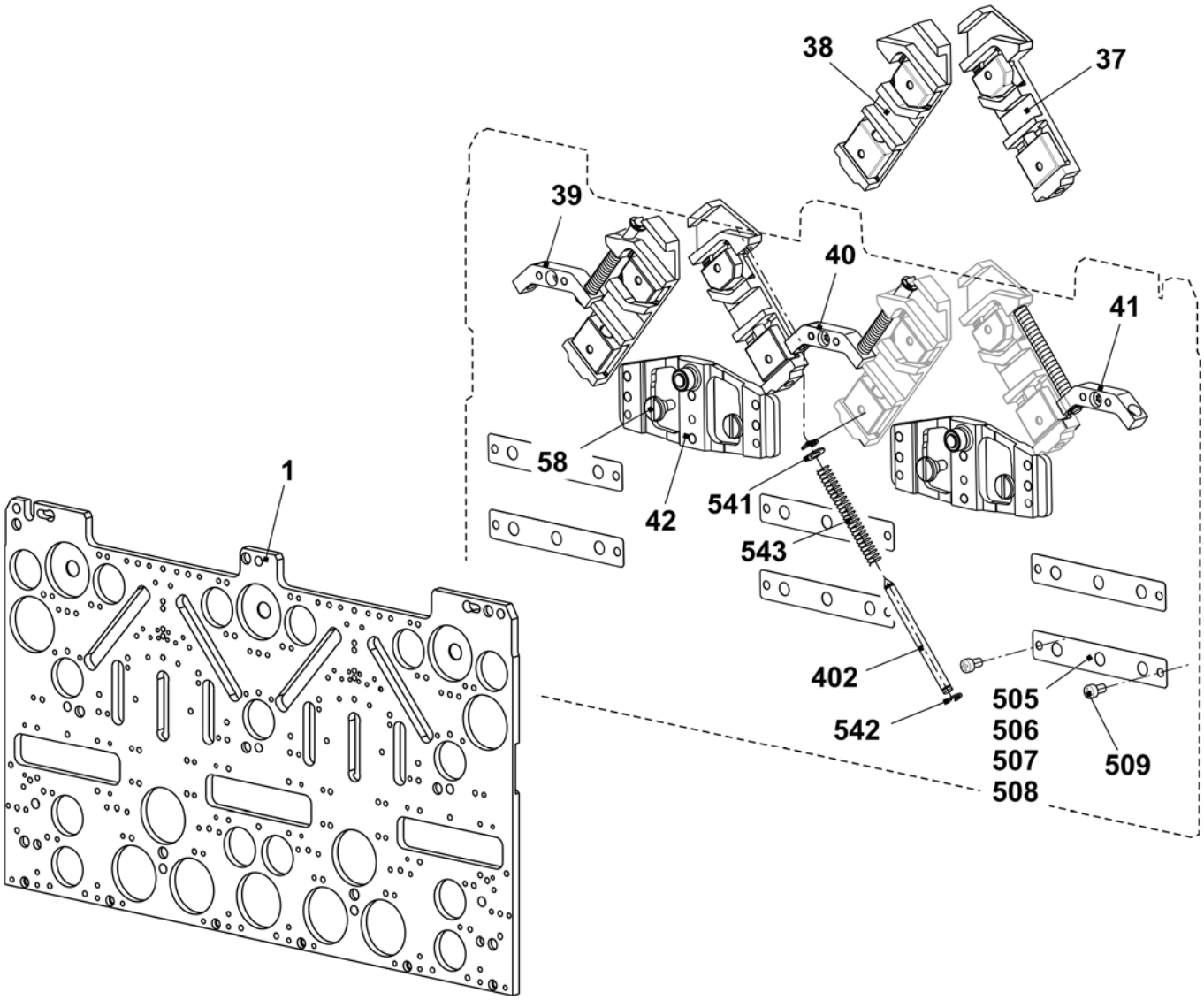

Cam box E7.2mg

Pos	Designation		ID	Pos	Designation	ID
Σ	**Cam box co. E7.2**		**243 919**	42	Switching piece	240 281
1	Cam plate		241 760	58	Shoulder screw	239 626
37	Loop forming cam on the right co. E12 – E14		214 088	505	Shim 0.03x12x75	022 828
38	Loop forming cam on the left co. E12 – E14		214 089	506	Shim 0.05x12x75	022 829
39	Rod guide element on the left		211 165	507	Shim 0.1x12x75	022 830
40	Rod guide element in the middle		211 166	508	Shim 0.2x12x75	022 831
41	Rod guide element on the right		211 168	509	Countersunk screw M3x4	023 142
	402	Spring rod	209 791			
	541	Disc 4.3x7x0.5	022 153			
	542	Circlip 3.2	021 019			
	543	Compression spring	023 344			

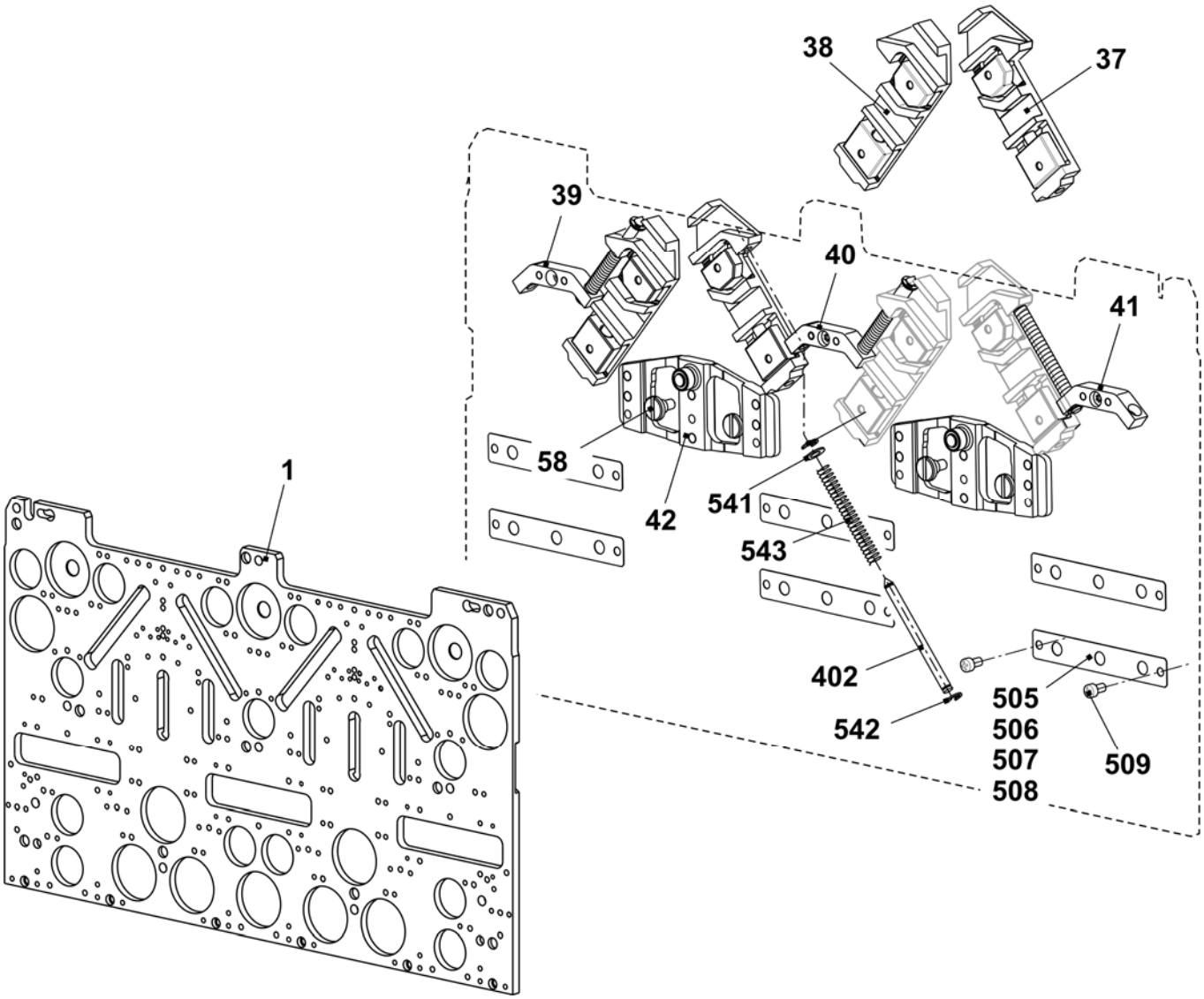

Cams E7.2mg

Pos	Designation	ID	Pos	Designation	ID
2	Entry cam on the left	243 595	23	Selector cam	212 946
3	Entry cam on the right	243 597	24	Pressure part take-over on the left	239 848
4	Entry cam in the middle	243 596	25	Pressure part take-over on the right	239 849
5	Entry cam at the bottom - 1.5 E10 - E14	216 328	26	Tuck pressure part	239 621
6	Plate on the left	230 988	27	Limit cam E10	210 611
7	Plate in the middle	231 035	29	Pointer E10 – E14	210 349
8	Plate on the right	231 036	30	Screw	210 335
9	Cam on the left	231 039	31	Stitch cam on the left E10-E14 + E7.2	236 318
10	Cam on the right	231 041	32	Stitch cam on the right E10-E14 + E7.2	236 319
11	Cam in the middle	231 040	33	Tuck limit cam E10 + E7.2	236 345
12	Cam	227 923	34	Raising cam plate E4-12	204 372
13	Cam	210 254	35	Receiving cam E10 - E12	210 595
14	Cam on the left E5-14	212 265	36	Raising cam without split E10 – E12 + E7.2	237 993
15	Cam on the right E5-14	212 266			
16	Cam on the left	236 192		Raising cam with split E10 – E12	213 300 Accessory
17	Cam on the right	236 193			
18	Cam on the left E5-14	212 274	48	Cam on the right E5-14	212 275
19	Cam	210 252	49	Entry cam on the left -1.5 E10 - E14	216 329
20	Offering cam	210 185	50	Entry cam on the right -1.5 E10 - E14	216 330
21	Selector cam on the left	212 944	500	Cap screw M4x8	020 091
22	Selector cam on the right	212 947			

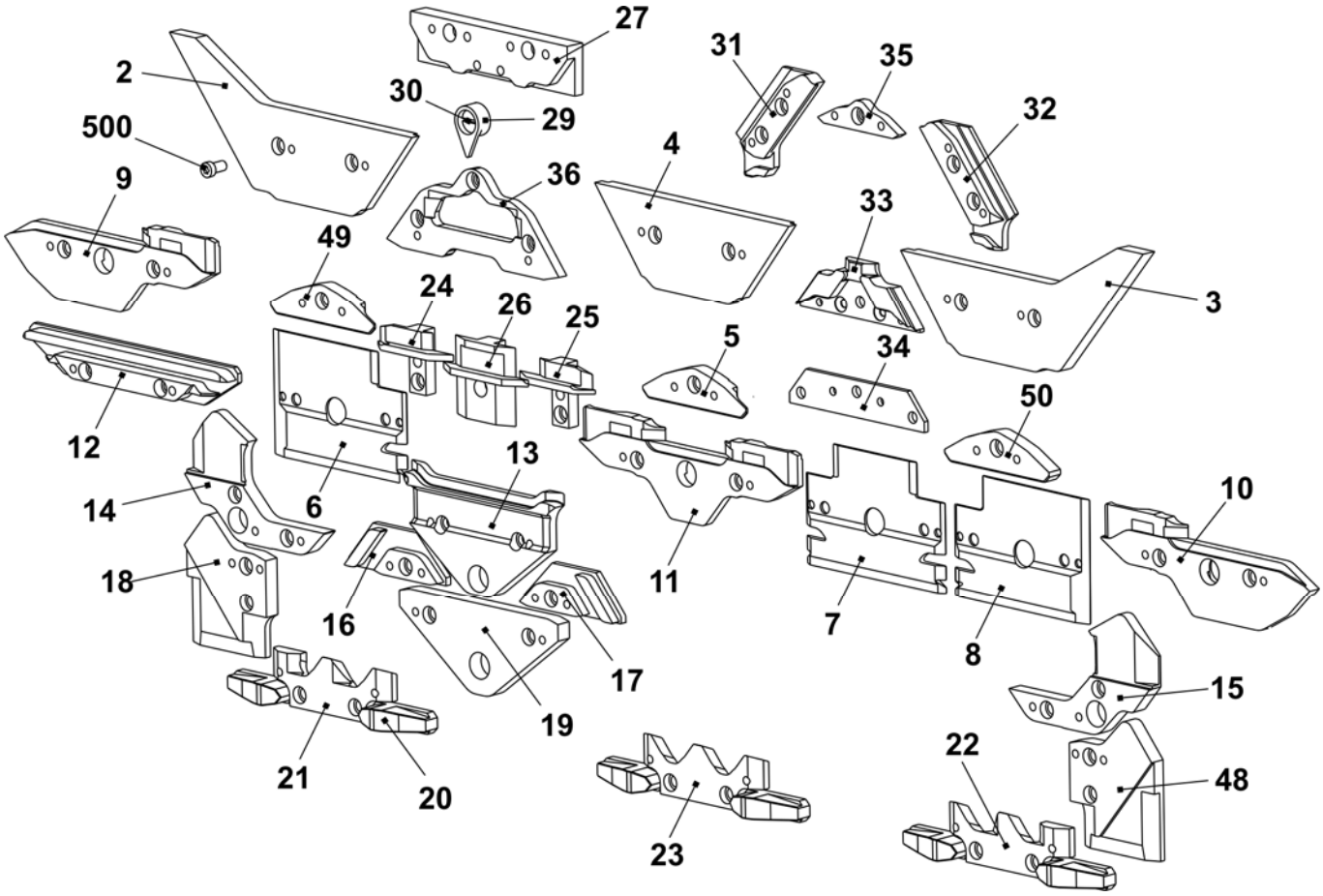

Cam box E8.2mg

Pos	Designation	ID	Pos	Designation	ID
Σ	**Cam box set co. E16 - E20**	**243 920**	42	Switching piece	240 281
1	Cam plate	241 760	58	Shoulder screw	239 626
37	Stitch forming cam on the right co. E16 - E20	221 123	505	Shim 0.03x12x75	022 828
38	Stitch forming cam on the left co. E16 - E20	221 124	506	Shim 0.05x12x75	022 829
39	Rod guide element on the left	211 165	507	Shim 0.1x12x75	022 830
40	Rod guide element in the middle	211 166	508	Shim 0.2x12x75	022 831
41	Rod guide element on the right	211 168	509	Countersunk screw M3x4	023 142
	402 Spring rod	209 791			
	541 Disc 4.3x7x0.5	022 153			
	542 Circlip 3.2	021 019			
	543 Compression spring	023 344			

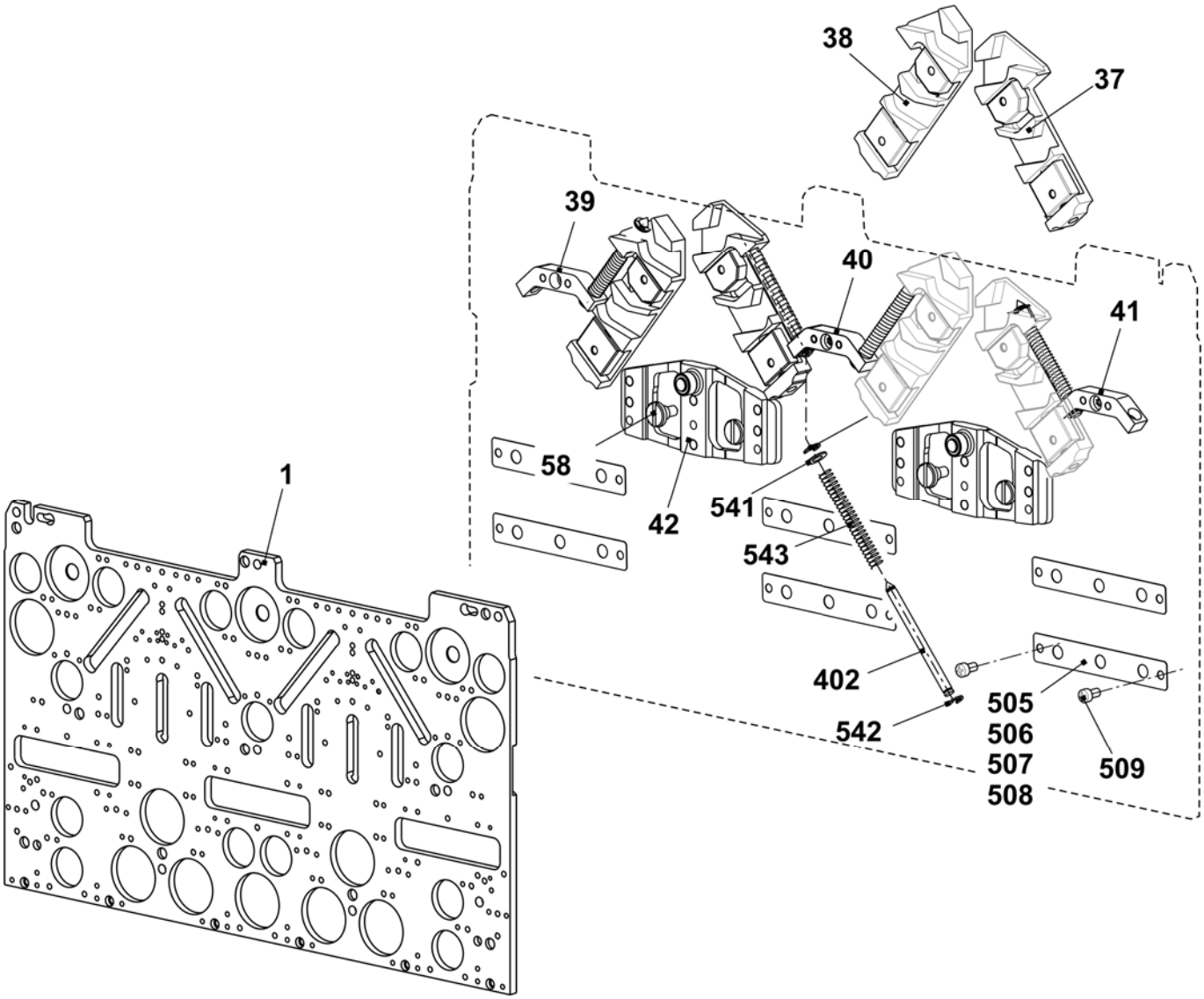

Cams E8.2mg

Pos	Designation	ID	Pos	Designation	ID
2	Entry cam on the left	243 595	23	Selector cam	212 946
3	Entry cam on the right	243 597	24	Pressure part take-over on the left	239 848
4	Entry cam in the middle	243 596	25	Pressure part take-over on the right	239 849
5	Entry cam at the bottom E16 - E20	220 842	26	Tuck pressure part	239 621
6	Plate on the left	230 988	27	Limit cam E9.2	228 978
7	Plate in the middle	231 035	29	Pointer E16 - E20	224 383
8	Plate on the right	231 036	30	Screw	210 335
9	Cam on the left	231 039	31	Stitch cam on the left E16 - E20	220 870
10	Cam on the right	231 041	32	Stitch cam on the right E16 - E20	220 871
11	Cam in the middle	231 040	33	Tuck limit cam E9.2	239 458
12	Cam	227 923	34	Raising cam plate E4-12	204 372
13	Cam	210 254	35	Receiving cam E9.2	228 977
14	Cam on the left E5 - E14	212 265	36	Raising cam without split E16 - E18 + E9.2	239 457
15	Cam on the right E5 - E14	212 266			
16	Cam on the left	236 192		Raising cam with split E16 - E18 + E9.2 Accessories	239 742
17	Cam on the right	236 193			
18	Cam on the left E5 - E14	212 274	48	Cam on the right E5 - E14	212 275
19	Cam	210 252	49	Entry cam on the left E16 - E20	220 841
20	Offering cam	210 185	50	Entry cam on the right E16 - E20	220 843
21	Selector cam on the left	212 944	500	Cap screw M4x8	020 091
22	Selector cam on the right	212 947			

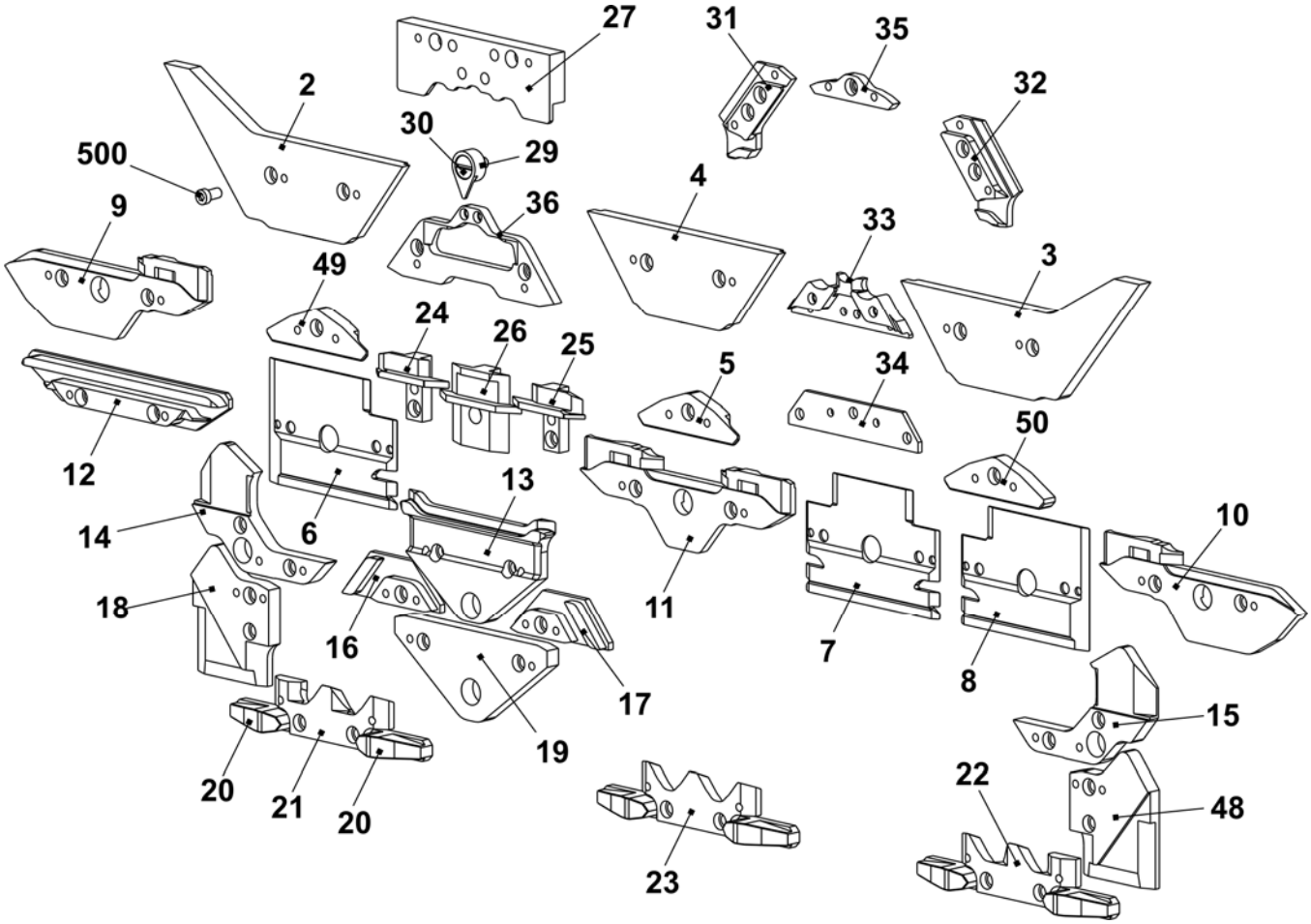

Spare parts package carriage guide bar

Pos	Designation	ID		Pos	Designation	ID
Σ	**Spare parts package carriage guide bar 84"**	**252 993**		501	Shim 0.05x22x42	243 291
1	Carriage guide bar	242 486		502	Shim 0.10x22x42	243 292
2	Adjusting eccentric	241 219		503	Shim 0.20x22x42	243 293
500	Shim 0.03x22x42	243 289		510*	Cap screw M8X20	020 141

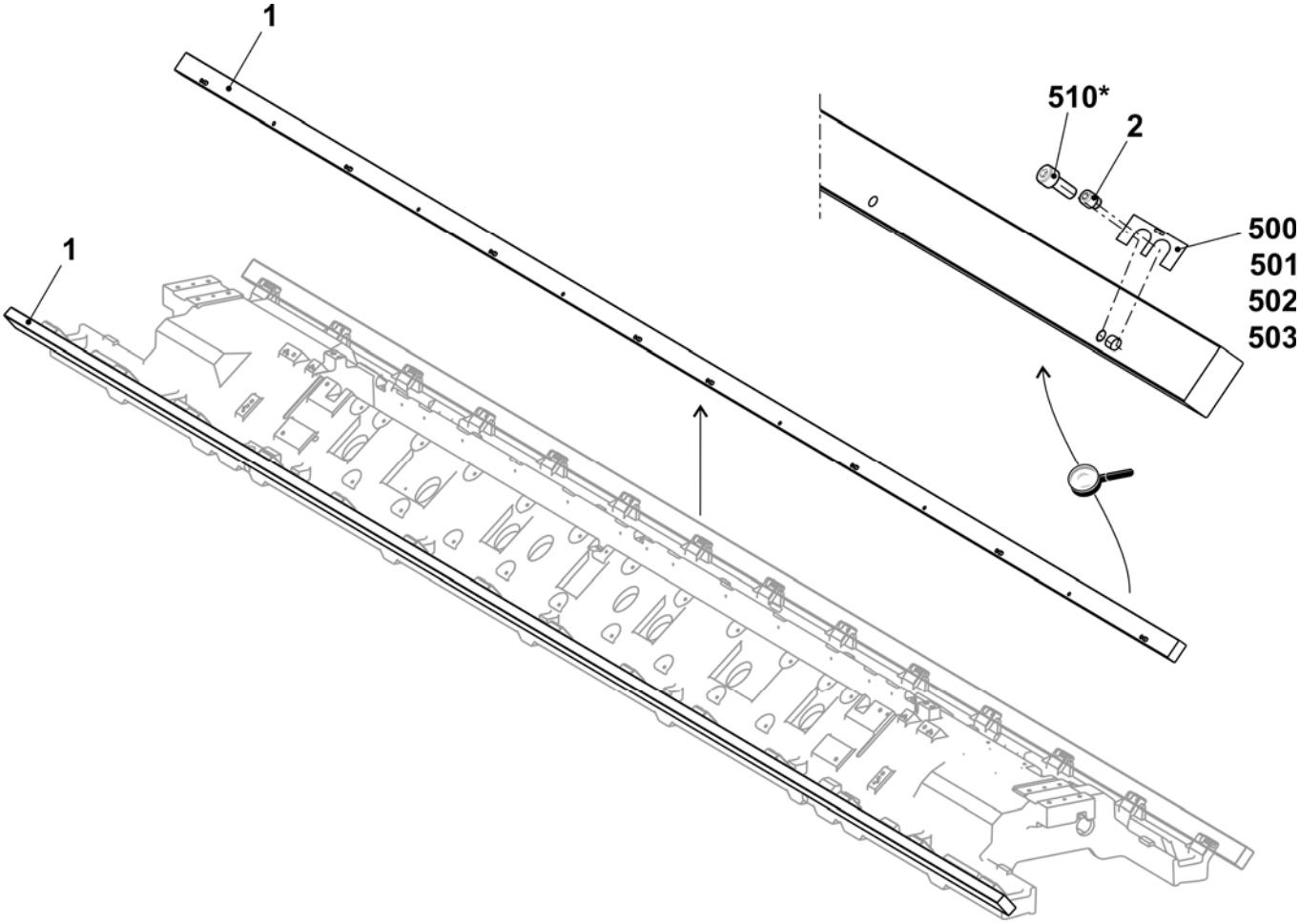

Main take-down

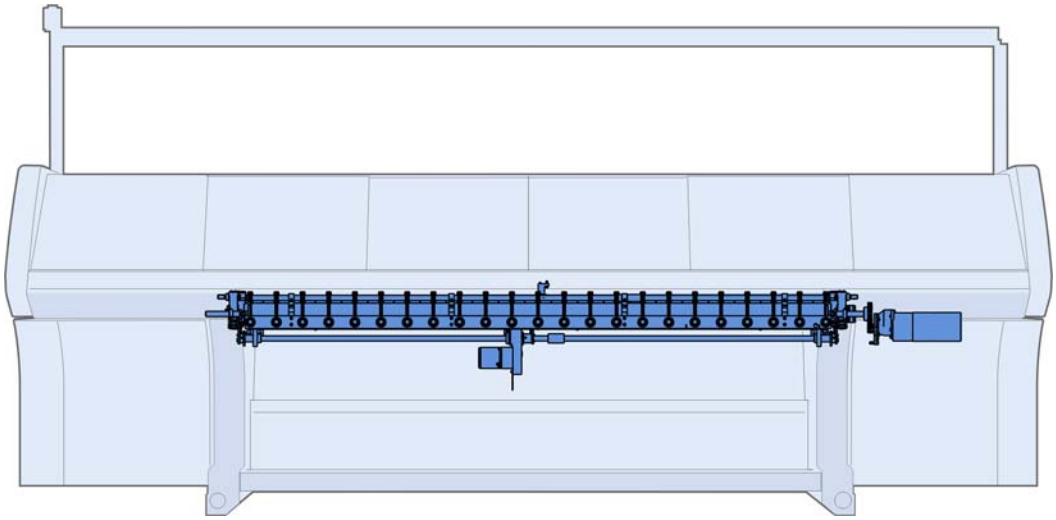

Main take-down

Pos	Designation	ID	Pos	Designation	ID
Σ	**Main take-down**				
1	Main take-down left	255 257	4	Main take-down on/off co. 84"	253 387
2	Main take-down right	255 258			
3	Main take-down in the middle E5 + E7 + E8 + E10 + E12 + E14 + E5m.4 + E7m.5 + 7m.8 + E8m.7 + E10m.12 + E6.2(12m.10) + E2,5.2 + E3,5.2 + E5.2 + E6.2 + E7.2	255 249			
	Main take-down in the middle E16 + E18 + E8.2	255 283			

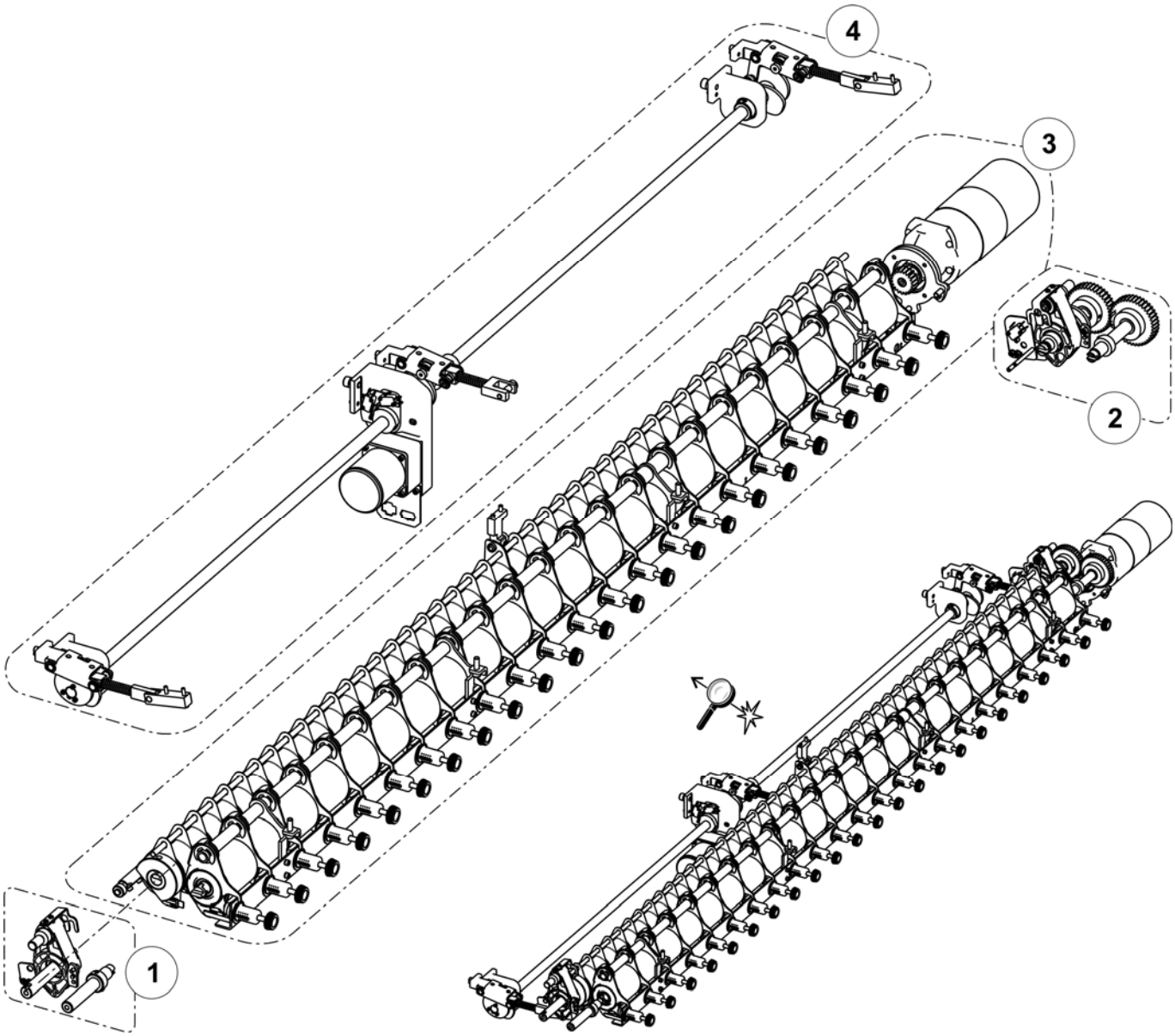

Main take-down left

Pos	Designation		ID	Pos	Designation	ID
Σ	**Main take-down left**		**255 257**	11	Floating axle on the left	237 354
3	Shaft on the left at the rear		237 818	19	Stop point	252 503
5	Bolt		208 538	500	Screw 50x15	251 728
7	Mounting plate on the left co.		231 725	504	U-washer 18	023 295
9	Swivel-mounted bearing		253 247	505	Locking ring 18x1.2	020 955
	9a	Swivel-mounted bearing	253 200	507	Set collar	020 938
	9b	Sheet metal support	253 212	508	Set screw	022 684
	590	Screw 35x10	251 729	511	Cap screw M6x12	020 134

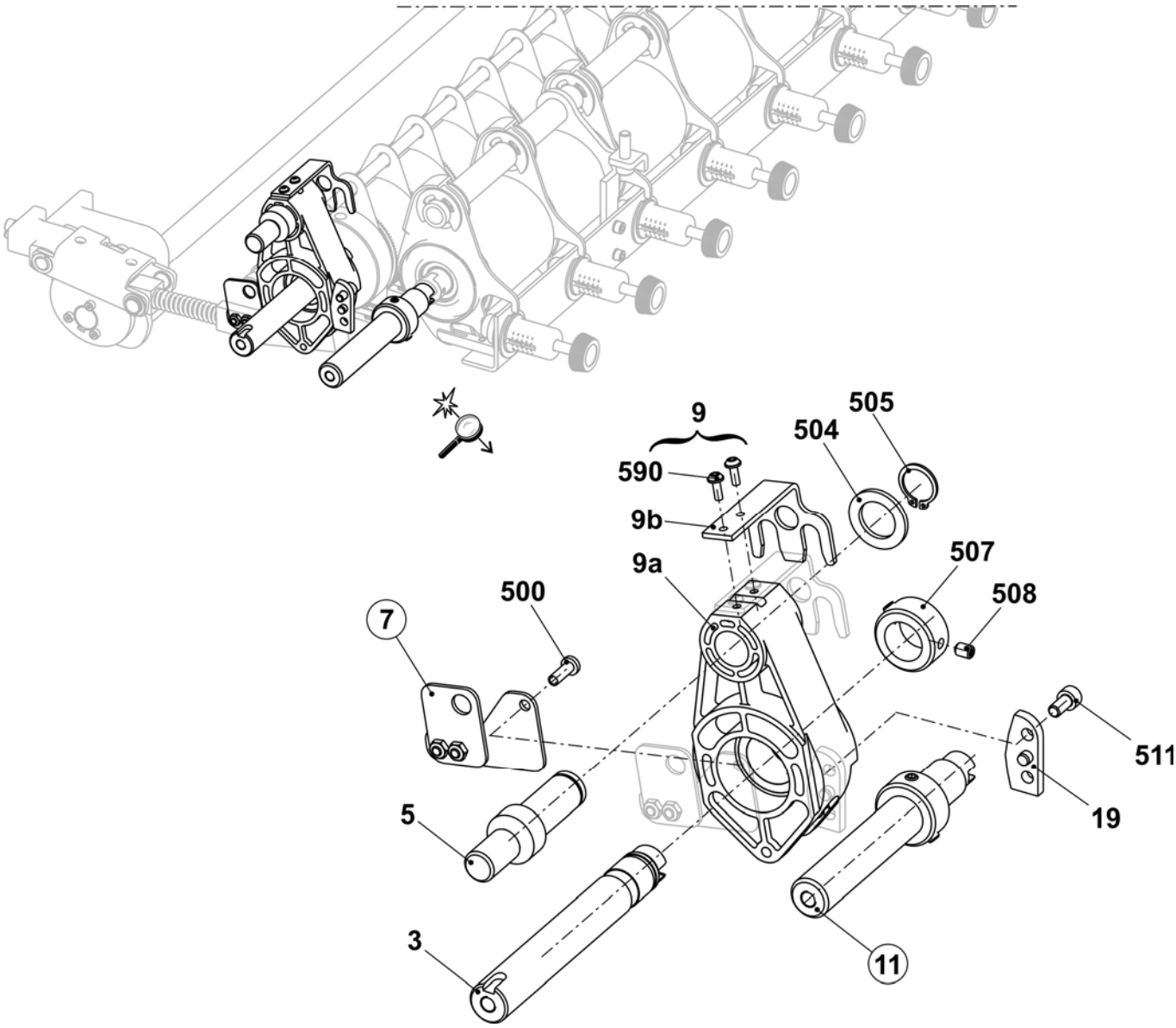

Main take-down right

Pos	Designation		ID	Pos	Designation	ID
Σ	**Main take-down right**		**255 258**	10	Floating axle on the right	237 353
1	Clutch set		253 260	19	Stop point	252 503
5	Bolt		208 538	500	Screw 50x15	251 728
8	Mounting plate on the right co.		240 069	504	U-washer 18	023 295
9	Swivel-mounted bearing		253 247	505	Locking ring 18x1.2	020 955
	9a	Swivel-mounted bearing	253 200	507	Set collar A20	020 938
	9b	Sheet metal support	253 212	508	Set screw M6x8	022 684
	590	Screw 35x10	251 729	511	Cap screw M6x12	020 134

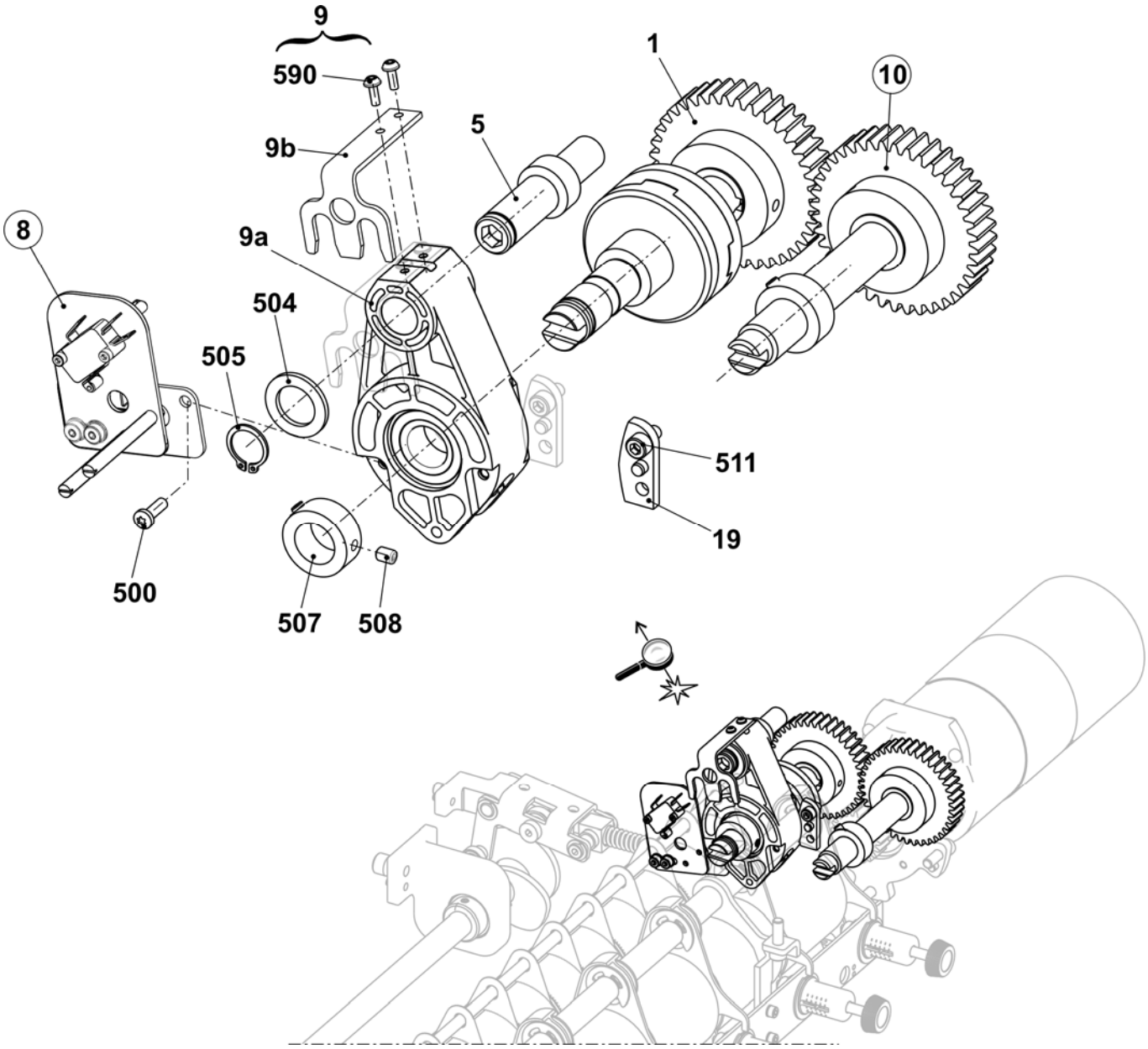

Mounting plate

Pos	Designation	ID
Σ L	**Mounting plate on the left co.**	**231 725**
1	Mounting plate on the left	231 541
2	Retaining plate on the left	231 539
500	Countersunk screw M5x10	023 247
501	Serrated lock washer J5.3	022 489

Pos	Designation	ID
Σ R	**Mounting plate on the right co.**	**240 069**
1	Mounting plate on the right	240 068
2	Shoulder screw	240 067
3	Retaining plate on the right	240 066
500	Hexagon nut M4-6	022 536
501	Microswitch	026 259
502	Cap screw M3x16	022 583
503	Cap screw M5x8	244 278
504	U-washer 5-200	020 871

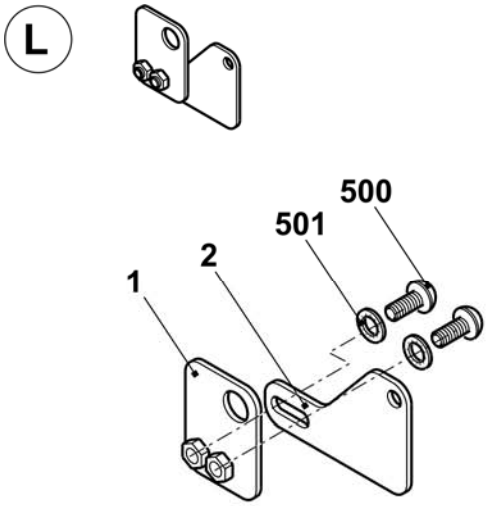

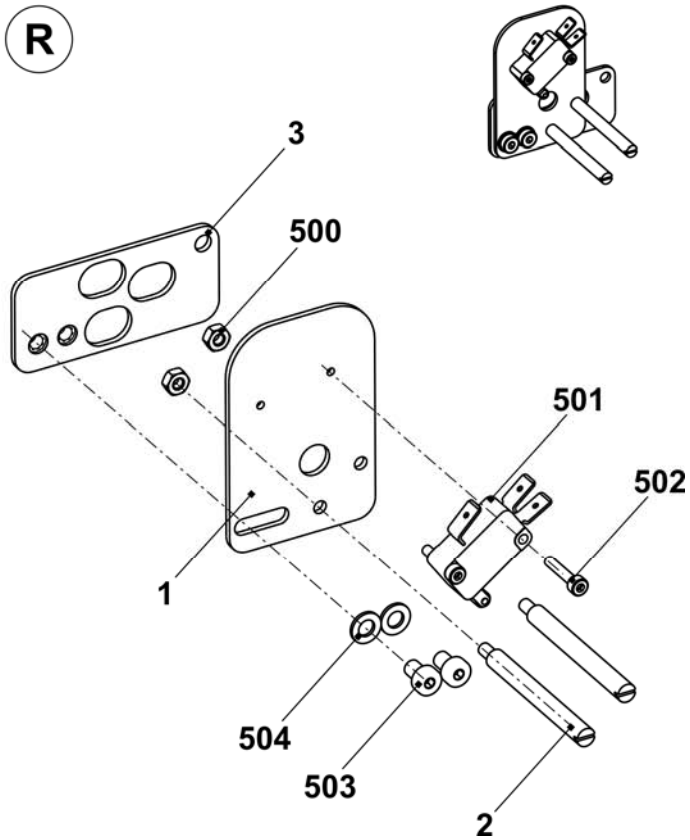

Floating axle

Pos	Designation	ID
Σ L	**Floating axle on the left**	**237 354**
1	Shaft on the left at the front	237 334
500	Set collar	020 938
501	Set screw M6x8	022 684

Pos	Designation	ID
Σ R	**Floating axle on the right**	**237 353**
1	Shaft on the right at the front	237 340
2	Gear wheel z=40, m=2	213 744
500	Set collar	020 938
501	Set screw M6x8	022 684
502	Feather key A 6x6x25	023 017

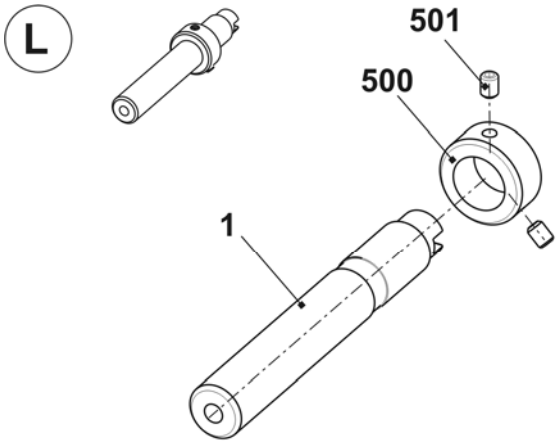

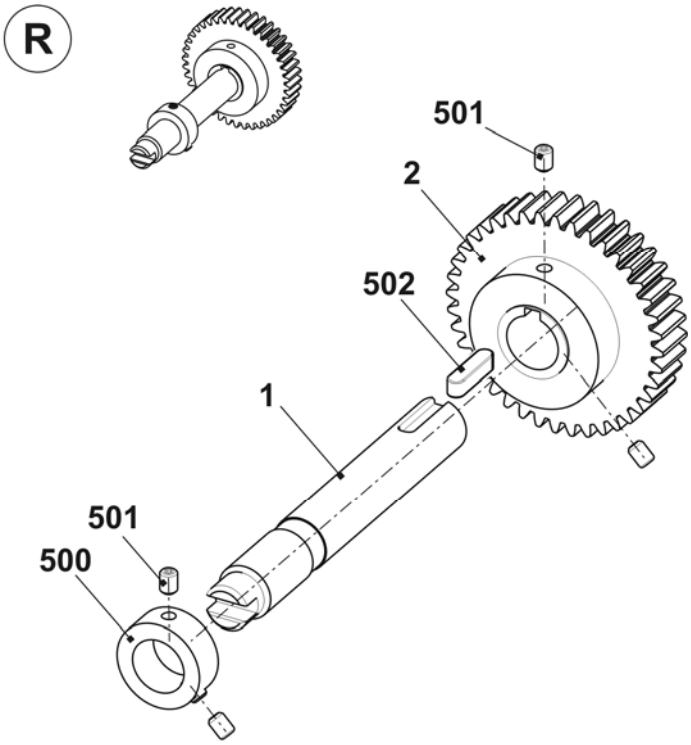

Main take-down in the middle

Pos	Designation		ID	Pos	Designation	ID
Σ	**Main take-down in the middle**			13	Take-down roller at the rear co.	
	E5 + E7 + E8 + E10 + E12 + E14 + E5m.4 + E7m.5 + 7m.8 + E8m.7 + E10m.12 + E6.2(12m.10) + E2,5.2 + E3,5.2 + E5.2 + E6.2 + E7.2		**255 249**		E5 + E7 + E8 + E10 + E12 + E14 + E5m.4 + E7m.5 + 7m.8 + E8m.7 + E10m.12 + E6.2(12m.10) + E2,5.2 + E3,5.2 + E5.2 + E6.2 + E7.2	243 810
	E16 + E18 + E8.2mg		**255 283**		E16 + E18 + E8.2mg	243 889
4	Stripper angle at the rear co.		241 935	15	Take-down roller at the front co.	253 390
12	Motor take-down unit co.		253 803	20	Connection cable winding plate	241 703
	12a	Motor take-down unit + comb	214 279	509	Cap screw M8X25	020 142
	12b	Flange	241 754	510	Oval head screw M4x6	235 450
	512	Hexagon screw M6X16	020 356			

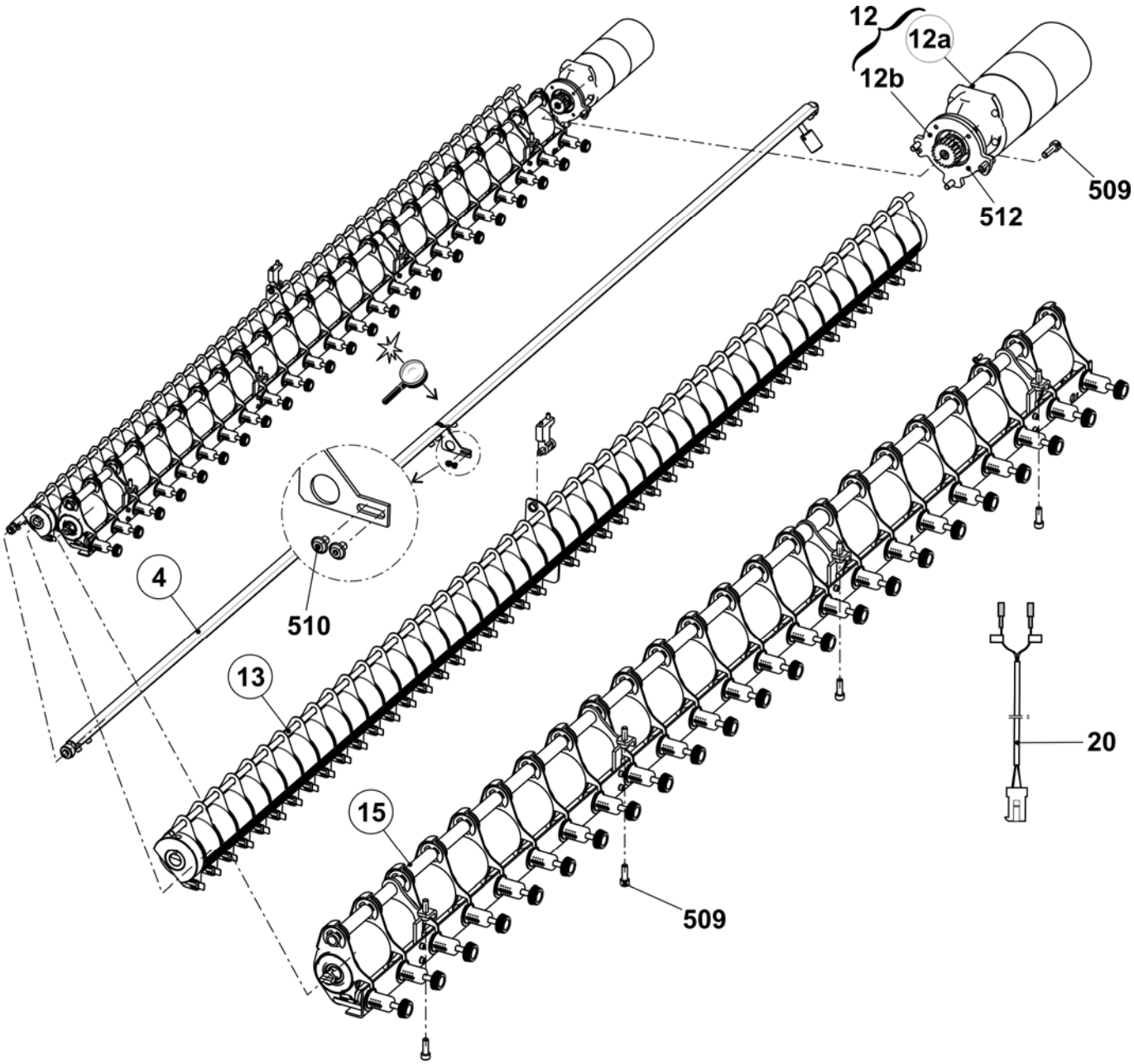

Stripper angle

Pos	Designation	ID	Pos	Designation	ID
Σ	**Stripper angle at the rear co.**	**241 935**	6	Strap	235 731
1	Stripper angle on the right	241 933	7	Stripper angle on the left	241 934
2	Shaft	240 127	8	Setting weight	229 248
3	Cam	209 278	500	Cap screw M5x8	023 319
4	Bolt	228 310	501	Set collar	020 934
5	Axle	228 803	502	Set screw M5x6	022 738

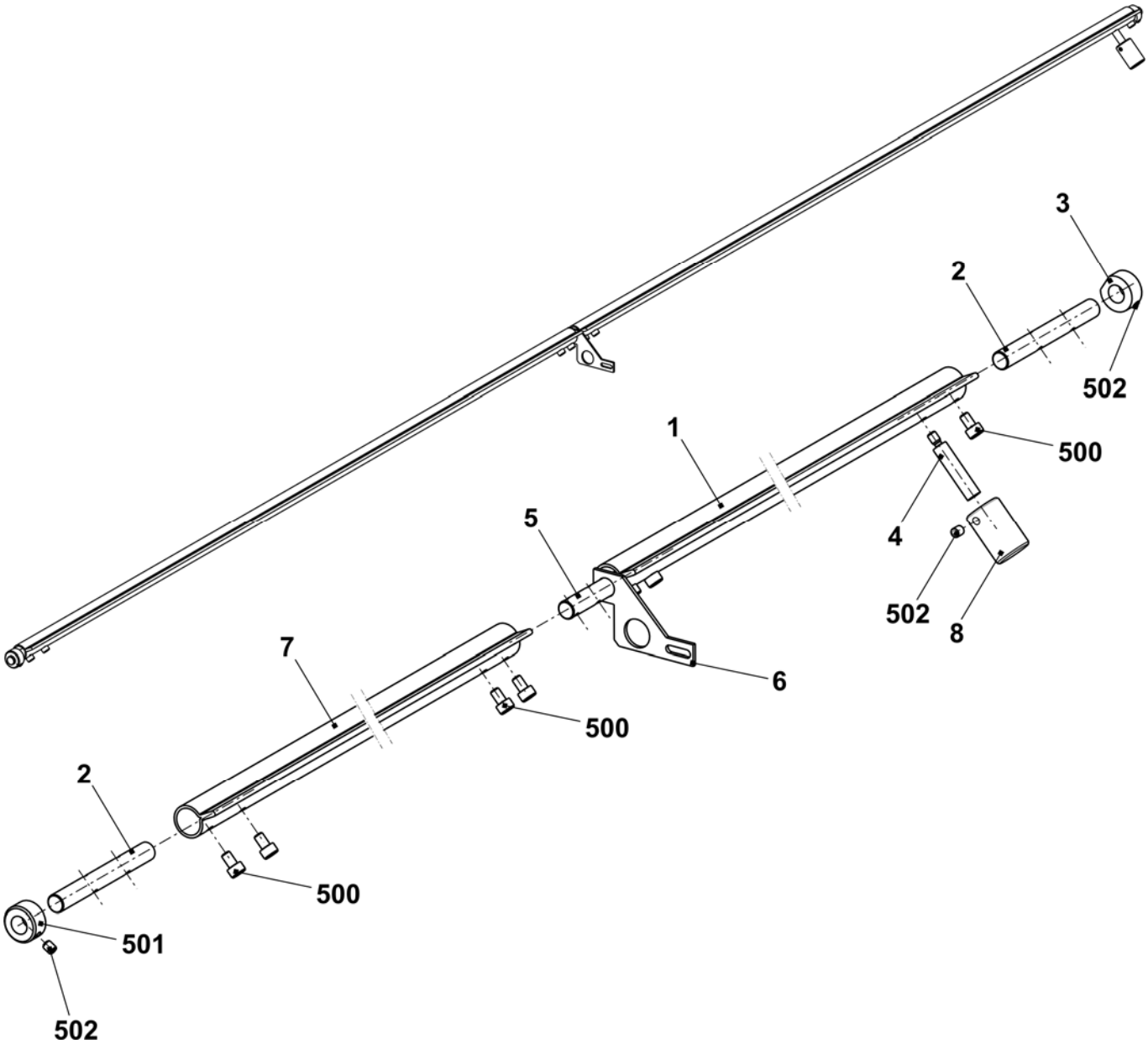

Impulse giver and motor

Pos	Designation	ID		Pos	Designation	ID
Σ	**Motor take-down unit + comb**	**214 279**		500	Cap screw M4x8	022 501
2	Impulse disc	208 716		504	U-washer 4-200	020 879
3	Photoelectric sensor take-down + comb	300 744		506	Circlip	022 774
4	Cover	212 262		507	Shim ring 4x8x1	023 369

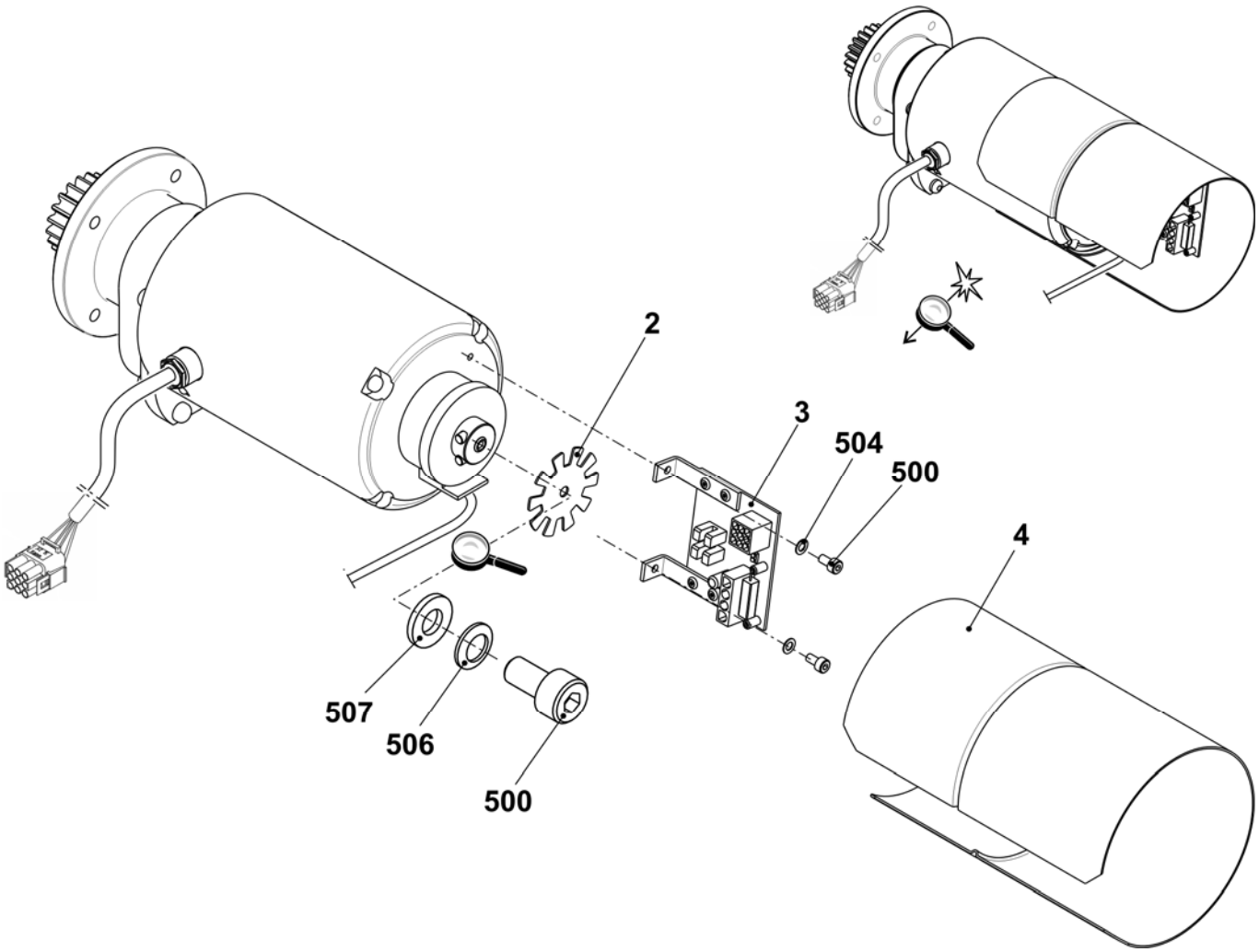

Rear take-down roller

Pos	Designation	ID	Pos	Designation	ID
Σ	**Take-down roller at the rear co.**		1	Roller	
	E5 + E7 + E8 + E10 + E12 + E14 + E5m.4 + E7m.5 + 7m.8 + E8m.7 + E10m.12 + E6.2(12m.10) + E2,5.2 + E3,5.2 + E5.2 + E6.2 + E7.2	**243 810**		E5 + E7 + E8 + E10 + E12 + E14 + E5m.4 + E7m.5 + 7m.8 + E8m.7 + E10m.12 + E6.2(12m.10) + E2,5.2 + E3,5.2 + E5.2 + E6.2 + E7.2	206 770
	E16 - E18 + E8.2mg	**243 889**		E16 - E18 + E8.2mg	231 400
2	Stripper	241 612	10c	Ring	222 895
3	Shaft	237 190	9	Stop ring on the left	222 910
4	Ring on the left	250 573	11	Brush	225 819
5	Ring on the right	250 574	12	Rod	237 192
6	Spacer slide	222 062	500	Set screw M10x15-4	020 635
7	Stop ring on the left	204 369	501	Setting pin 6x32	020 685
8	Spacer slide	240 104	510	Ball bearing 16007	021 697
10	Support	232 578	511	Slide bearing GFM-101216-06	023 280
10a	Supporting plate	232 512	512	Slide bearing GFM-101216-09	023 356
10b	Bearing	232 571			

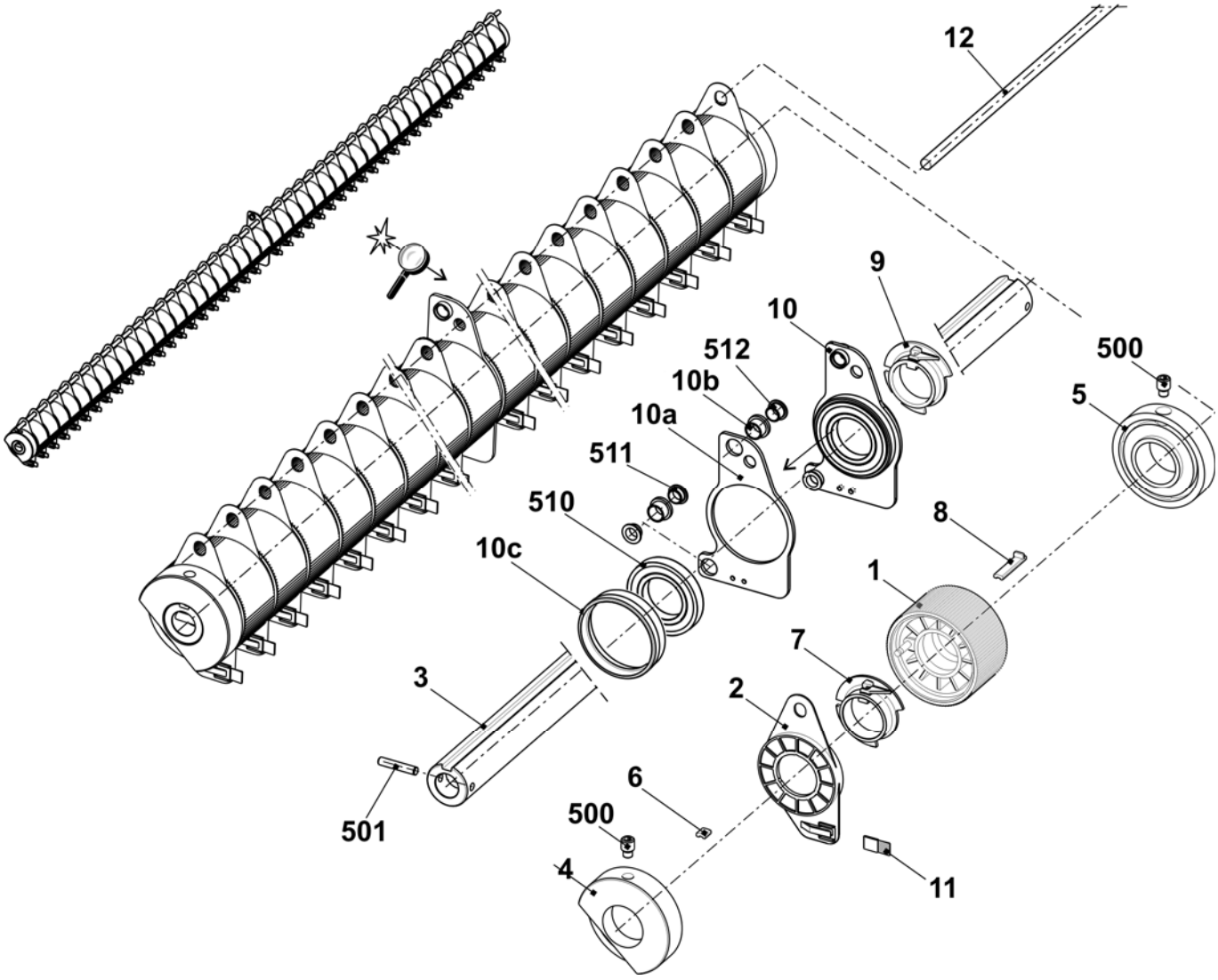

Front take-down roller

Pos	Designation	ID		Pos	Designation	ID
Σ	**Take-down roller at the front co.**	**253 390**		4	Fixed piece	221 935
1	Take-down roller at the front	253 423		500	Compression spring 1x10x30	023 741
2	Angle rail co.	242 316		501	Cap screw M5x12	020 132
3	Pressure sleeve	220 911		502	U-washer 5-200	020 880

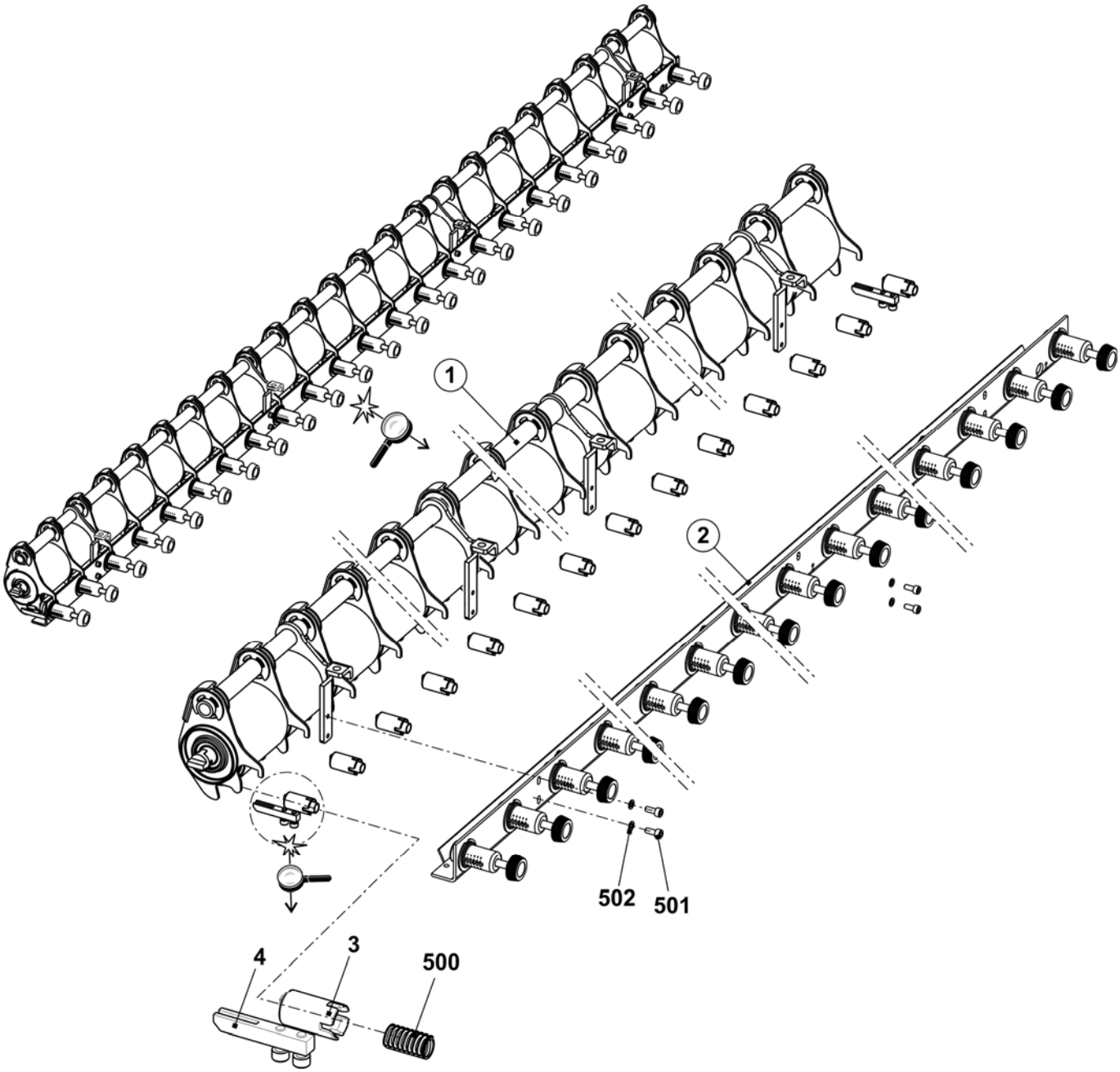

Front roller elements

Pos	Designation		ID
Σ	**Take-down roller at the front**		**253 423**
1	Bearing support on the left co.		221 225
	1aa	Adaptor	221 132
	1ab	Universal joint	221 137
	1b	Bearing support	220 913
	1c	Gear wheel	220 910
	510	Cap screw M5x20	020 133
	511	U-washer 5	023 542
	515	Spring dowel sleeve 4x20	023 551
2	Support		251 557
3	Bearing support co.		221 241
	3a	Bearing support	220 913
	3b	Gear wheel	220 910
	531	Hexagon nut M5-8	023 541
	532	Cap screw M5x30	022 396

Pos	Designation		ID
4	Roller		220 905
5	Tube		237 191
6	Bearing support on the right co.		221 240
	1aa	Universal joint	221 137
	1ab	Adaptor	221 132
	1b	Bearing support	220 913
	1c	Gear wheel	220 910
	510	Cap screw M5x20	020 133
	511	U-washer 5	023 542
	515	Spring dowel sleeve 4x20	023 551
7	Distance pipe on the right		253 407
8	Distance pipe on the left		253 408
500	Circlip		021 025

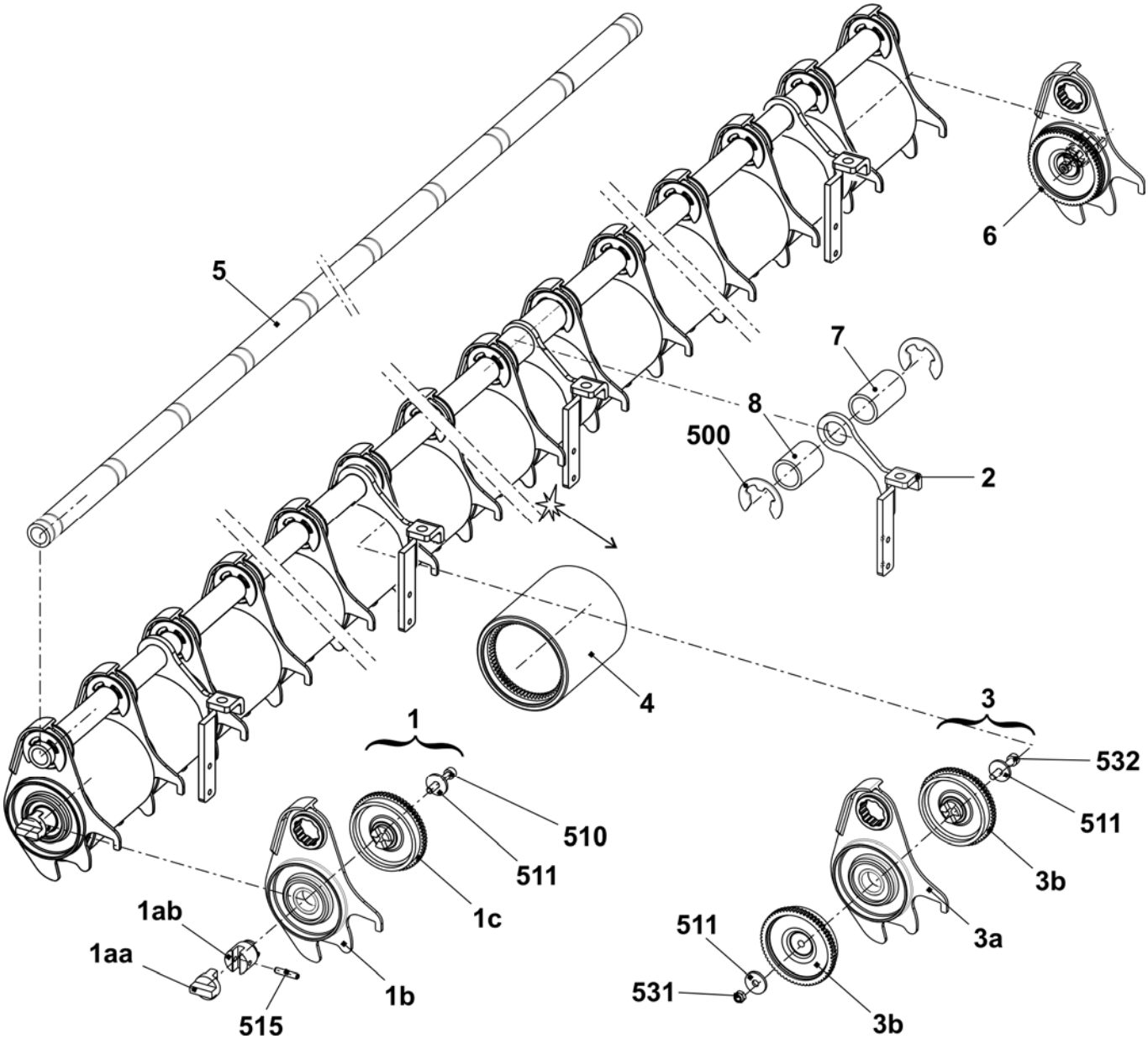

Pressure angle rail

Pos	Designation	ID		Pos	Designation	ID
Σ	**Angle rail co.**	**242 316**		500	U-washer 6	022 431
1	Switch co. with cable	221 265		501	Hexagon nut M5-8	023 541
2	Spring flange	242 327		502	Compression spring 0.8x9.2x27.5	023 537
3	Angle rail	242 277		503	Cap screw M2x12	023 522
4	Winding plate	237 195		504	U-washer 2-200	022 908
5	Locking ring	242 325		505	Shoulder screw M5x20x5	023 675

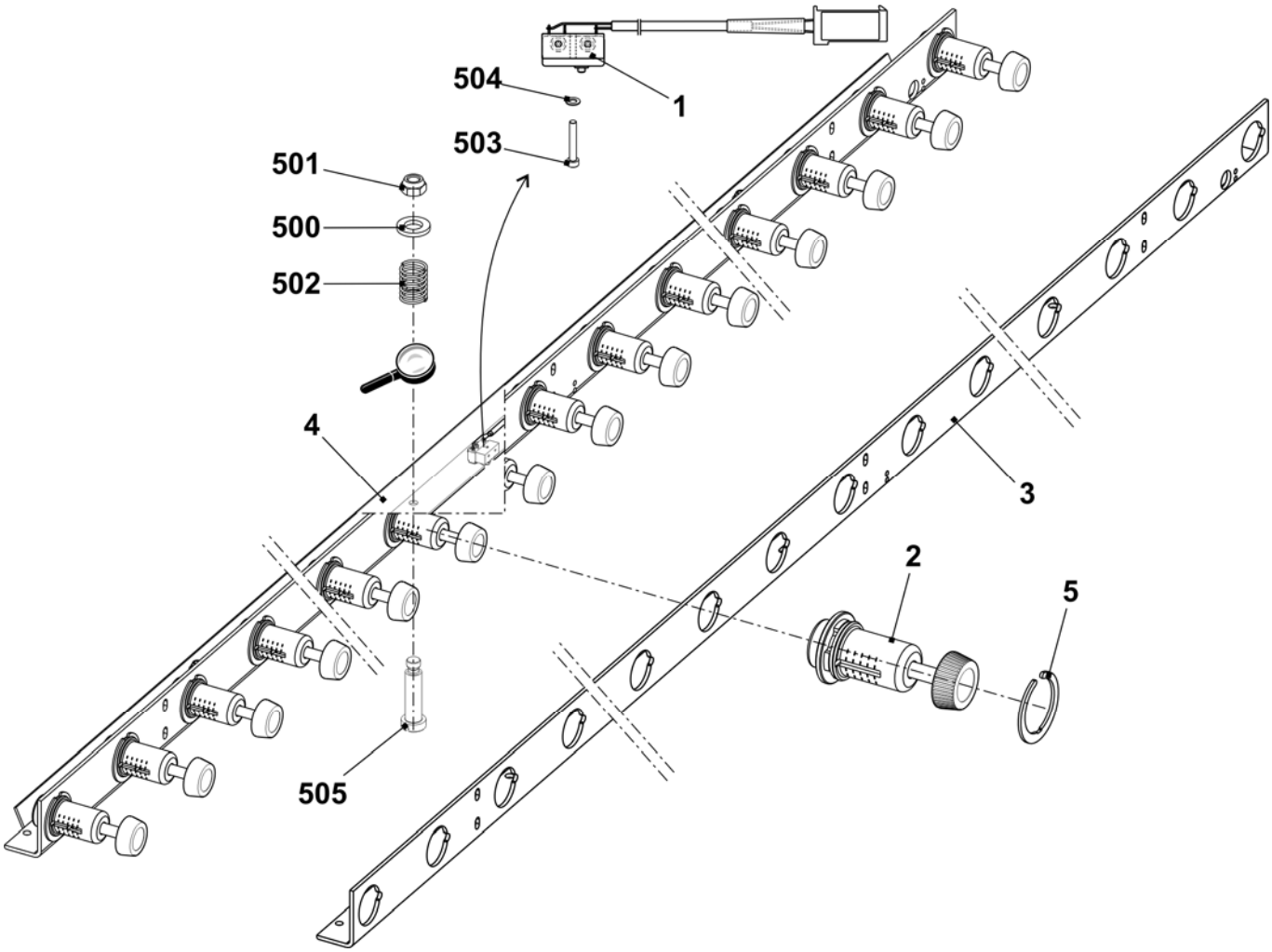

Take-down closing device

Pos	Designation		ID	Pos	Designation	ID
Σ	**Main take-down on/off co.**		**253 387**	19	Swivel support on the right co.	
1	Motor co.			20	Swivel holder on the left co.	
	1a	Motor 25W	232 456	21	Swivel holder in the middle co.	
	1b	Gear	234 983	22	Cable switch HAAB open	232 442
	510	Cap screw M5x55	023 321	500	Cap screw M5x8	023 319
2	Sheet metal		232 992	501	Set screw M4x4	022 875
3	Gear wheel		232 434	505	Cap screw M3x15	020 009
5	Support in the middle co.			506	Assembling element	209 543
	550	Deep groove ball bearing 6004-2Z	022 720	900	Cap screw M6x14	022 658
	551	Locking ring 42x1.75	023 293	901	Cap screw M10x16	023 895
11	Retaining plate of limit switch		235 190	902	Srew M50x30	253 257
12	Microswitch XGK2-S21 250 VAC		210 510	903	Cap screw M10x25	023 751

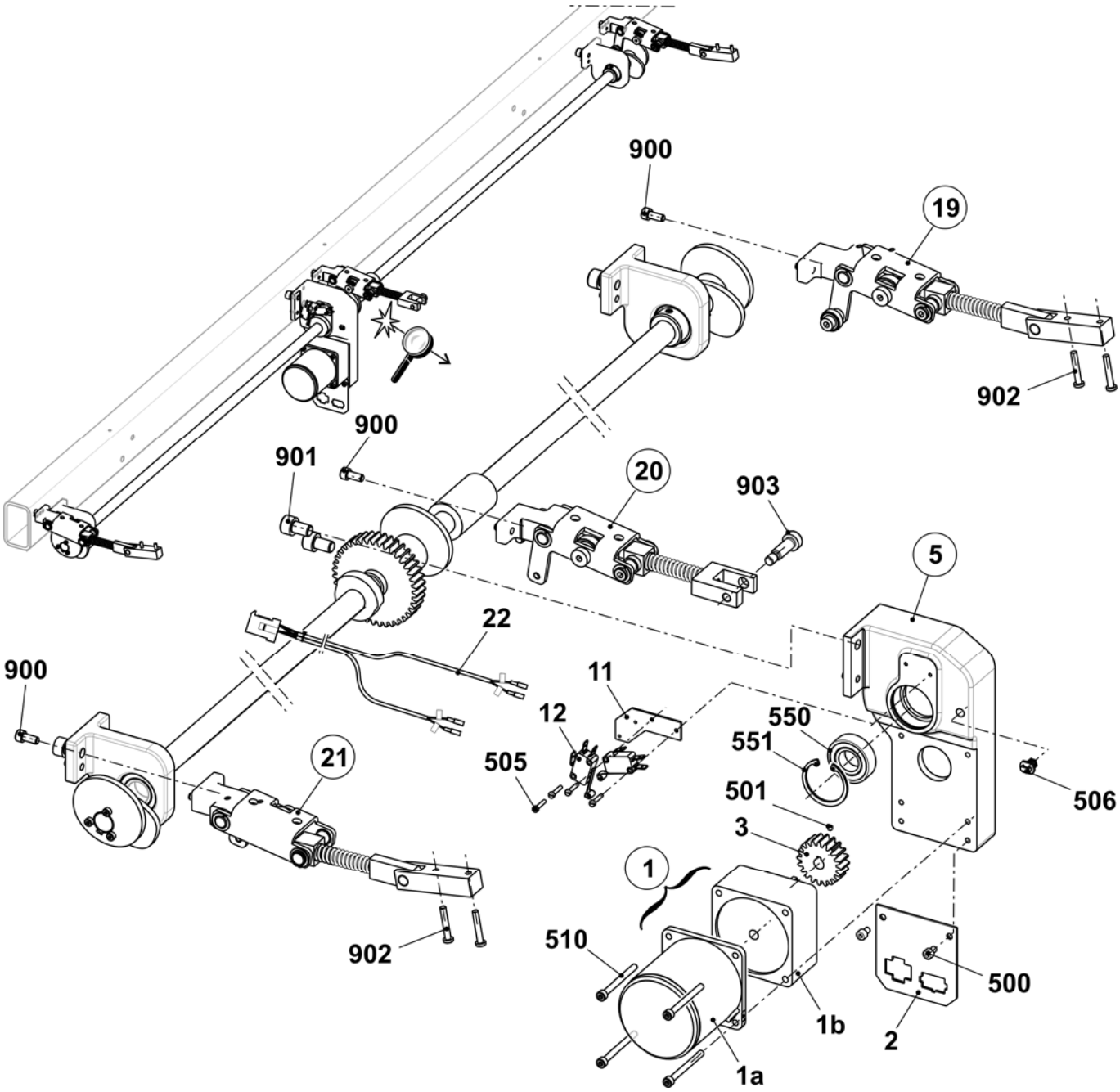

Continuation take-down closing device

Pos	Designation		ID		Pos	Designation	ID
Σ	**Main take-down on/off co.**		**253 387**		15	Guide bush	234 876
4	Gear wheel		213 744		16	Guide bush	235 623
6	Shaft		237 180		17	Eccentric	232 382
7	Shaft		237 181		18	Distance pipe	235 128
8	Spacer		232 385		502	Feather key A 6x6x25	023 017
9	Trip cam		232 383		503	Set screw M6x8	023 723
10	Coupling		232 604		504	Set screw M6x5	023 192
13	Support on the outside co.		235 248		508	Set collar A20	020 938
	13a	Support	234 780		510	Cap screw M4x25	023 302
	513	Deep groove ball bearing 6004-2Z	022 720		511	Cap screw M4x14	023 604
14	Eccentric		235 135		901	Cap screw M10x16	023 895

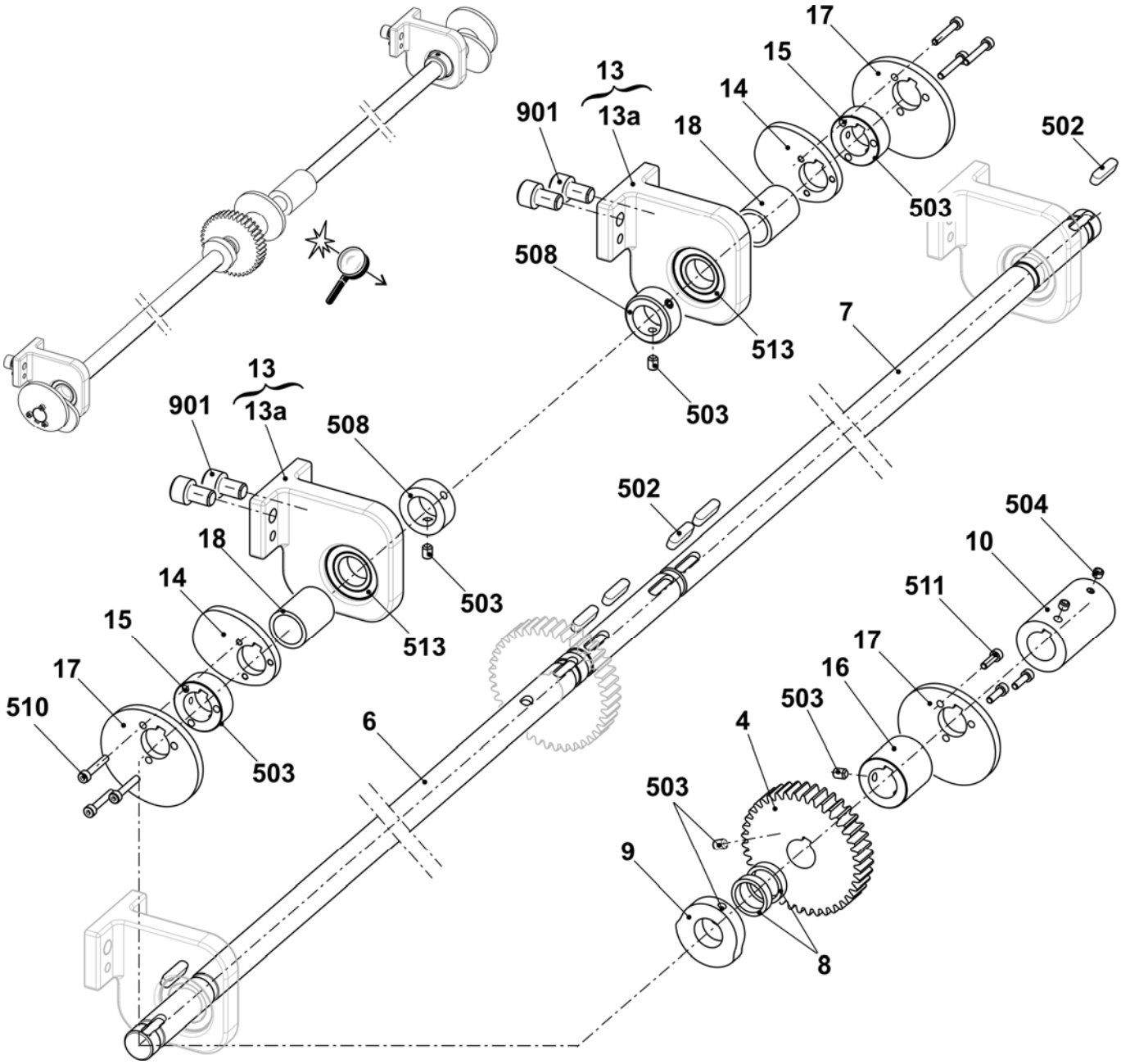

Right swivel support

Pos	Designation	ID	Pos	Designation	ID
Σ	**Swivel support on the right co.**		11	Lever	253 199
1	Support	239 163	500	Deep groove ball bearing 619/8-2RS	023 728
2	Bearing pin	239 164	501	Deep groove ball bearing 6000-2Z	022 599
3	Bow	238 974	502	Hexagon nut M8-8	022 843
	3a Clip bearing 11-MCM-12-04	023 639	503	Adjusting washer 10x16x2	023 600
4	Shoulder screw	239 133	504	Slide bearing GFM-081014-06	023 358
5	Distance bush	239 134	505	Slide bearing GSM-0810-10	023 896
6	Shoulder screw	239 132	506	Shim ring 12x18x1	023 315
7	Swivel-mounted bearing	239 100	507	Locking ring 12x1	020 951
8	Bearing bolt	239 117	508	Compression spring 2.5x12.5x67.5	023 743
9	Spring mandrel on the inside	232 388	509	Dowel pin 10x20	023 616
10	Lever	238 370	510	Slide bearing GSM-1012-10	239 178

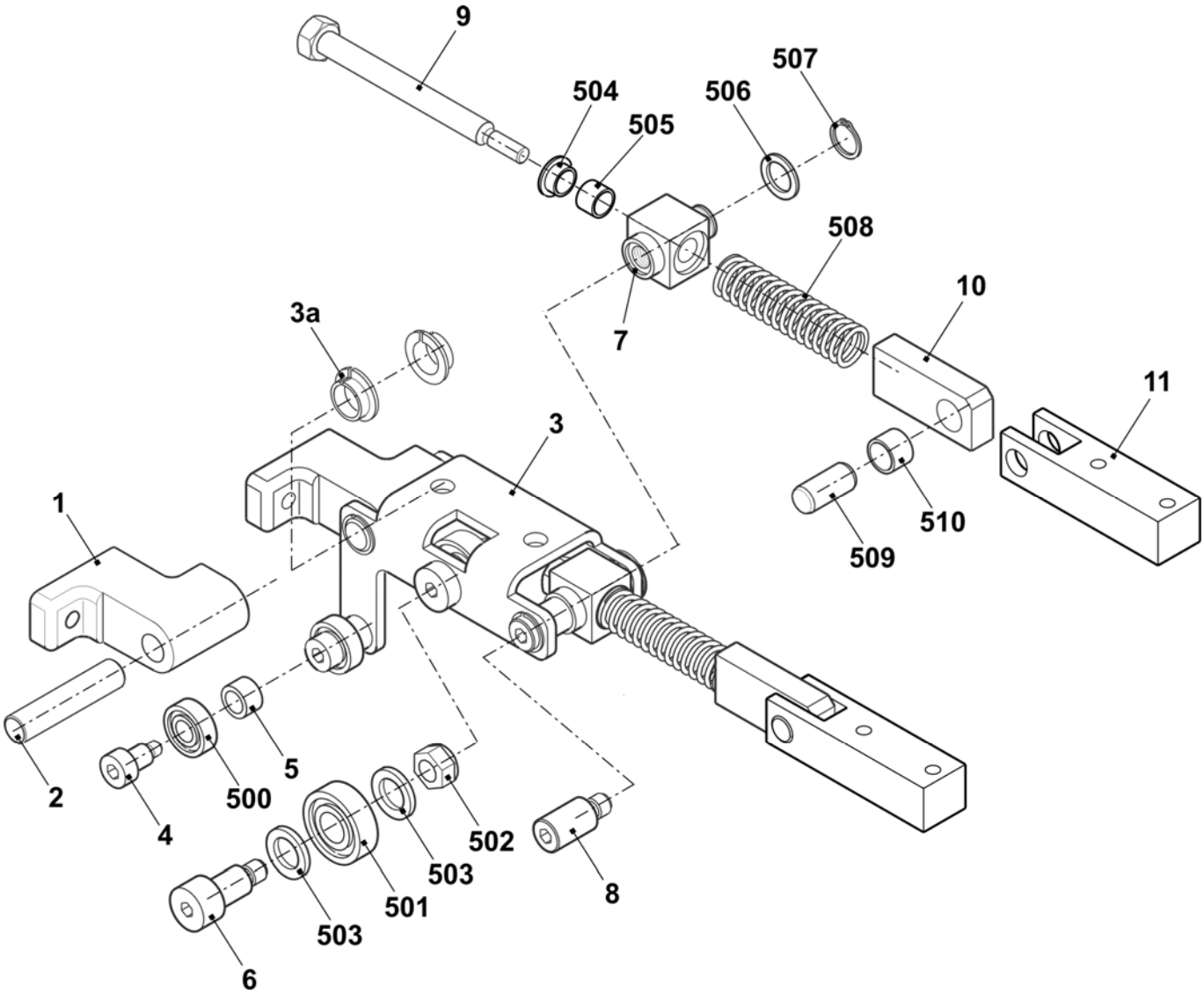

Swivel holder in the middle

Pos	Designation	ID	Pos	Designation	ID
Σ	**Swivel holder in the middle co.**		10	Angle	238 778
1	Support	239 163	501	Deep groove ball bearing 6000-2Z	022 599
2	Bearing pin	239 164	502	Hexagon nut M8-8	022 843
3	Bow	238 974	503	Adjusting washer 10x16x2	023 600
	3a Clip bearing 11-MCM-12-04	023 639	504	Slide bearing GFM-081014-06	023 358
6	Shoulder screw	239 132	505	Slide bearing GSM-0810-10	023 896
7	Swivel-mounted bearing	239 100	506	Shim ring 12x18x1	023 315
8	Bearing bolt	239 117	507	Locking ring 12x1	020 951
9	Spring mandrel on the inside	232 388	508	Compression spring 2.5x12.5x67.5	023 743

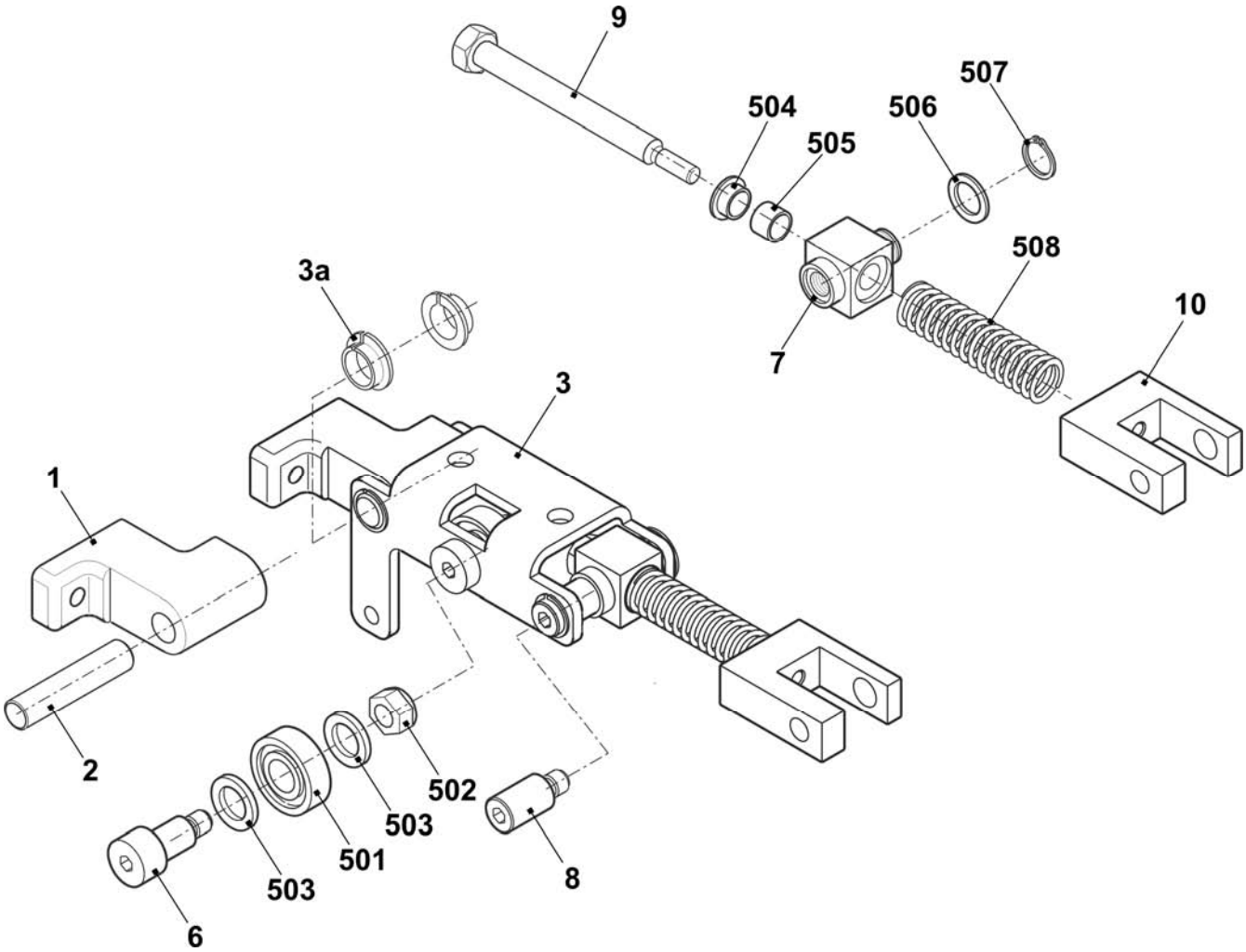

Left swivel holder

Pos	Designation	ID	Pos	Designation	ID
Σ	**Swivel holder on the left co.**		11	Lever	253 199
1	Support	239 163	500	Deep groove ball bearing 619/8-2RS	023 728
2	Bearing pin	239 164	501	Deep groove ball bearing 6000-2Z	022 599
3	Bow on the left	239 184	502	Hexagon nut M8-8	022 843
	3a Clip bearing 11-MCM-12-04	023 639	503	Adjusting washer 10x16x2	023 600
4	Shoulder screw	239 133	504	Slide bearing GFM-081014-06	023 358
5	Spacer	239 134	505	Slide bearing GSM-0810-10	023 896
6	Shoulder screw	239 132	506	Shim ring 12x18x1	023 315
7	Swivel-mounted bearing	239 100	507	Locking ring 12x1	020 951
8	Bearing bolt	239 117	508	Compression spring 2.5x12.5x67.5	023 743
9	Spring mandrel on the inside	232 388	509	Dowel pin 10x20	023 616
10	Lever	238 370	510	Slide bearing GSM-1012-10	239 178

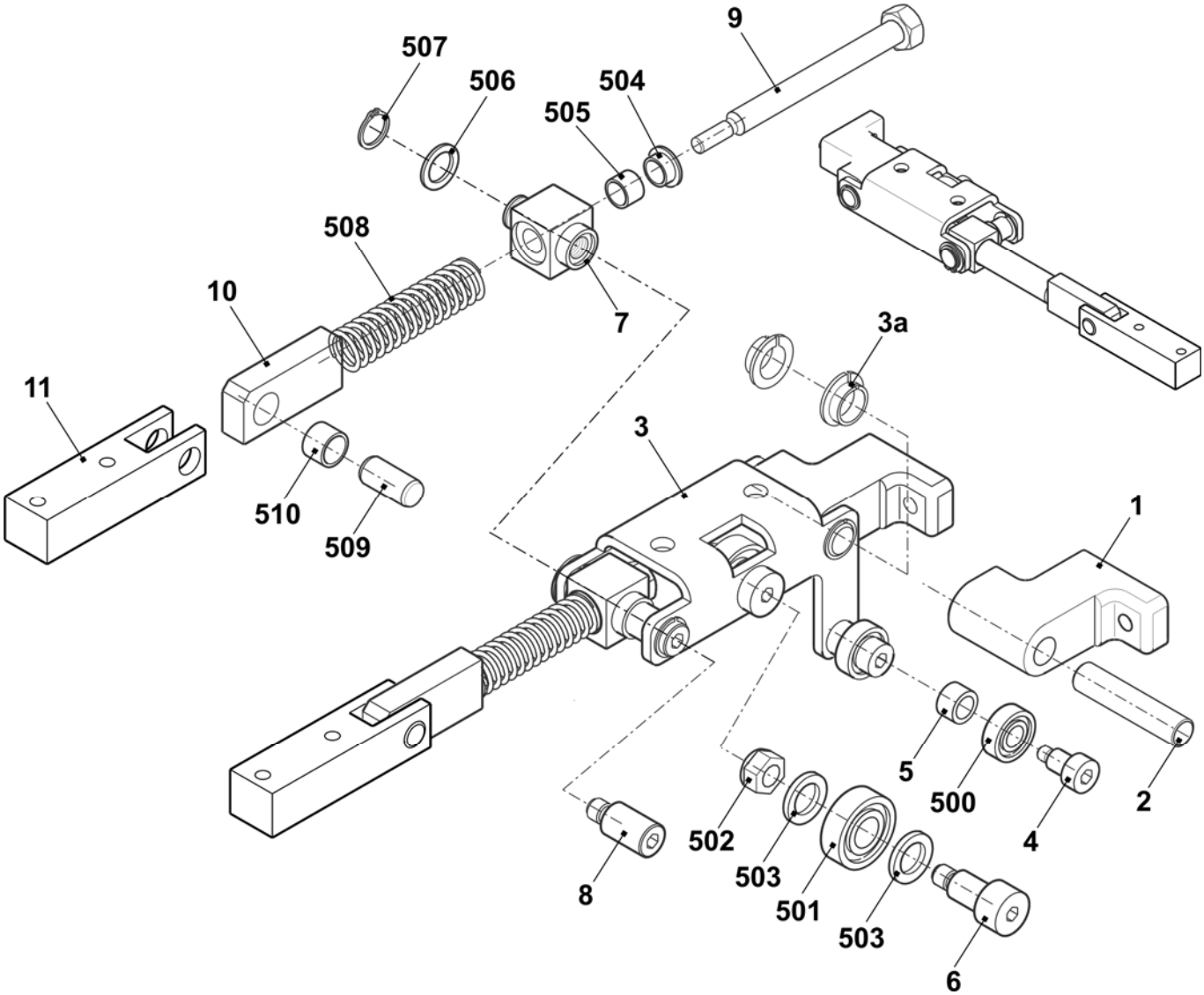

Auxiliary take-down

Auxiliary take-down

Pos	Designation	ID		Pos	Designation	ID
Σ	**Auxiliary take-down**					
1	Auxiliary take-down pre-assembled	254 974		2	Motor with 2 phases auxiliary take-down co.	235 602

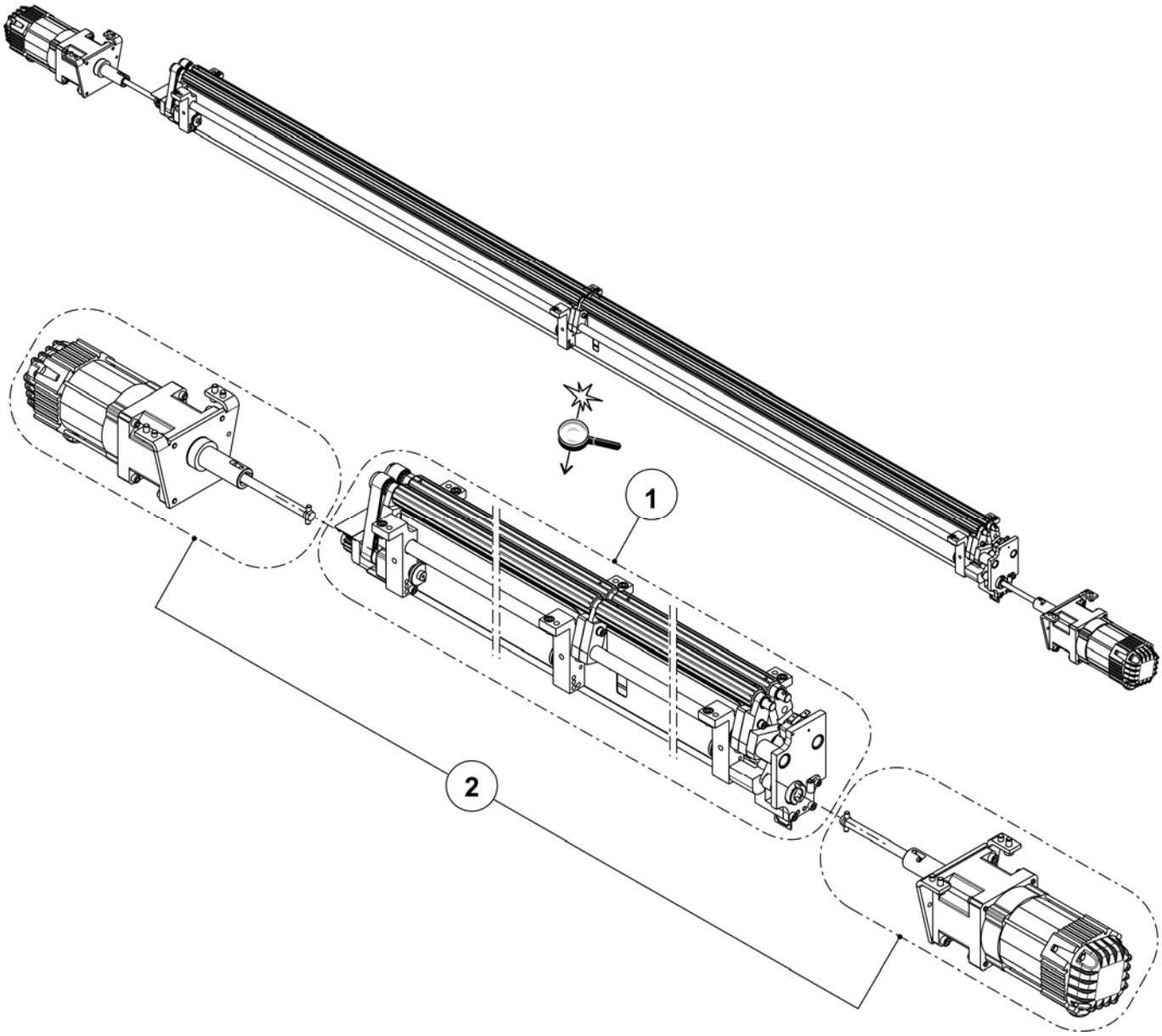

Auxiliary take-down pre-assembled

Pos	Designation	ID		Pos	Designation	ID
Σ	**Auxiliary take-down pre-assembled**	**254 974**				
6	Contact shaft	237 126		B	Take-down roller	237 128
7	Lever	235 164		L	Bearing on the left	236 894
8	Clamping lever	235 156		R	Bearing on the right	235 353
9	Eccentric	236 952		500	Cap screw M5x10	022 918
10	Distance pipe	235 189		502	Cap screw 6x10	235 448
11	Distance pipe	235 192		503	Stop disc GTM-1524-015	235 447
12	Cover plate	237 127		504	Disc 5	020 871
13	Roll	235 178		512	Dowel pin 6x10	023 268
24	Support	235 150		513	Slide bearing FSM-1517-20	237 060
A	Contact lever	235 356		900	Cap screw M6x12	020 134

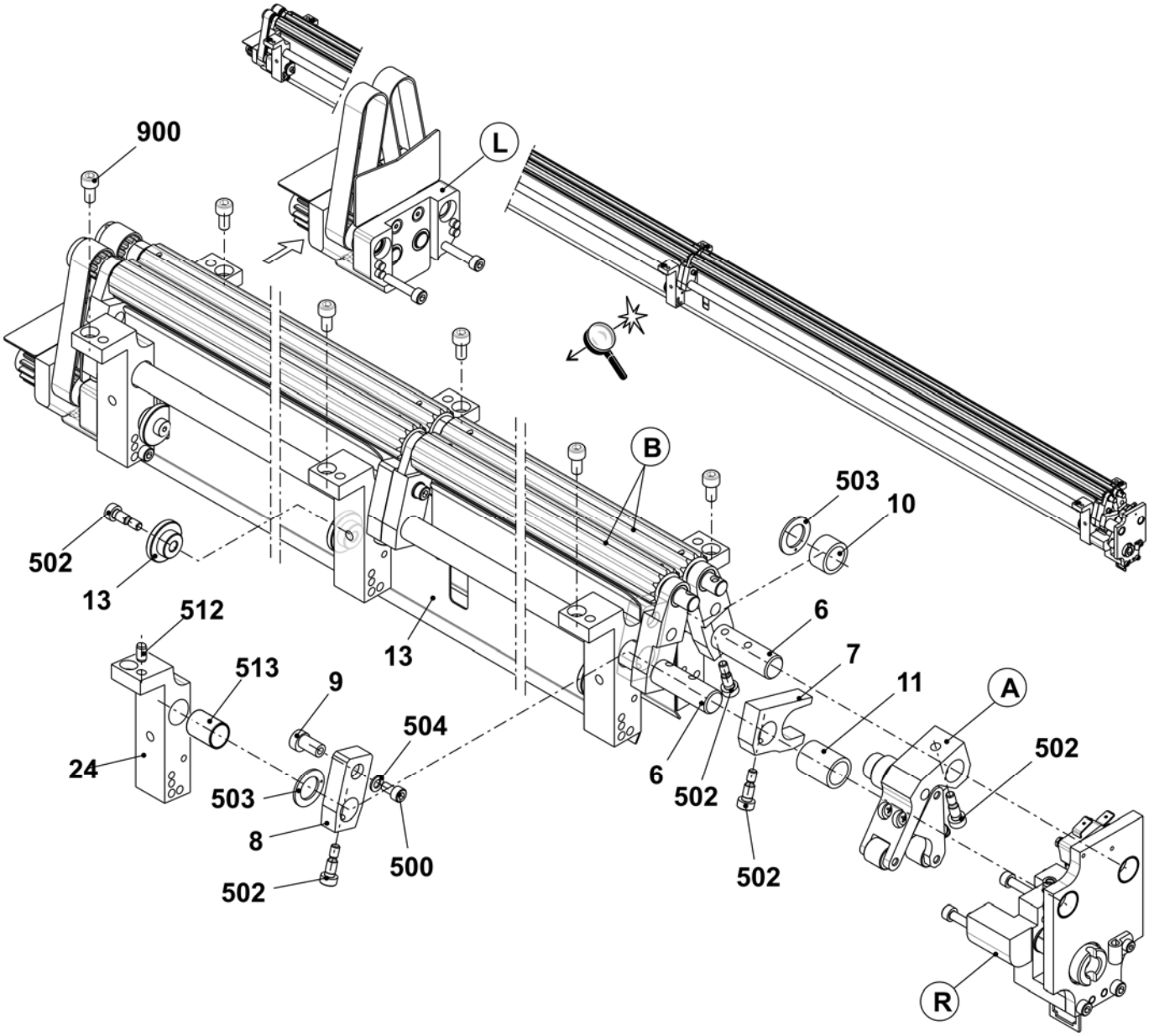

Contact lever

Pos	Designation	ID	Pos	Designation	ID
Σ	**Contact lever**	235 356	526	Slide bearing GFM-10x1216-06	023 280
33	Lever	235 172	527	Cap screw M10x16	023 748
34	Tilting lever	235 173	528	Countersunk screw M4x45	023 291
35	Roller	235 176	529	Hexagon nut M4-8	023 046
36	Roll	235 171	530	Dowel pin 5x22-A-ST	023 716
515	Compression spring 1.6x6.4x27.1	023 288	532	U-washer 4	020 870

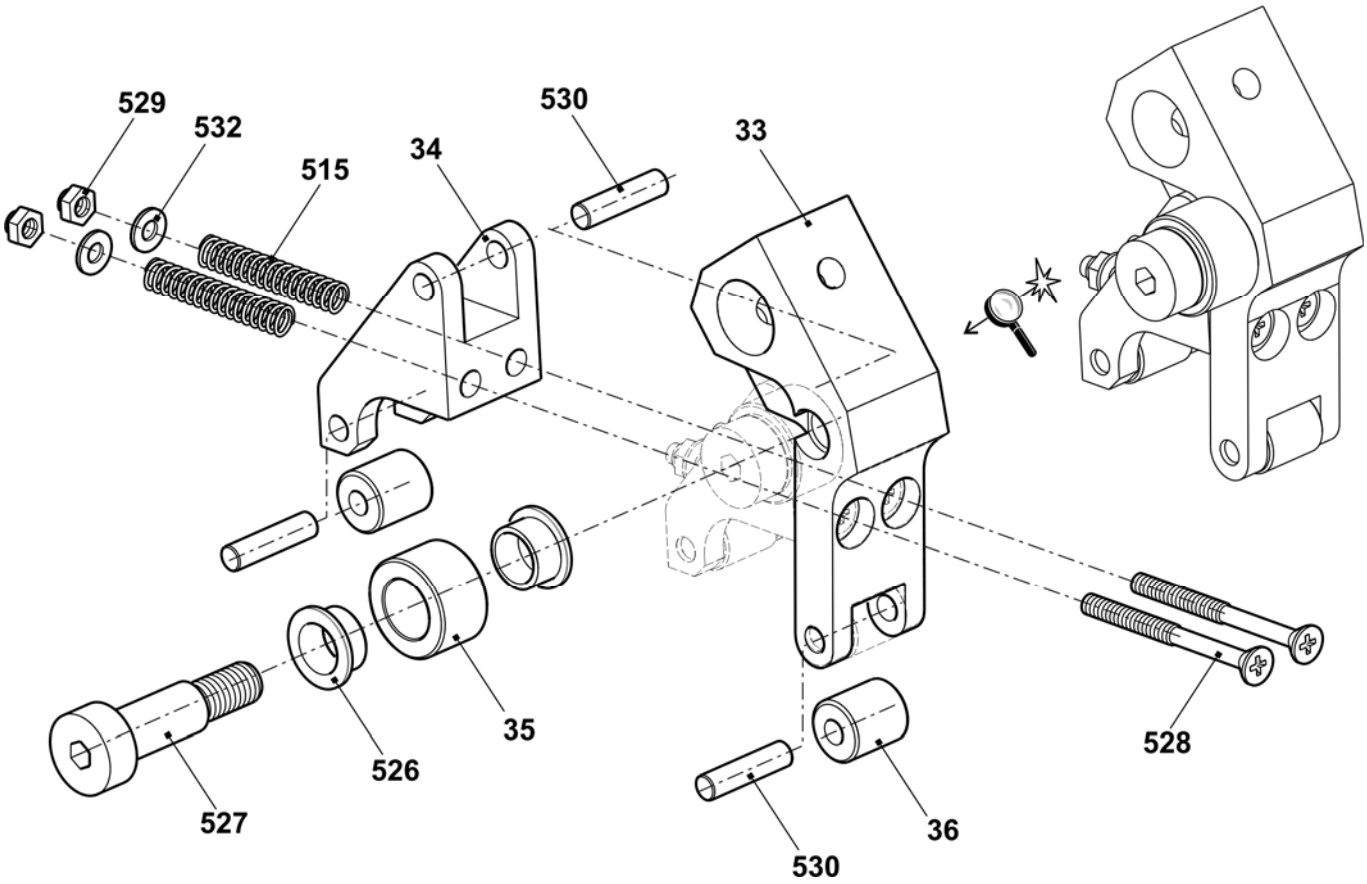

Take-down roller

Pos	Designation	ID		Pos	Designation	ID
Σ	**Take-down roller**	237 128				
22	Timing belt pulley	237 043			40a Needle roller bearing 10x14x12	023 665
37	Take-down roller	237 125		41	Lever bearing in the middle co.	235 359
39	Bolt	236 973		531	Slide bearing GFM-101214-07	023 627
40	Lever bearing on the right/left co.	235 358		510	Spring dowel sleeve 3x18	237 059

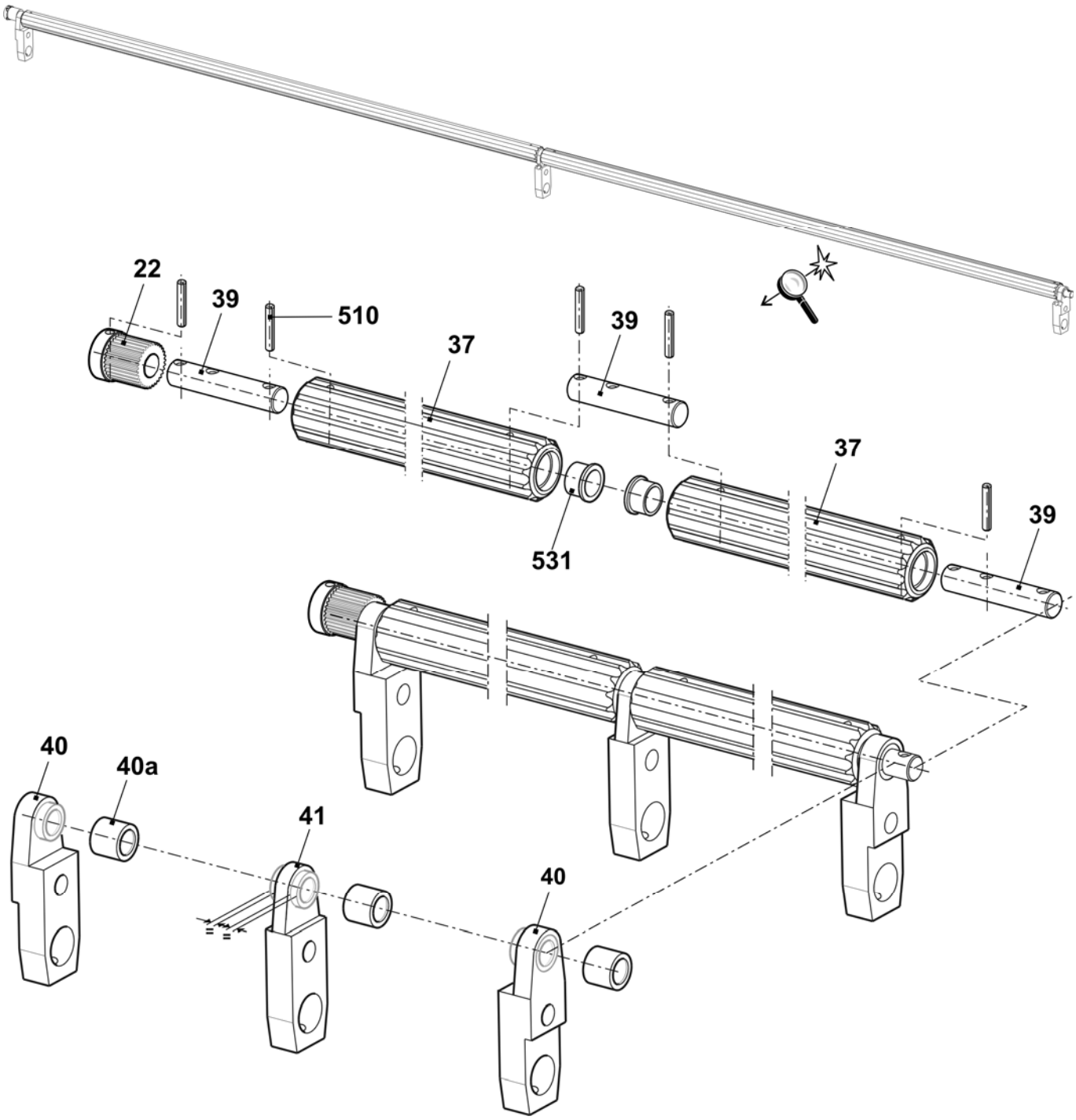

Left bearing of the auxiliary take-down

Pos	Designation	ID	Pos	Designation	ID
Σ	**Bearing on the left**	236 894	22	Timing belt pulley	237 043
14	Drive bearing	237 422	23	Toothed belt HPS5M NG CLEAN	237 118
15	Cover plate	236 970	505	Deep groove ball bearing 61900-2RS1	023 714
16	Cover plate	237 037	506	Needle roller bearing 10x14x10	023 664
17	Bolt	236 964	507	Cap screw M4x8	022 501
18	Bolt	236 963	508	Countersunk screw M4x12	023 062
19	Gear wheel	236 914	509	Locking ring 10x1	020 950
20	Gear wheel	236 916	510	Spring dowel sleeve 3x18	237 059
21	Gear wheel	236 917	900	Cap screw M5x35	022 879

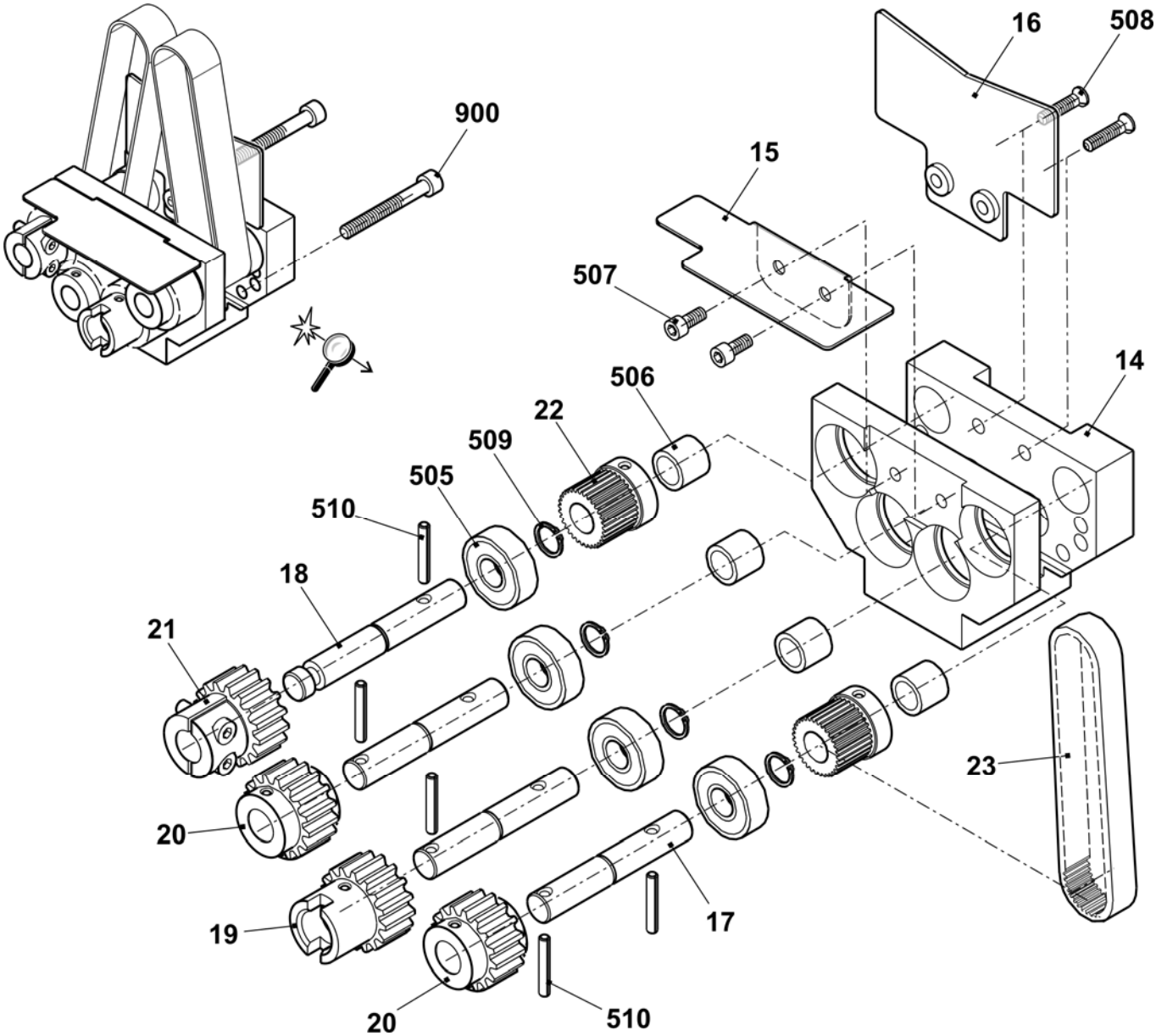

Right bearing of the auxiliary take-down

Pos	Designation	ID		Pos	Designation	ID
Σ	**Bearing on the right**	235 353				
25	Bearing on the right	237 520		514	Slide bearing GFM-101216-09	023 356
26	Plate	235 168		515	Compression spring 1.6x6.4x27.1	023 288
27	Microswitch	026 259		516	Slide bearing GFM-2427-07	023 712
28	Cable clip N-3B 5 mm	210 729		517	Hexagon screw M3x16	237 058
29	Cable switch HIAB ST468	235 027		519	Set screw M6x12	023 724
30	Sheet metal for plug	236 068		520	Cap screw M5x16	022 726
31	Shaft	235 159		521	Slide bearing GFM-1517-09	235 342
32	Eccentric	235 165		522	Feather key A 4x4x20	235 349
501	Pan-head screw M4x8	023 579		524	U-washer 3	020 877
507	Cap screw M4x8	022 501		900	Cap screw M5x35	022 879

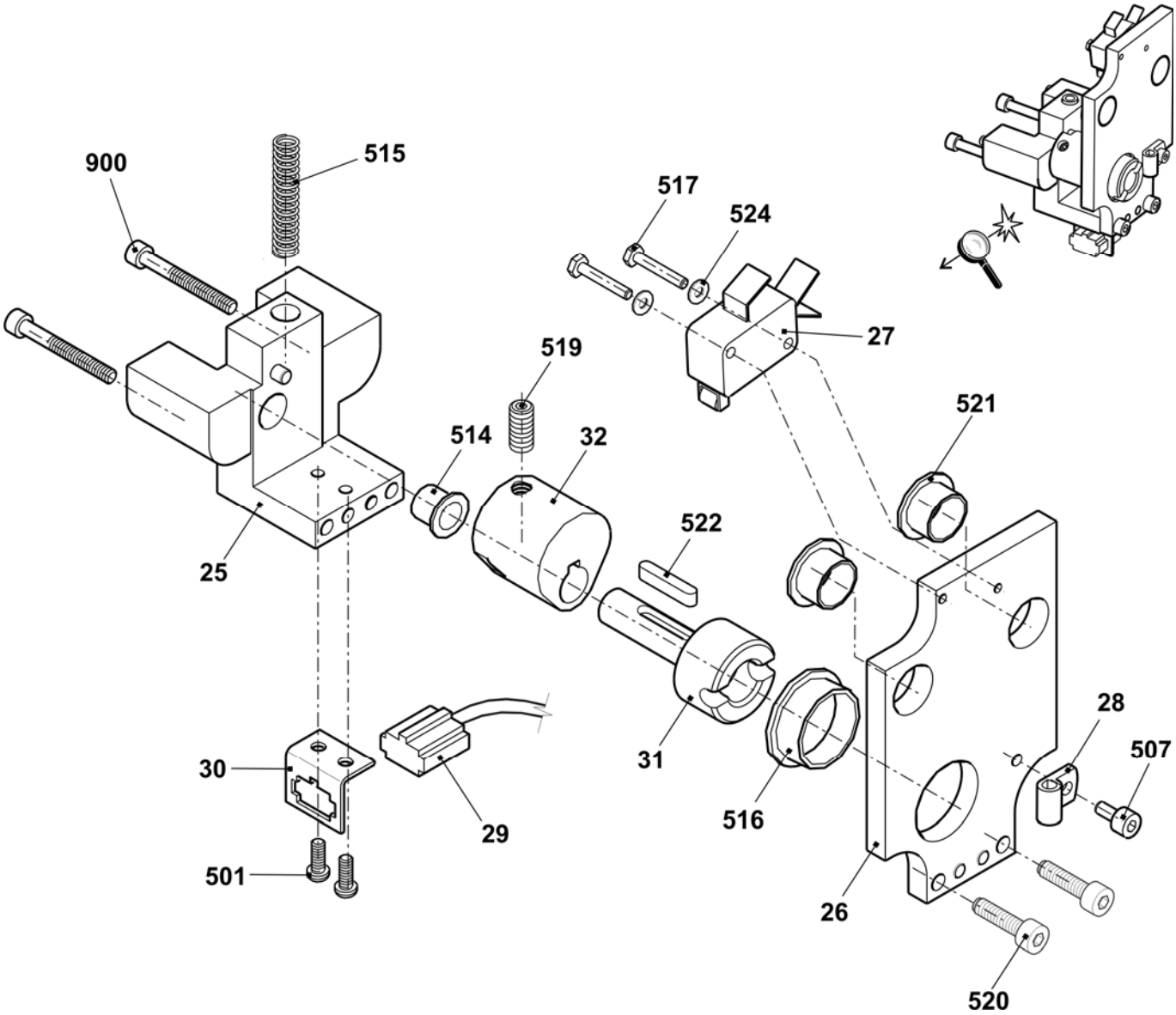

Motor

Pos	Designation	ID		Pos	Designation	ID
Σ	**Motor with 2 phases auxiliary take-down co.**	**235 602**				
1	Motor 1.8NM 30MIN-1	234 805		511	Set screw M6x10	023 543
2	Motor bracket	235 276		512	Cap screw M6x16	020 135
3	Drive sleeve	235 285		513	Compression spring 0.63x10.97x40	023 500
4	Shaft	235 300		514	Adjusting washer 6x12x1	023 444
510	Cap screw M6x12	020 134		515	Dowel pin 5x22-A-ST	023 716

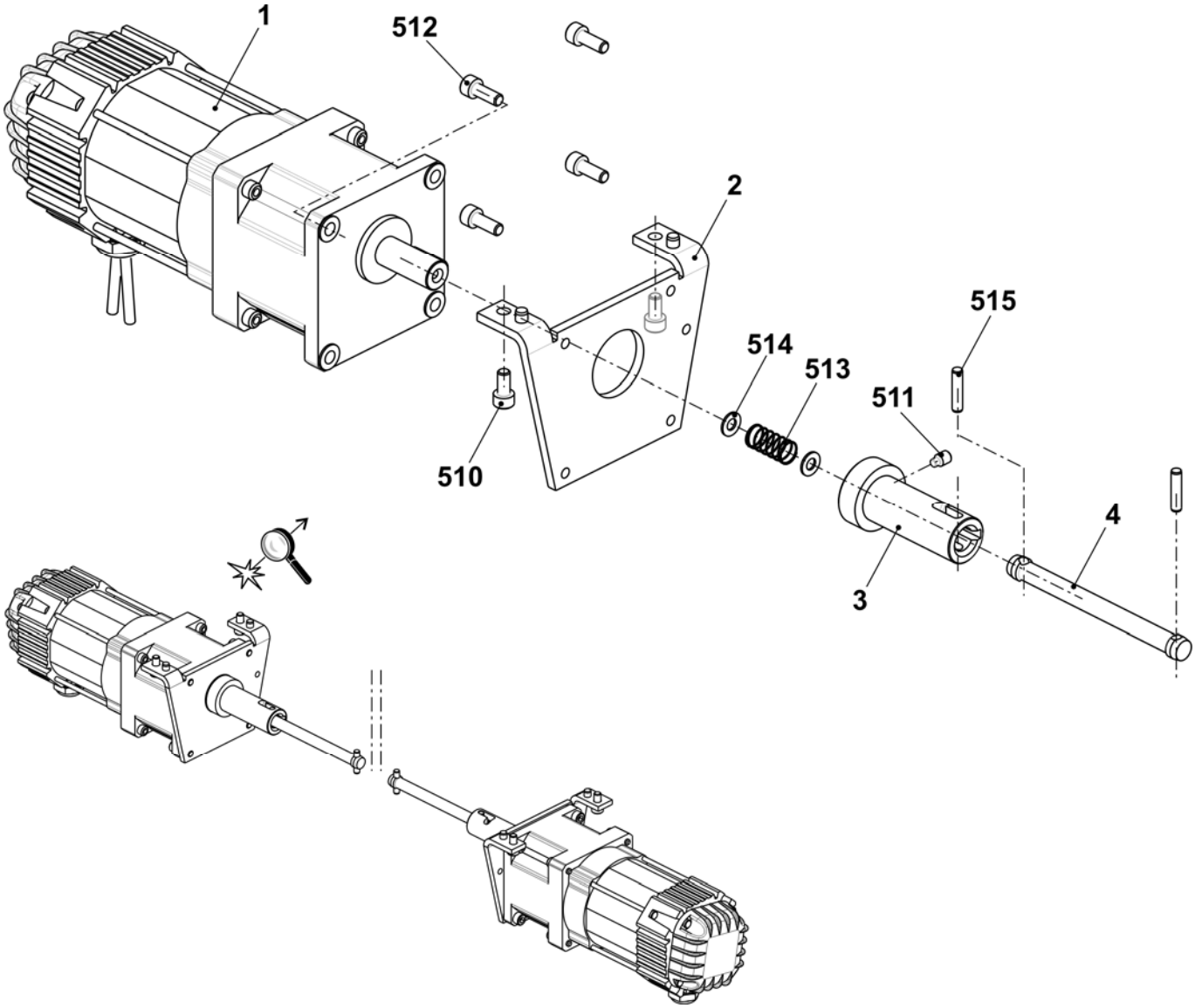

Comb take-down

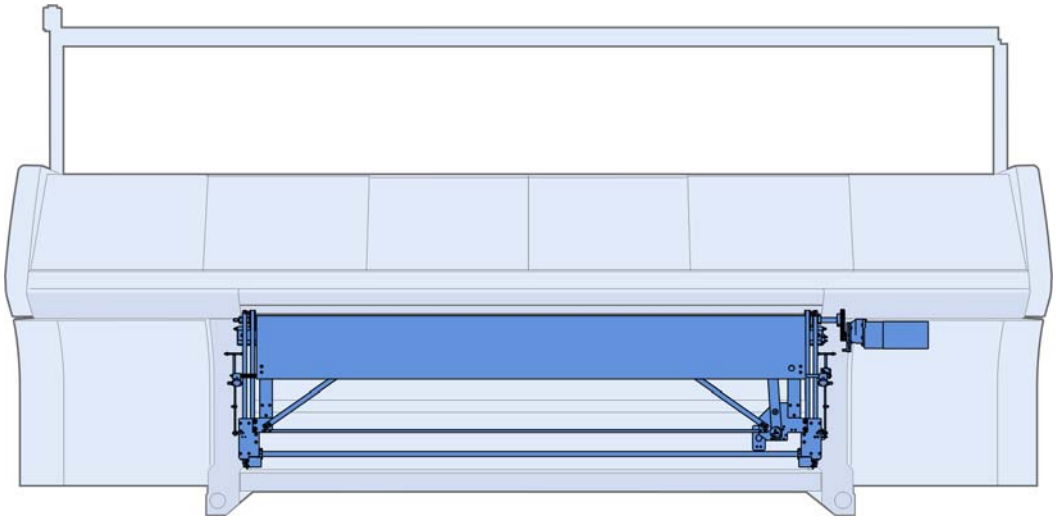

Comb take-down

Pos	Designation	ID		Pos	Designation	ID
Σ	**Comb take-down**			3	E8 + E8m.7	255 270
1	Comb take-down left	255 265			E10 + E10m.12 + E5.2	255 271
2	Comb take-down right	255 266			E12+ E6.2 + E6.2(12m.10)	255 248
3	Comb take-down in the middle				E14 + E7.2	255 272
	E5 + E5m.4 + E2,5.2	255 268			E16 + E8.2	255 273
	E7 + E7m.5 + E7m.8 + E3,5.2	255 269			E18	255 274

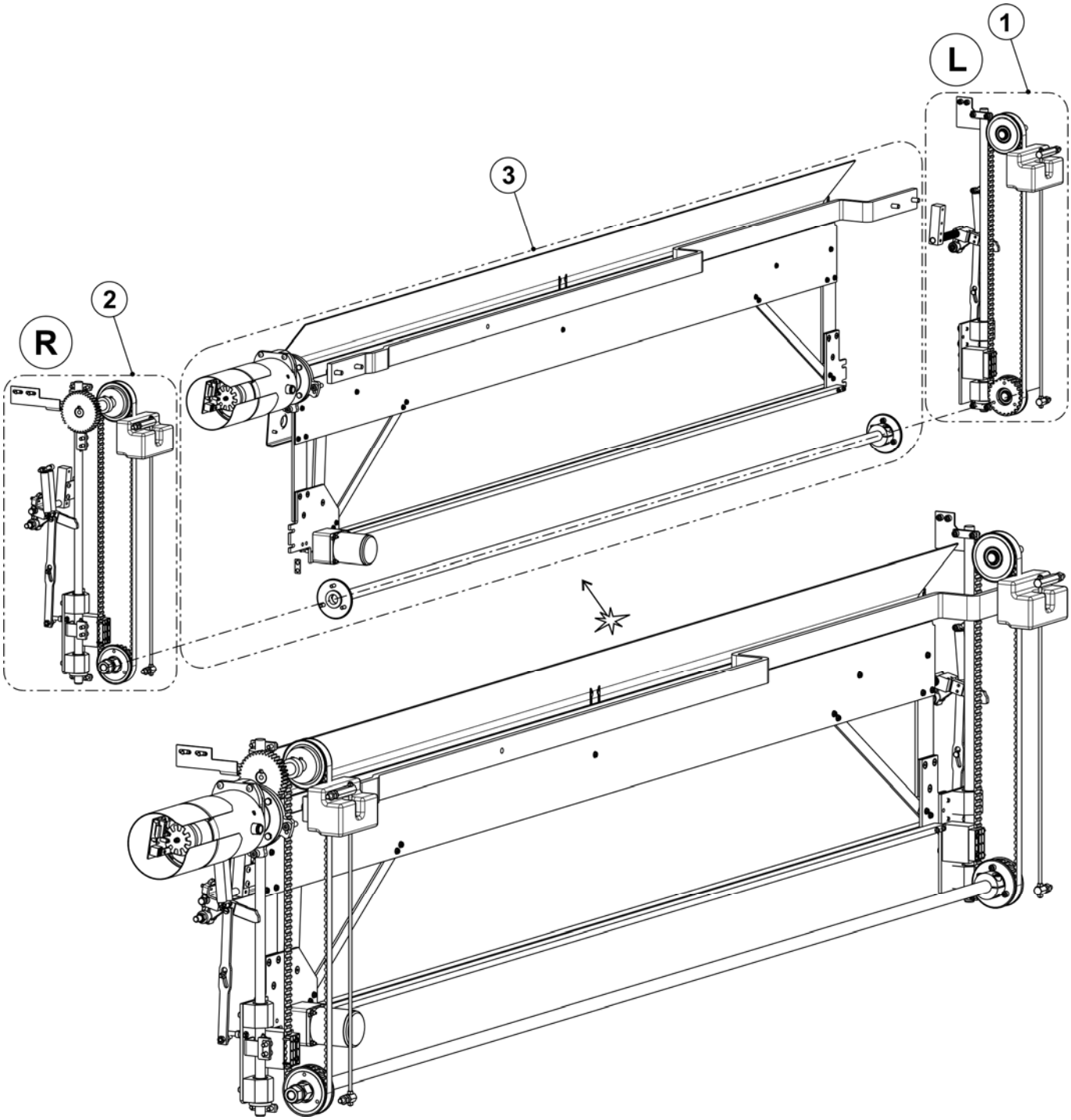

Comb take-down left

Pos	Designation	ID	Pos	Designation	ID
Σ	**Comb take-down left**	**255 265**			
1	Clamping part	209 379		528 Hexagon nut M8-6	020 838
2	Presser plate	241 967	34	Swivel lever on the left	252 859
3	Bolt	222 152	36	Clamping plate	227 159
5	Toothed belt 16T10/1300	240 065	500	Cap screw M6x16	020 135
6	Eccentric pin	222 320	507	Cap screw M6X65	240 162
11	Bolt	207 689	508	Cap screw M6x45	022 689
14	Timing belt pulley at the bottom co.	211 822	511	Hexagon nut M5-8	023 541
15	Timing belt pulley at the top co.	211 823	512	Hexagon nut M5-6	020 835
17	Stay bolt	222 315	513	Hexagon nut M6-6	020 836
18	Stay bolt	240 056	514	Hexagon nut M8-6	020 838
19	Threaded rod M5	240 057	515	Hexagon nut M16-6	020 845
25	Reflector co.	253 535	517	U-washer 16	020 876
26	Guide bar C35	206 560	524	Locking ring 17x1	023 299
27	Rubber buffer	206 561	530	Tension spring Din2097 15x1.50x70.94	251 614
28	Comb guide on the left	255 425	531	Cap screw M6x12	020 134
	28a Pulling pin	255 427	540*	Countersunk screw M5x10	023 247

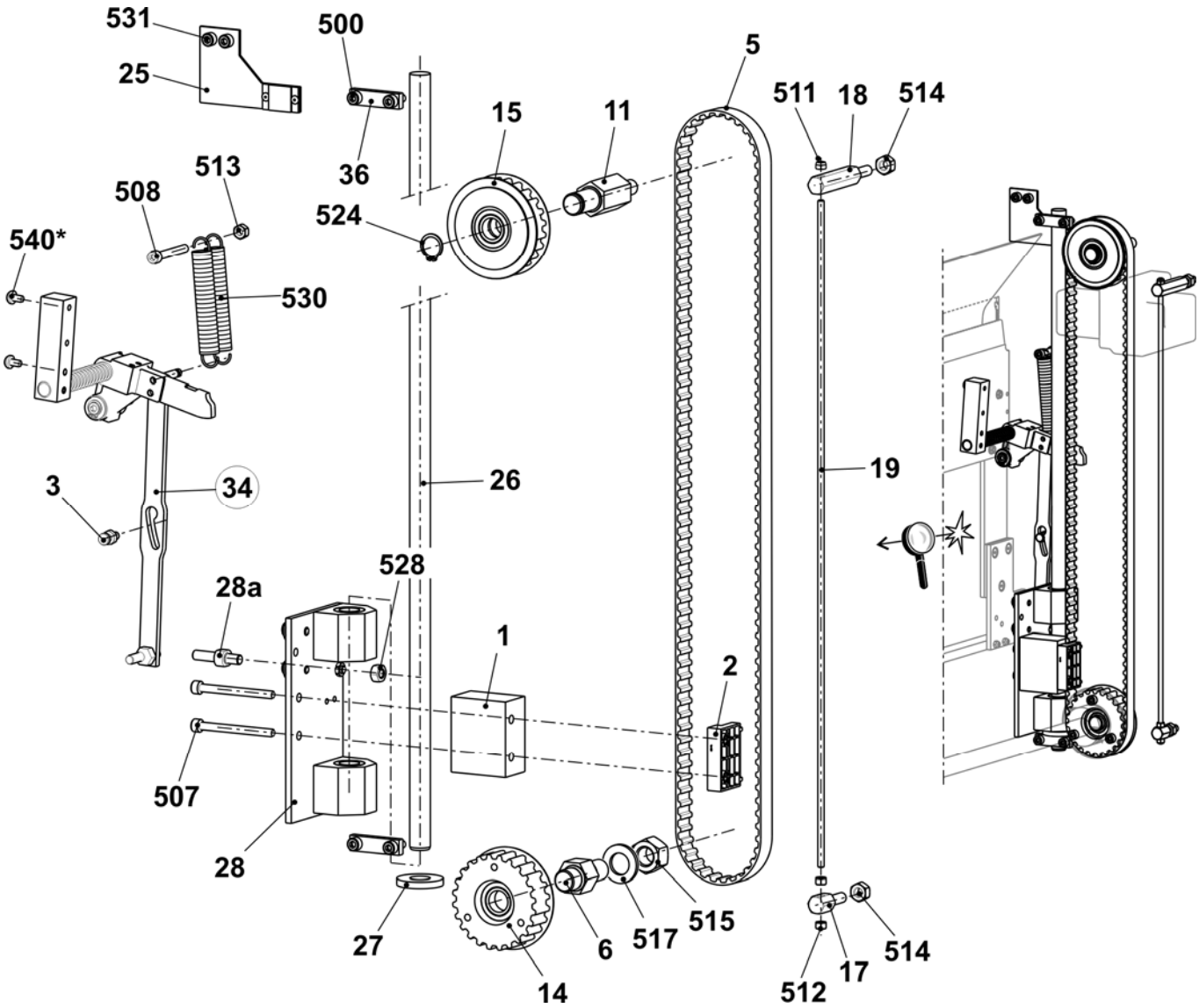

Comb take-down right

Pos	Designation		ID	Pos	Designation		ID
Σ	**Comb take-down right**		**255 266**				
1	Clamping part		209 379		529	Hexagon nut M8-6	020 838
2	Presser plate		241 967	33	Swivel lever on the right		252 858
3	Bolt		222 152	36	Clamping plate		227 159
5	Toothed belt 16T10/1300		240 065	500	Cap screw M6x16		020 135
6	Eccentric pin		222 320	507	Cap screw M6X65		240 162
12	Drive shaft comb co.		214 583	508	Cap screw M6x45		022 689
14	Timing belt pulley at the bottom co.		211 822	511	Hexagon nut M5-8		023 541
17	Stay bolt		222 315	512	Hexagon nut M5-6		020 835
18	Stay bolt		240 056	513	Hexagon nut M6-6		020 836
19	Threaded rod M5		240 057	514	Hexagon nut M8-6		020 838
22	Proximity switch inductive at the top		231 516	515	Hexagon nut M16-6		020 845
23	Proximity switch inductive at the bottom		231 520	517	U-washer 16		020 876
24	Photoelectric sensor co.		253 534	530	Tension spring 15x1.50x70.94		251 614
26	Guide bar C35		206 560	531	Cap screw M6x12		020 134
27	Rubber buffer		206 561	532	U-washer 6		020 872
29	Comb guide on the right		255 424	533*	Shim 0.2x12x27		023 735
	29a	Pulling pin	255 427	534*	Shim 0.5x12x27		023 736
	29b	Angle	240 112	540*	Countersunk screw M5x10		023 247

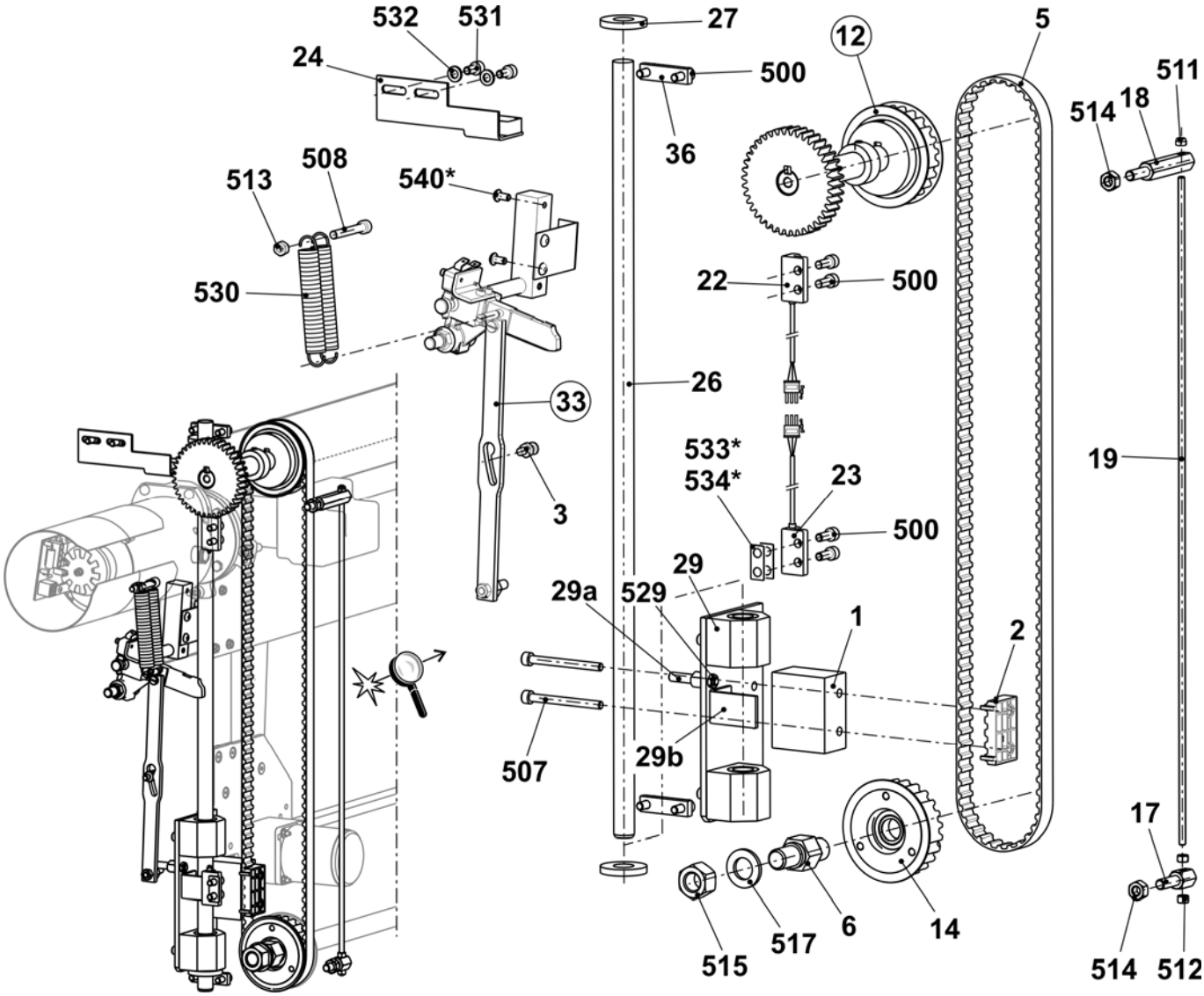

Drive shaft of comb

Pos	Designation	ID		Pos	Designation	ID
Σ	**Drive shaft of comb co.**	**214 583**				
1	Shaft	213 969		500	Feather key A 6x6x25	023 017
2	Gear wheel z=40, m=2	213 744		502	Set screw M6x8	022 684
	Always order pos. 502 additionally			503	Set screw M6x12	023 898
3	Timing belt pulley at the top	206 394		504	Set collar	020 938
	Always order pos. 503 additionally					

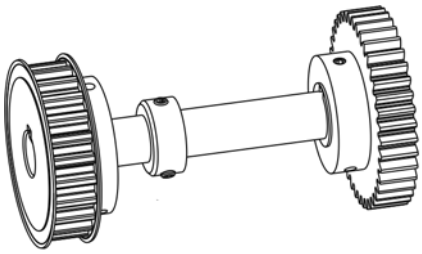

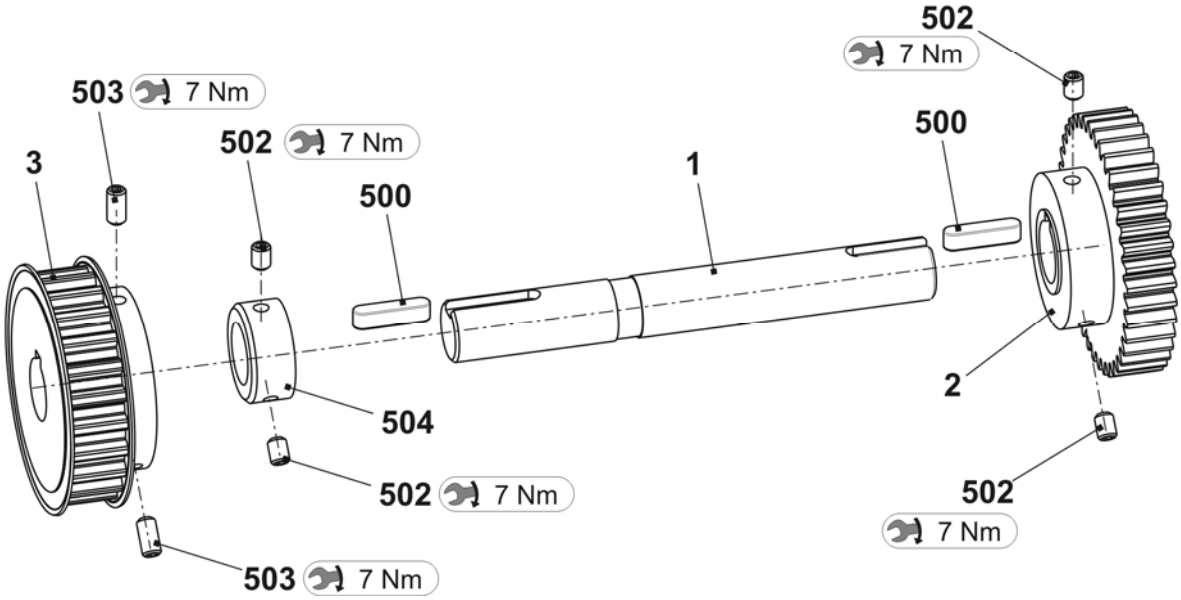

Swivel lever comb take-down

Pos	Designation	ID
Σ L	**Swivel lever on the left**	**252 859**
1	Support	252 780
2	Shaft	223 994
4	Plunger	251 099
5	Swivel lever	239 248
6	Bolt	214 053
7	Eccentric bolt	243 225
500	Compression spring 1.4x13.6x93	023 572
501	Spring dowel sleeve ISO8752-5x20	020 794
502	Dowel pin 5x22	023 716
504	Shoulder screw M5x29x35	251 618
505	Shoulder screw M5x5.8x6.2	023 365
507	U-washer 10	020 884
508	Locking ring	020 950
509	Shoulder screw M5x12x18	020 539
511	Hexagon nut M6-6	022 899

Pos	Designation	ID
Σ R	**Swivel lever on the right**	**252 858**
1	Support	252 780
2	Shaft	238 339
3	Microswitch	026 259
4	Plunger	251 099
5	Swivel lever	239 248
6	Bolt	214 053
7	Angle	224 009
8	Angle	238 304
9	Eccentric bolt	243 225
500	Countersunk screw M5x10	023 247
501	Spring dowel sleeve 5x20	020 794
502	Dowel pin 5x22	023 716
503	Spring dowel sleeve 5x12	020 793
504	Shoulder screw M5x29x35	251 618
505	Shoulder screw M5x5.8x6.2	023 365
506	Cap screw M4x8	022 501
507	U-washer 10	020 884
508	Locking ring 10x1	020 950
509	Shoulder screw M5x12x18	020 539
510	Cap screw M3x16	022 583
511	U-washer 3	020 877
513	Hexagon nut M6-6	022 899

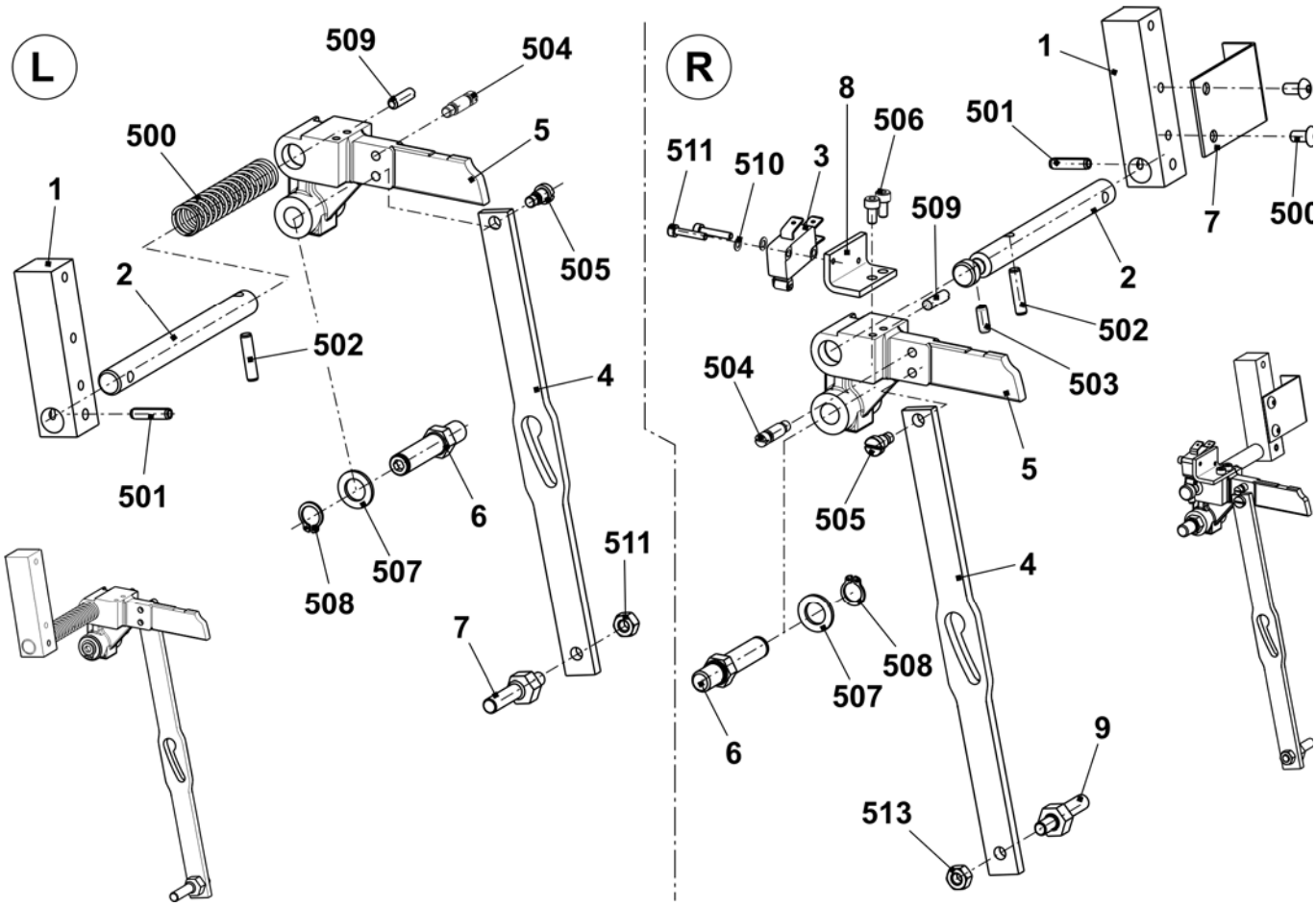

Comb take-down in the middle

Pos	Designation	ID	Pos	Designation	ID
Σ	**Comb take-down in the middle**		31	Comb unit	
	E5 + E5m.4 + E2,5.2	**253 586**		E5 + E5m.4 + E2,5.2	242 256
	E7 + E7m.5 + E7m.8 + E3,5.2	**253 587**		E7 + E7m.5 + E7m.8 + E3,5.2	242 257
	E8 + E8m.7	**253 588**		E8 + E8m.7	242 258
	E10 + E10m.12 + E5.2	**253 589**		E10 + E10m.12 + E5.2	242 259
	E12 + E6.2(12m.10) + E6.2	**253 522**		E12 + E6.2(12m.10) + E6.2	242 260
	E14 + E7.2 + E14/12	**253 590**		E14 + E7.2	242 261
	E16 + E8.2 mg	**253 591**		E16 + E8.2 mg	242 262
	E18	**253 592**		E18	242 263
8	Flange	207 695	32	Motor take-down unit co.	253 803
9	Shaft long	236 875		32a Motor take-down unit + comb	214 279
500	Cap screw M6x16	020 135		32b Flange	241 754
501	Countersunk screw M5x10	023 247		532 Hexagon screw M6x16	020 356
502	Cap screw M8X25	020 142	35	Guide plate	252 830
525	Serrated lock washer J5.3	022 489			

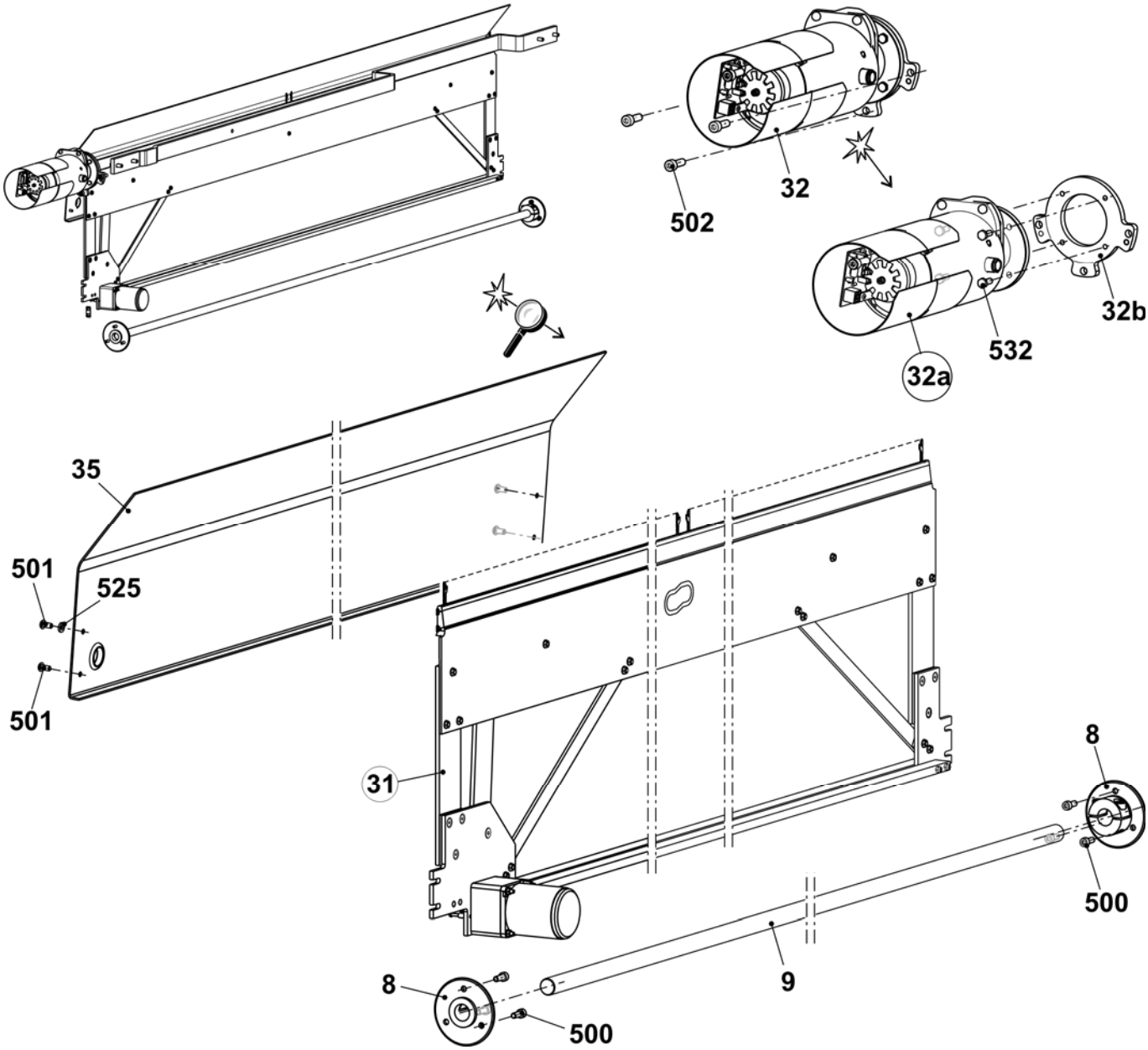

Comb unit

Pos	Designation	ID
Σ	**Comb unit**	
	E5 + E5m.4 + E2,5.2	**242 256**
	E7 + E7m.5 + E7m.8 + E3,5.2	**242 257**
	E8 + E8m.7	**242 258**
	E10 + E10m.12 + E5.2	**242 259**
	E12 + E6.2(12m.10) + E6.2	**242 260**
	E14 + E7.2	**242 261**
	E16 + E8.2 mg	**242 262**
	E18	**242 263**
1	Hook bed	
	E5 + E5m.4 + E2,5.2	237 468
	E7 + E7m.5 + E7m.8 + E3,5.2	237 469
	E8 + E8m.7	237 694
	E10 + E10m.12 + E5.2	237 470
	E12 + E6.2(12m.10) + E6.2	237 471
	E14 + E7.2	237 472
	E16 + E8.2 mg	237 695
	E18	237 473
2	Closer	
	E5 + E5m.4 + E2,5.2	230 105
	E7 + E7m.5 + E7m.8 + E3,5.2	230 105
	E8 + E8m.7	230 105
	E10 + E10m.12 + E5.2	230 106
	E12 + E6.2(12m.10) + E6.2	230 106
	E14 + E7.2	230 106
	E16 + E8.2 mg	230 107
	E18	230 107
3	Body	
	E5 + E5m.4 + E2,5.2	230 093
	E7 + E7m.5 + E7m.8 + E3,5.2	230 093
	E8 + E8m.7	230 093
	E10 + E10m.12 + E5.2	230 094

Pos	Designation	ID
3	Body	
	E12 + E6.2(12m.10) + E6.2	230 094
	E14 + E7.2	230 094
	E16 + E8.2 mg	230 095
	E18	230 095
4	Cover rail	237 065
5	Hook slider	
	E5 + E5m.4 + E2,5.2	237 463
	E7 + E7m.5 + E7m.8 + E3,5.2	237 464
	E8 + E8m.7	237 466
	E10 + E10m.12 + E5.2	237 465
	E12 + E6.2(12m.10) + E6.2	237 466
	E14 + E7.2	237 464
	E16 + E8.2 mg	237 466
	E18	237 467
6	Strut	218 740
7	Collar bolt co.	211 036
8	Cross slider	237 069
9	Cover rail	237 074
10	Plunger	205 678
11	Switch lever co.	240 060
12	Intermediate plate	218 742
13	Stabilizator	237 056
500	Cap screw M4x50	023 102
502	Countersunk head screw M5x12	023 340
504	Hexagon nut M4-8	023 046
505	Hexagon nut M5-04	020 854
508	U-washer 5-200	020 871
510	Cap screw M4x30	023 290
511	Circlip	022 774
512	Countersunk screw M5x16	023 417

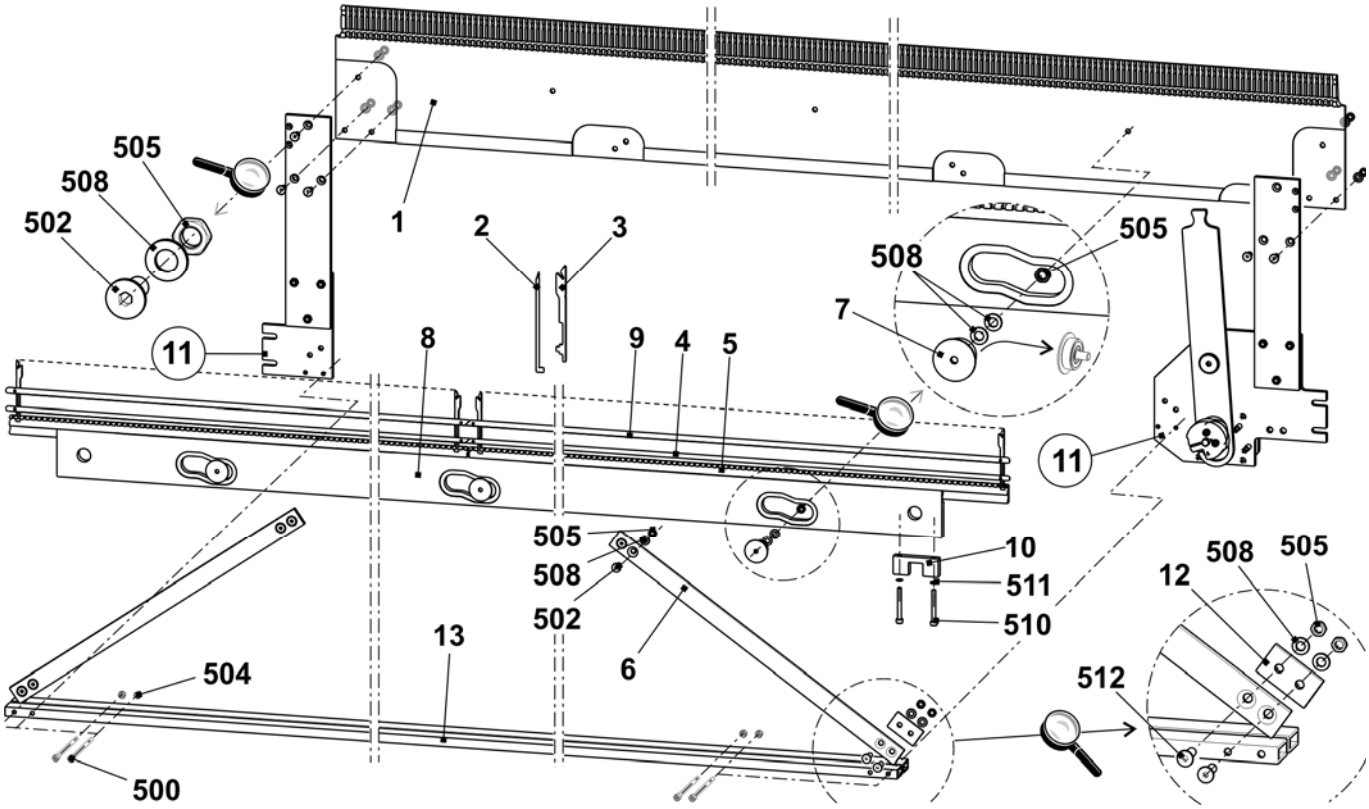

Switch lever comb take-down

Pos	Designation	ID		Pos	Designation	ID
Σ	**Switch lever co.**	**240 060**		500	Cap screw M3x25	023 093
1	Screwing plate on the right	240 058		501	Cap screw M4x20	023 171
2	Screwing plate on the left	240 059		502	Cap screw M4x16	023 123
3	Lever	215 228		504	Countersunk screw M6x12	023 435
4	Bearing bolt	215 675		505	Countersunk screw M5x16	023 417
5	Eccentric	205 681		506	Shim ring 16x22x2	023 449
6	Tension lifter	215 287		507	Adjusting washer 10x16x1	023 260
13	Intermediate plate	213 980		510	Hexagon nut M5	020 854
14	Retaining plate	218 977		511	Collar bearing 10x16x22	022 841
15	Motor comb hook 2 phases	244 635		515	Spacer	210 488

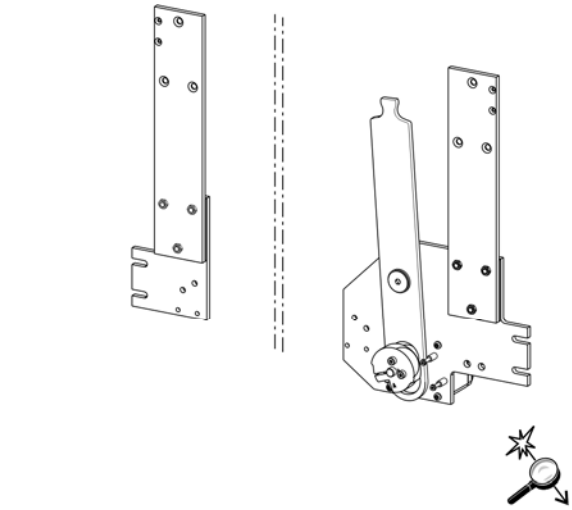

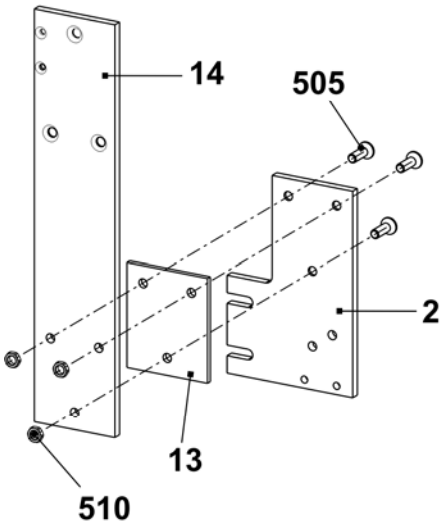

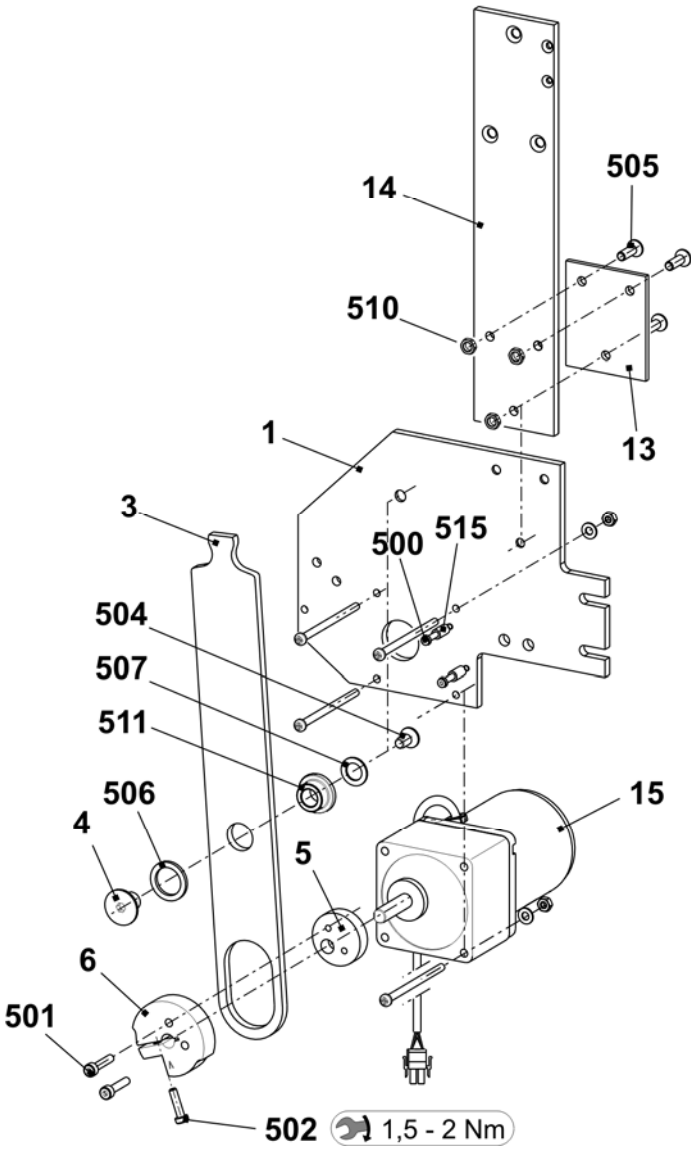

Motor take-down unit

Pos	Designation	ID	Pos	Designation	ID
Σ	**Motor take-down unit**	**214 279**	500	Cap screw M4x8	022 501
2	Impulse disc	208 716	504	U-washer 4	020 879
3	Photoelectric sensor take-down + comb	300 744	506	Circlip	022 774
4	Cover	212 262	507	Shim ring 4x8x1	023 369

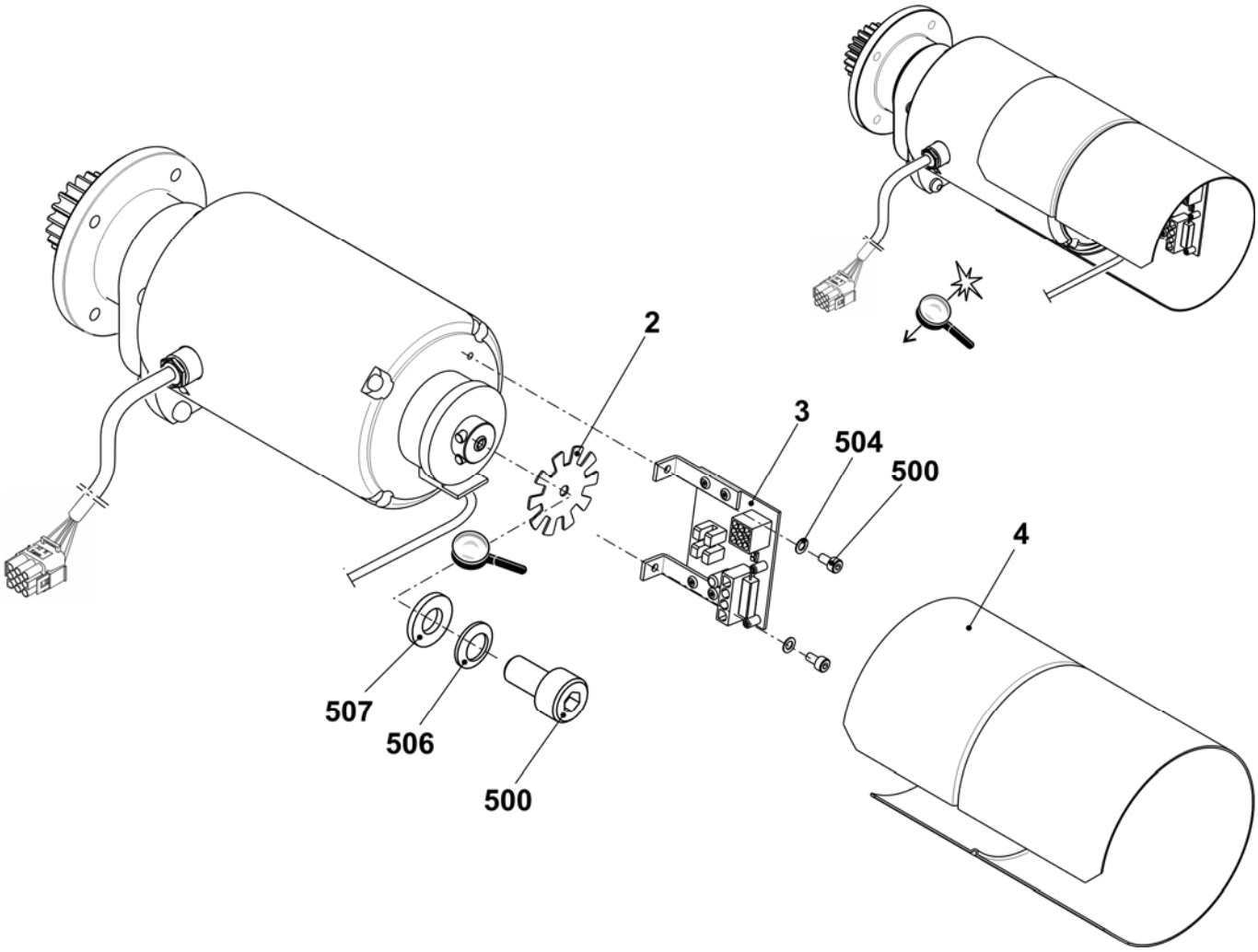

Yarn delivery device

Yarn guide system from 20 up to 26 FKE

Pos	Designation	ID	Pos	Designation	ID
Σ	**Yarn guide system 20 FKE 84''**	**240 685**			
	Yarn guide system 26 FKE 84''	**242 269**	8	Yarn guide bracket co.	241 581
1	Support 84“	243 112	9	Sliding block	228 851
2	Yarn control device (FKE)	237 124	500	Serrated lock washer	023 388
3	Connection cable FKE-3 84”	240 349	501	Self-locking screw M6x12	023 415
4	Yarn guide bar	236 932	502	Screw M6x20	023 721
5	Support on the right	243 601	503	Ribbed safety nut M6-10	023 414
6	Support on the left	243 600	505	U-washer 6-200	022 431
7	Support	243 792	506	Pan-head screw M8x16	023 113

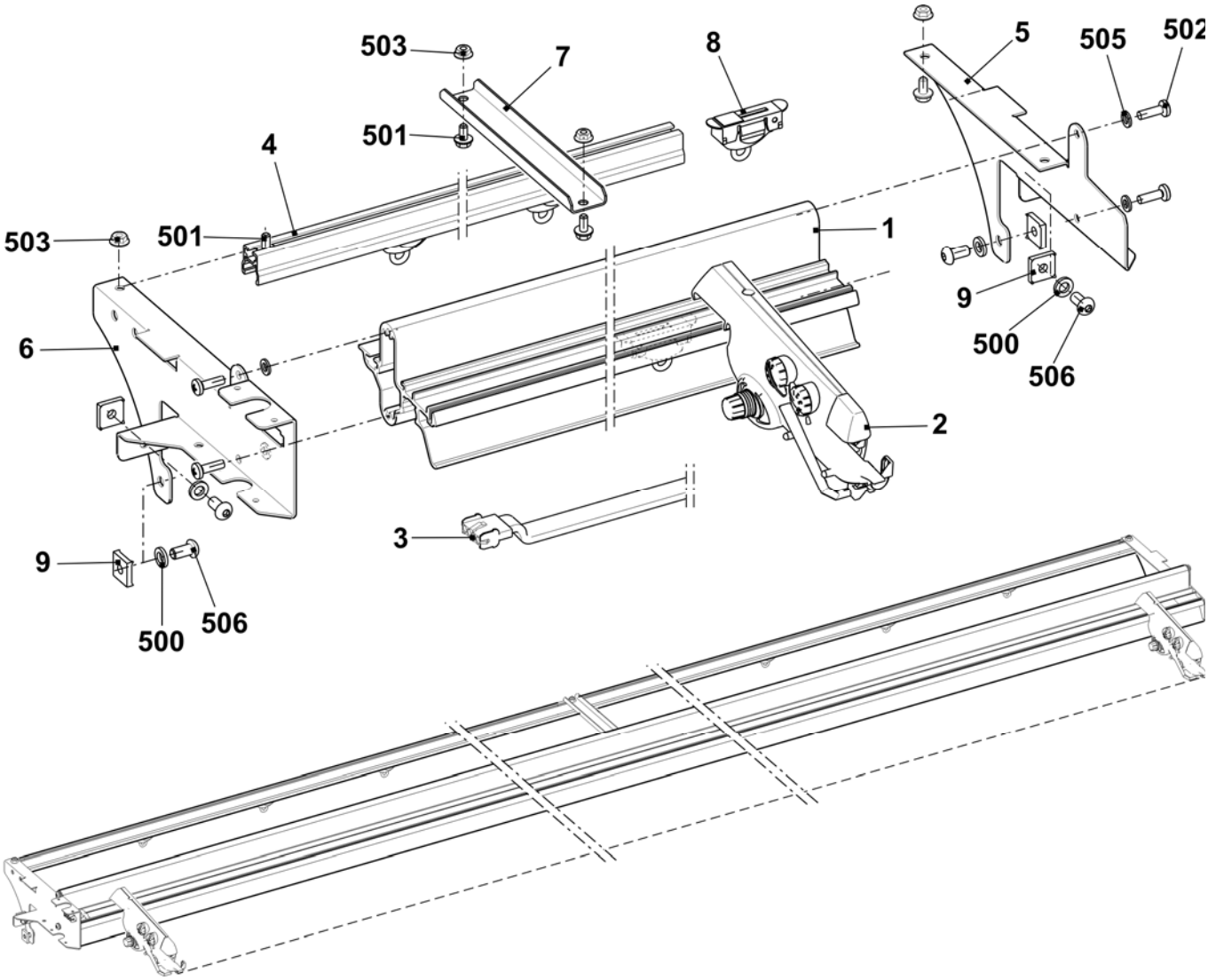

Yarn guide system with 32 FKE

Pos	Designation	ID		Pos	Designation	ID
Σ	**Yarn guide system 32 FKE 84''**	**242 991**				
1	Support	243 112		13	Support on the left	243 602
2	Yarn control device (FKE)	237 124		14	Support on the right	243 603
3	Connection cable FKE-3 84"	240 349		500	Serrated lock washer	023 388
4	Yarn guide bar	236 932		501	Self-locking screw M6x12	023 415
5	Support on the right	243 601		502	Screw M6x20	023 721
6	Support on the left	243 600		503	Ribbed safety nut M6-10	023 414
7	Support	239 295		505	U-washer 6	022 431
8	Yarn guide bracket co.	241 581		506	Countersunk screw M8x16	023 113
9	Sliding block	228 851		507	Square nut M8	023 269

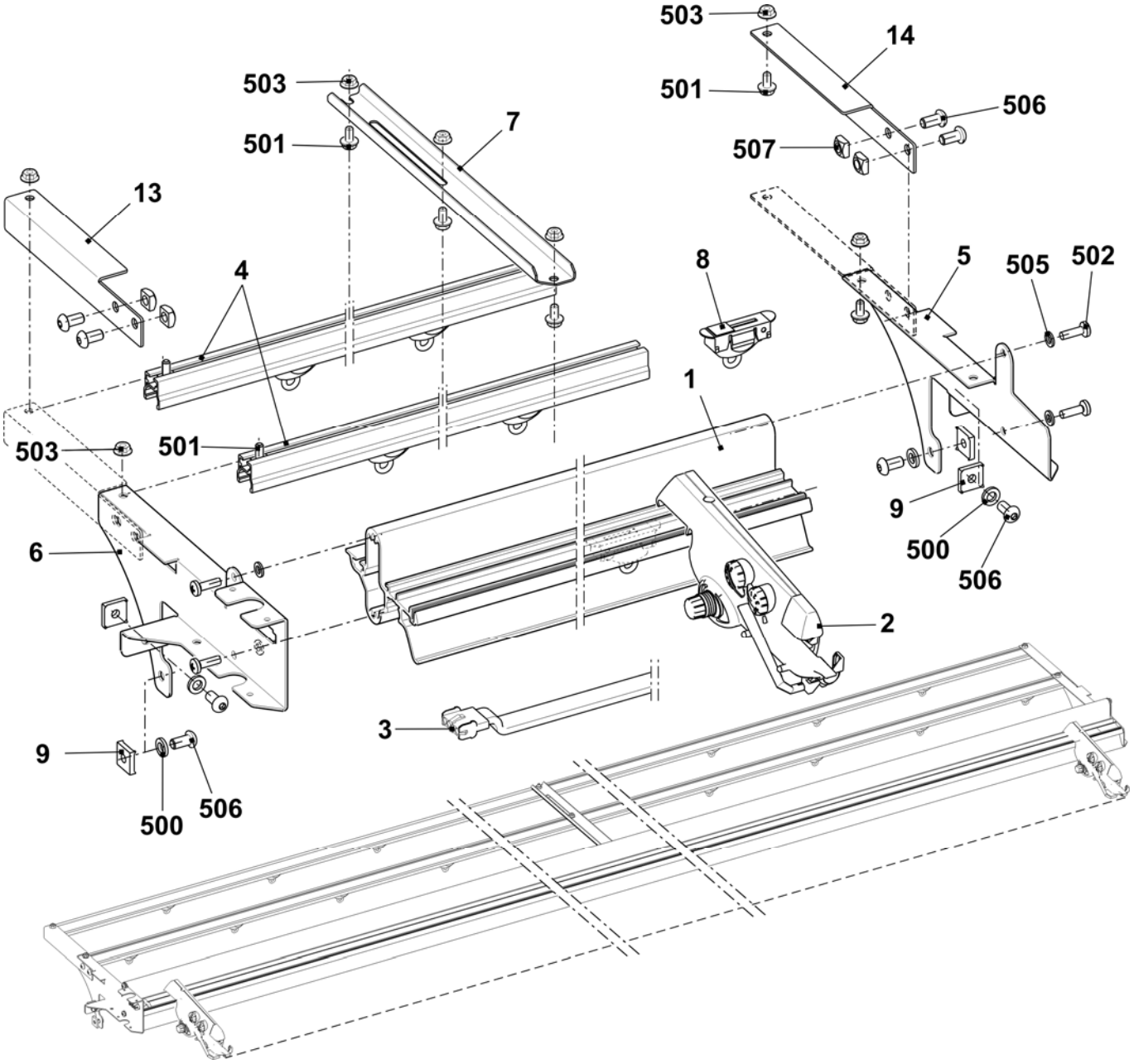

Yarn control unit

Pos	Designation	ID		Pos	Designation	ID
Σ	**Yarn control unit**	**237 124**				
1	Lamp cap	251 166		13	Tension spring	253 040
2	Rotary knob	251 167		14	Tension spring	253 041
3	Knot sensor big	251 168		15	Ceramic eyelet open	240 733
4	Knot sensor little	251 169		16	Turn off bow	253 043
5	Screw	251 170		17	Printed board	253 046
6	Yarn brake disk	216 365		18	Connector pin	253 047
7	Yarn holder	244 407		19	Connector pin	253 048
8	Sleeve	253 034		20	Connector pin	253 049
9	Compression spring	253 035		21	Connector pin	253 050
10	Pin	253 036		22	Compression spring	253 055
11	Trip cam	253 037		23	Rotary knob	253 056
12	Tension spring	253 038		24	Disc	253 057

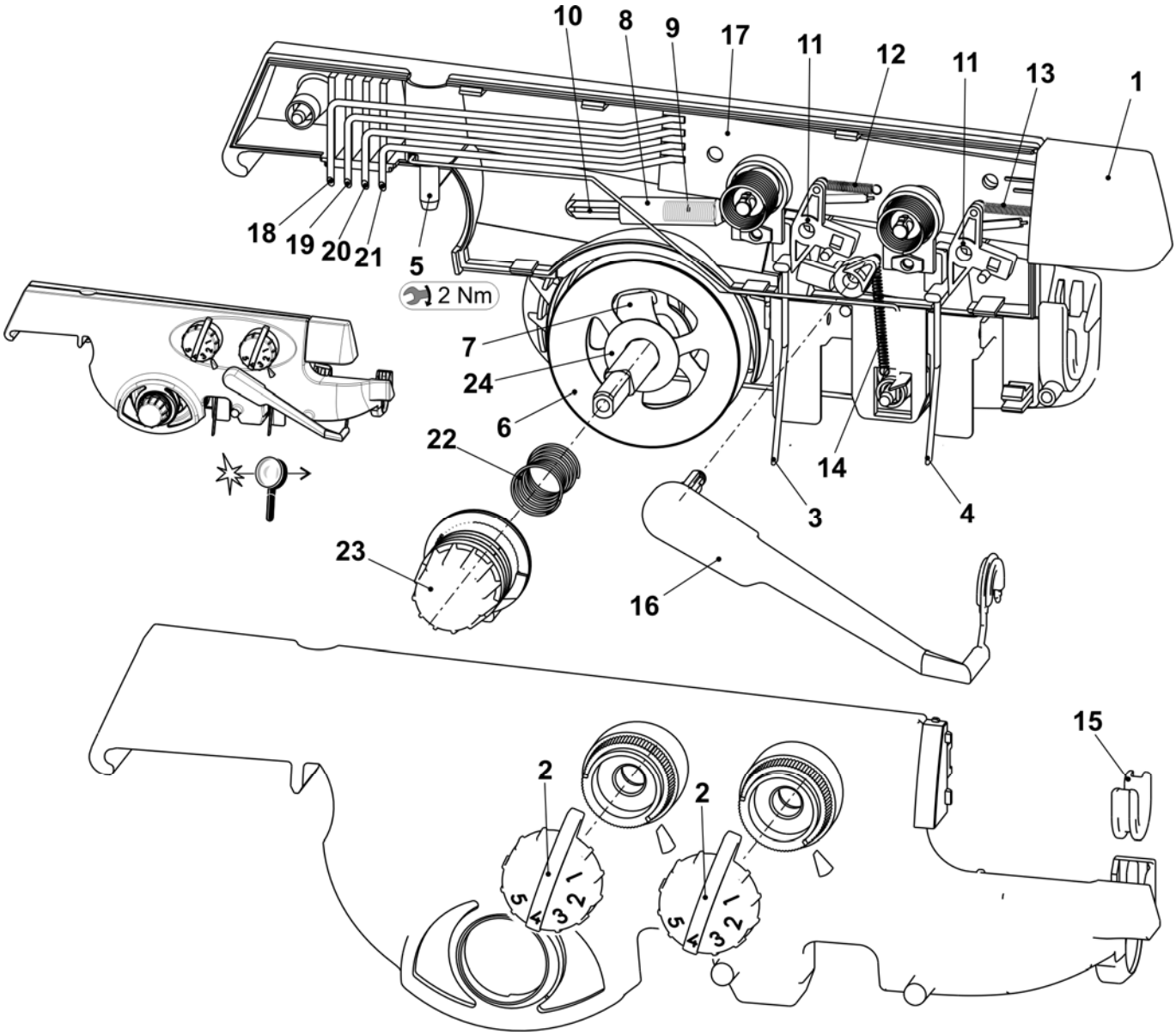

Left yarn guide

Pos	Designation	ID	Pos	Designation	ID
Σ	**Safety cover on the left co.**		9	Wire bow on the left	241 370
	E3 + E5 + E2,5.2 + E3,5.2 + E5.2 + E5m.4 + E7m.5	**241 271**	10	Yarn deflector	242 011
	E7 + E8 + E6.2 + E7m.8 + E8m.7	**241 272**	11	Connection cable yarn tensioner OKC	240 808
	E10 + E12 + E14 + E16 + E18 + E7.2 + E8.2 + E9.2 + 10m.12 + E6.2(12m.10) + E14/12	**241 273**	13	Yarn brake not adjustable	244 356
5	Yarn brake co.	244 347	14	Clamping bow	244 409
6	Shaft	241 318	15	Ground cable	244 404
7	Yarn tensioner on the left co.		501	Ceramic eyelet	240 640
	E3 + E5 + E2,5.2 + E3,5.2 + E5.2 + E5m.4 + E7m.5	241 363	502	Compression spring 0.90x5.40x13.60	241 360
	E7 + E8 + E6.2 + E7m.8 + E8m.7	241 364	504	U-washer 6	022 537
	E10 + E12 + E14 + E16 + E18 + E7.2 + E8.2 + E9.2 + 10m.12 + E6.2(12m.10) + E14/12	241 365	510	Screw KB 60x20	237 682
8	Cover	240 783	512	Flat connector 2x45 M6	243 117

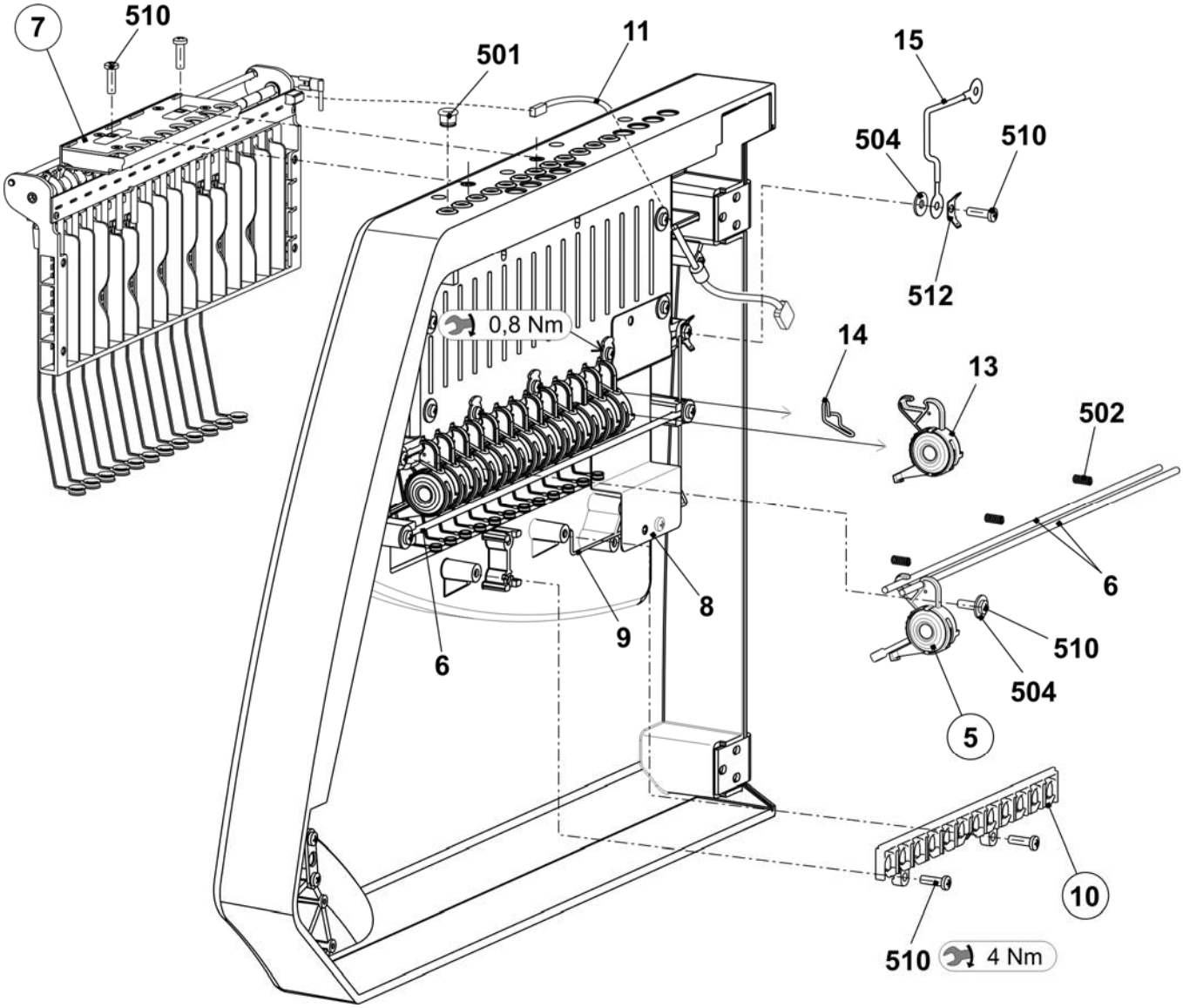

Left yarn tensioner

Pos	Designation	ID	Pos	Designation	ID
Σ	**Yarn tensioner on the left co.**		6	Cover	242 268
	E3 + E5 + E2,5.2 + E3,5.2 + E5.2 + E5m.4 + E7m.5	**241 363**	7	Spacer	242 048
	E7 + E8 + E6.2 + E7m.8 + E8m.7	**241 364**	8	Grounding sheet metal of tension axle	243 121
	E10 + E12 + E14 + E16 + E18 + E7.2 + E8.2 + E9.2 + 10m.12 + E6.2(12m.10) + E14/12	**241 365**	9	Ground cable yarn tensioner OKC	243 105
1	Card yarn tensioner 16-fold on the left	241 345	500	Screw KB 30x8	236 228
2	Tension axle on the left co.		501	Circlip	021 022
	E3 + E5 + E7 + E8 + E2,5.2 + E3,5.2 + E5.2 + E6.2 + E5m.4 + E7m.5 + E7m.8 + E8m.7	241 366	502	Tension spring 5.05x0.55x53 E3-5 (E2,5.2 + E3,5.2 + E5.2 + E5m.4 + E7m.5)	023 502
	E10 + E12 + E14 + E16 + E18 + E7.2 + E8.2 + E9.2 + 10m.12 + E6.2(12m.10) + E14/12	241 381		Tension spring 4.9x0.5x53 E7 + E8 + E6.2 + E7m.8 + E 8m.7	023 503
3	Housing	241 367		Tension spring 4.9x0.45x53 E10 + E12 + E14 + E16 + E18 + E7.2 + E8.2 + E9.2 + 10m.12 + E6.2(12m.10) + E14/12	023 504
4	Slider	241 694	503	Circlip	021 020
5	Stop point	241 368	504	Countersunk screw M4x10	241 914

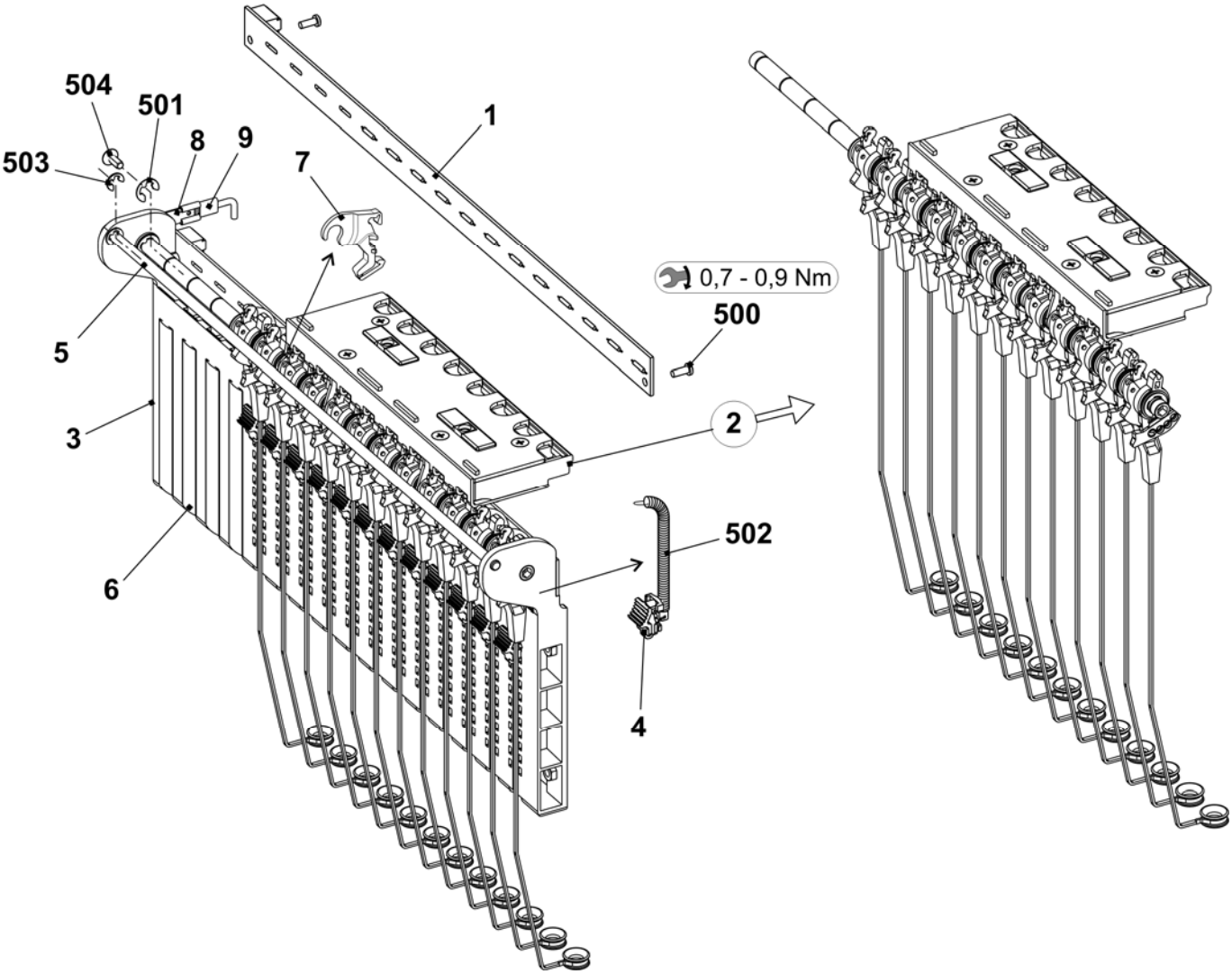

Yarn brake and yarn deflector

Pos	Designation	ID		Pos	Designation	ID
A	**Yarn brake co.**	**244 347**		**B**	**Yarn deflector**	**242 011**
1	Support	240 607		1	Support yarn deflector	242 009
2	Slider	240 606		2	Ceramic eyelet open	240 733
3	Brake disk	244 355				
4	Ceramic eyelet open	243 778				
500	Compression spring 0.65x20.15x14.80	241 361				
501	O-ring 11x2	241 434				

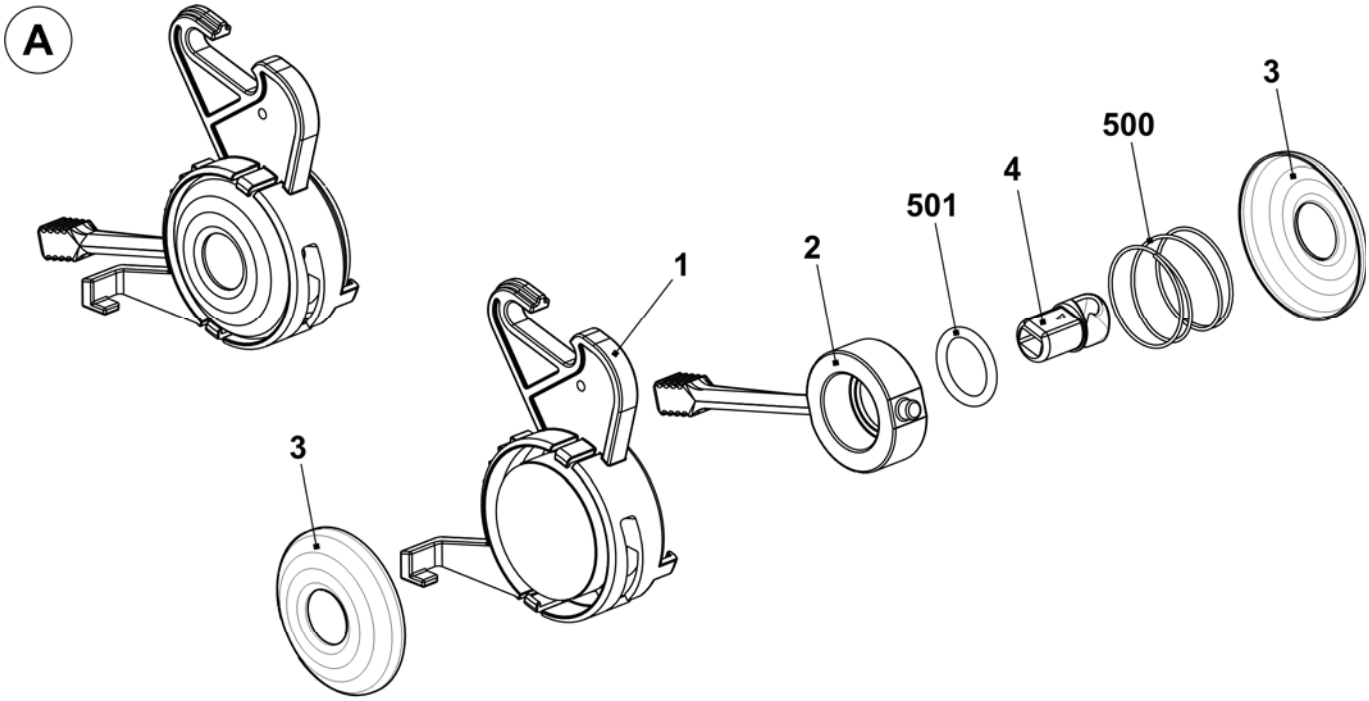

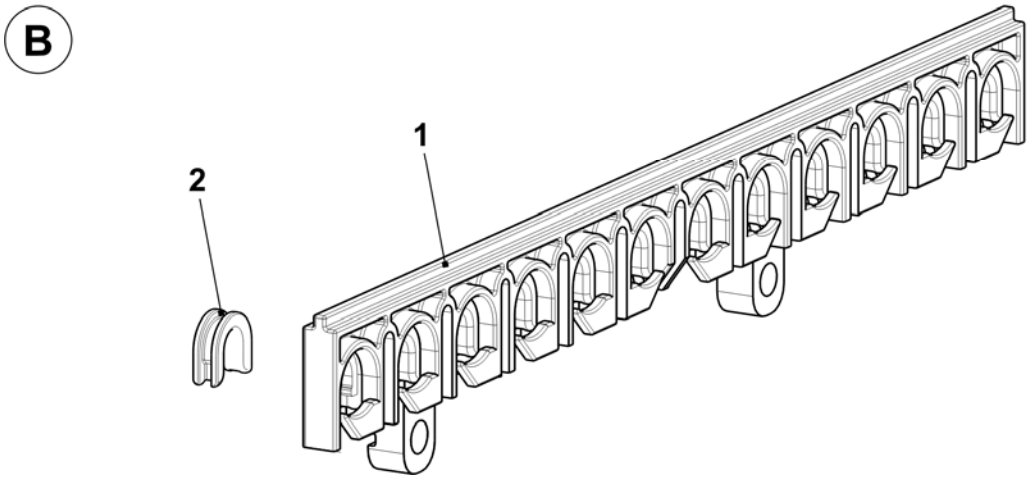

Left tension axle

Pos	Designation	ID
Σ	**Tension axle on the left co.**	
	E3 + E5 + E7 + E8 + E2,5.2 + E3,5.2 + E5.2 + E6.2 + E5m.4 + E7m.5 + E7m.8 + E8m.7	**241 366**
	E10 + E12 + E14 + E16 + E18 + E7.2 + E8.2 + E9.2 + 10m.12 + E6.2(12m.10) + E14/12	**241 381**
1	Axle	243 107
2	Tension arm pre-assembled	
	E3 + E5 + E7 + E8 + E2,5.2 + E3,5.2 + E5.2 + E6.2 + E5m.4 + E7m.5 + E7m.8 + E8m.7	242 770
	E10 + E12 + E14 + E16 + E18 + E7.2 + E8.2 + E9.2 + 10m.12 + E6.2(12m.10) + E14/12	242 771
6	Wire bow	238 694
500	Shim ring 8x14x0.5	023 501
501	Circlip	021 022

Pos	Designation	ID
502	Grooved pin 2x6	243 172
5	**Thread clamp AKF**	**238 695**
51	Housing AKF	238 689
52	Cover AKF	237 926
53	Sheet metal at the bottom (housing AKF)	240 719
54	Lever AKF	238 692
55	Thrust piece AKF	238 690
56	Slider AKF	238 691
57	Wire bow	238 694
58	Wire	237 940
551	Screw KB 35x12	237 681
552	Screw KB 40x8	236 227
553	Compression spring 0.30x4.50x18.50	241 437
554	Grooved pin 2x6	243 172

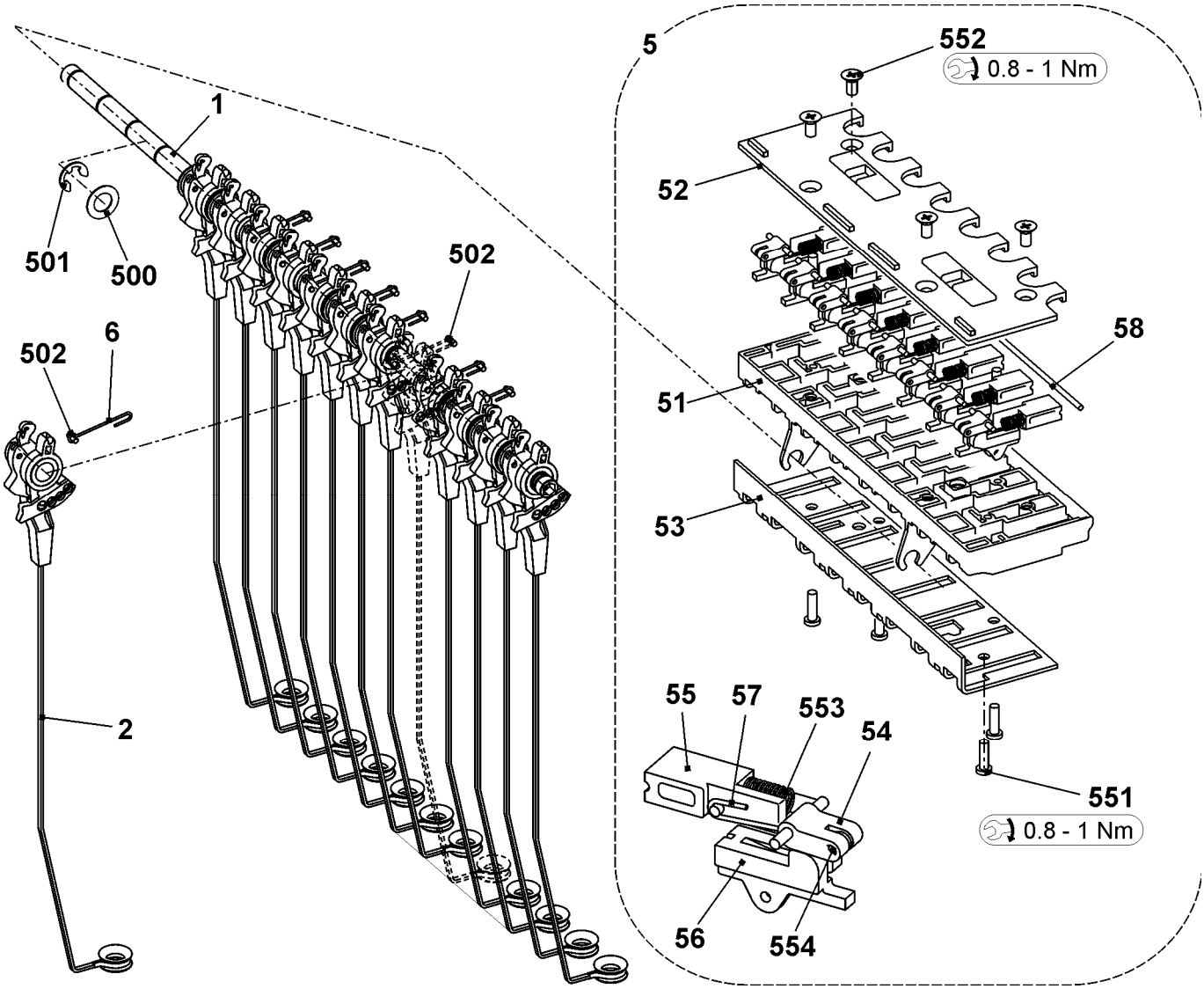

Right yarn guide

Pos	Designation	ID	Pos	Designation	ID
Σ	**Safety cover on the right co.**		9	Wire bow on the right	241 369
	E3 + E5 + E2,5.2 + E3,5.2 + E5.2 + E5m.4 + E7m.5	**241 274**	10	Yarn deflector	242 011
	E7 + E8 + E6.2 + E7m.8 + E8m.7	**241 275**	11	Connection cable yarn tensioner OKC	240 808
	E10 + E12 + E14 + E16 + E18 + E7.2 + E8.2 + E9.2 + 10m.12 + E6.2(12m.10) + E14/12	**241 276**	13	Yarn brake not adjustable	244 356
5	Yarn brake co.	244 347	14	Clamping bow	244 409
6	Shaft	241 318	15	Ground cable	244 404
7	Yarn tensioner on the right co.		501	Ceramic eyelet	240 640
	E3 + E5 + E2,5.2 + E3,5.2 + E5.2 + E5m.4 + E7m.5	241 382	502	Compression spring 0.90x5.40x13.60	241 360
	E7 + E8 + E6.2 + E7m.8 + E8m.7	241 383	504	U-washer 6	022 537
	E10 + E12 + E14 + E16 + E18 + E7.2 + E8.2 + E9.2 + 10m.12 + E6.2(12m.10) + E14/12	241 384	510	Screw KB 60x20	237 682
8	Cover	240 783	512	Flat connector 2x45 M6	243 117

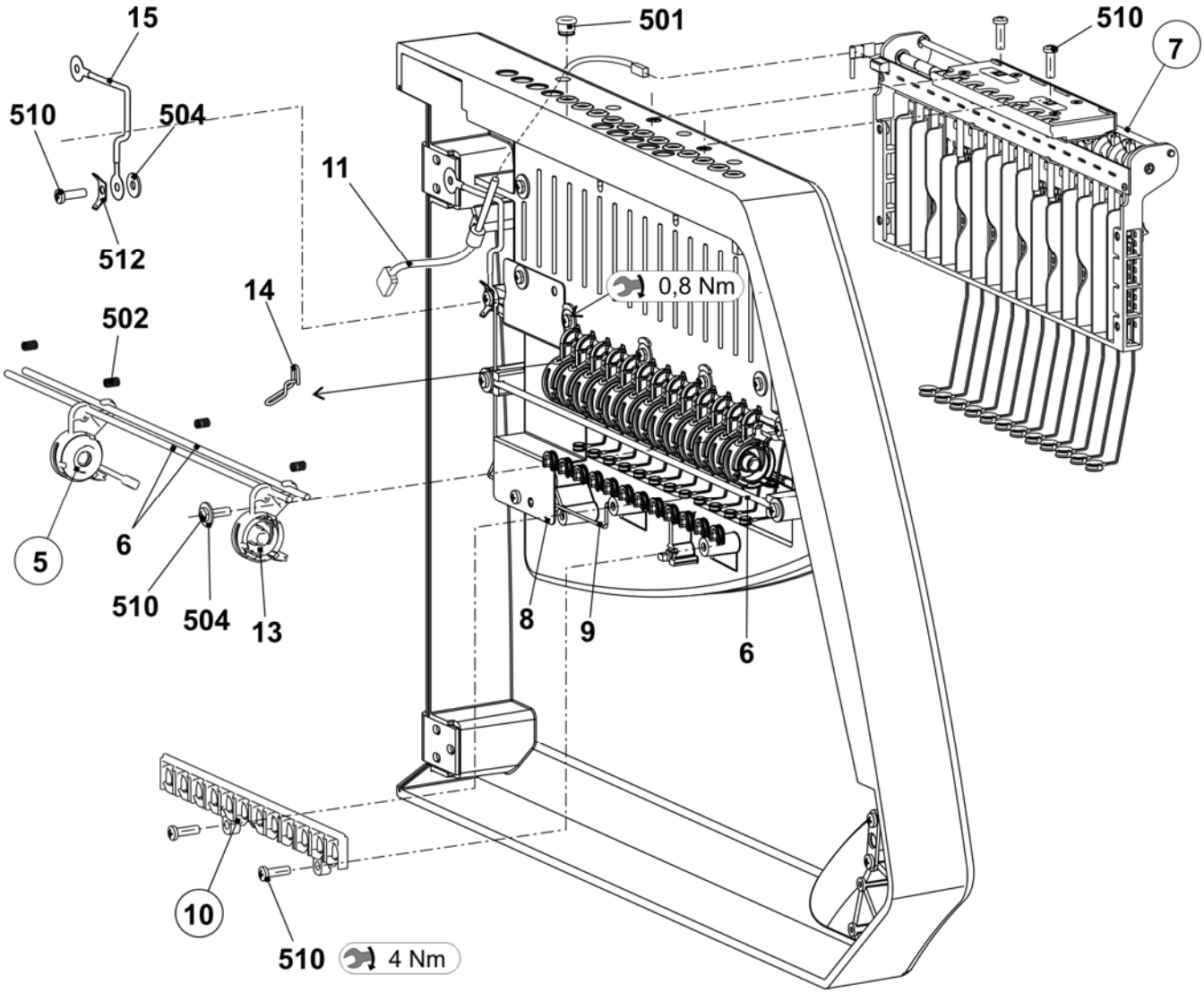

Right yarn tensioner

Pos	Designation	ID	Pos	Designation	ID
Σ	**Yarn tensioner on the right**		6	Cover	242 268
	E3 + E5 + E2,5.2 + E3,5.2 + E5.2 + E5m.4 + E7m.5	**241 382**	7	Spacer	242 048
	E7 + E8 + E6.2 + E7m.8 + E8m.7	**241 383**	8	Grounding sheet metal of tension axle	243 121
	E10 + E12 + E14 + E16 + E18 + E7.2 + E8.2 + E9.2 + 10m.12 + E6.2(12m.10) + E14/12	**241 384**	9	Ground cable yarn tensioner OKC	243 105
1	Card yarn tensioner 16-fold on the right	241 346	500	Screw KB 30x8	236 228
2	Tension axle on the right co.		501	Circlip	021 022
	E3 + E5 + E7 + E8 + E2,5.2 + E3,5.2 + E5.2 + E6.2 + E5m.4 + E7m.5 + E7m.8 + E8m.7	241 379	502	Tension spring 5.05x0.55x53 E3-5 (E2,5.2 + E3,5.2 + E5.2 + E5m.4 + E7m.5)	023 502
	E10 + E12 + E14 + E16 + E18 + E7.2 + E8.2 + E9.2 + 10m.12 + E6.2(12m.10) + E14/12	241 380		Tension spring 4.9x0.5x53 E7 + E8 + E6.2 + E7m.8 + E 8m.7	023 503
3	Housing	241 367		Tension spring 4.9x0.45x53 E10 + E12 + E14 + E16 + E18 + E7.2 + E8.2 + E9.2 + 10m.12 + E6.2(12m.10) + E14/12	023 504
4	Slider	241 694	503	Circlip	021 020
5	Stop point	241 368	504	Countersunk screw M4x10	241 914

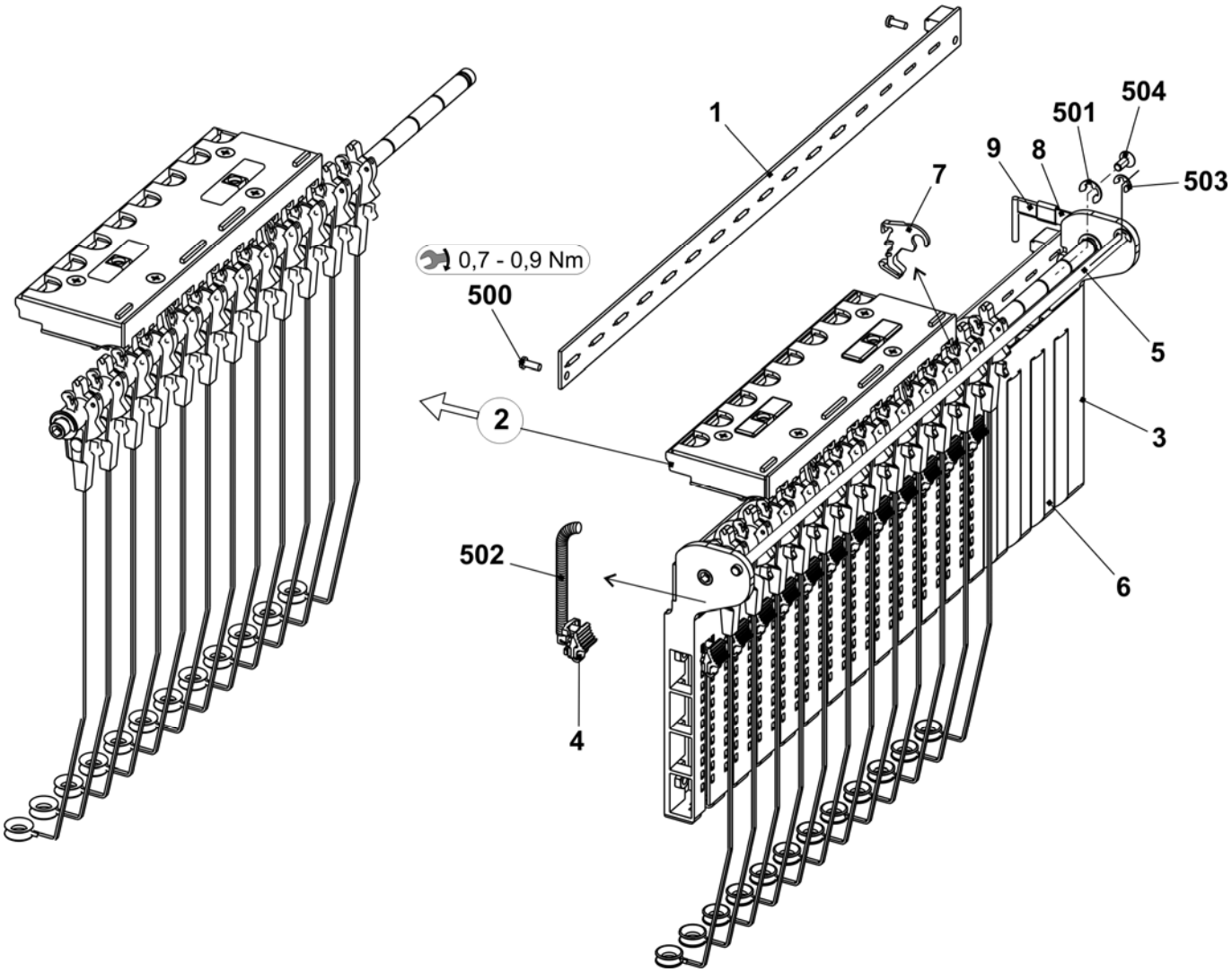

Right tension axle

Pos	Designation	ID	Pos	Designation	ID
Σ	**Tension axle on the right co.**		502	Grooved pin 2x6	243 172
	E3 + E5 + E7 + E8 + E2,5.2 + E3,5.2 + E5.2 + E6.2 + E5m.4 + E7m.5 + E7m.8 + E8m.7	**241 379**	**5**	**Thread clamp AKF**	**238 695**
			51	Housing AKF	238 689
	E10 + E12 + E14 + E16 + E18 + E7.2 + E8.2 + E9.2 + 10m.12 + E6.2(12m.10) + E14/12	**241 380**	52	Cover AKF	237 926
			53	Sheet metal at the bottom (housing AKF)	240 719
1	Axle	243 107	54	Lever AKF	238 692
2	Tension arm pre-assembled		55	Thrust piece AKF	238 690
	E3 + E5 + E7 + E8 + E2,5.2 + E3,5.2 + E5.2 + E6.2 + E5m.4 + E7m.5 + E7m.8 + E8m.7	242 770	56	Slider AKF	238 691
			57	Wire bow	238 694
	E10 + E12 + E14 + E16 + E18 + E7.2 + E8.2 + E9.2 + 10m.12 + E6.2(12m.10) + E14/12	242 771	58	Wire	237 940
			551	Screw KB 35x12	237 681
6	Wire bow	238 694	552	Screw KB 40x8	236 227
500	Shim ring 8x14x0.5	023 501	553	Compression spring 0.30x4.50x18.50	241 437
501	Circlip	021 022	554	Grooved pin 2x6	243 172

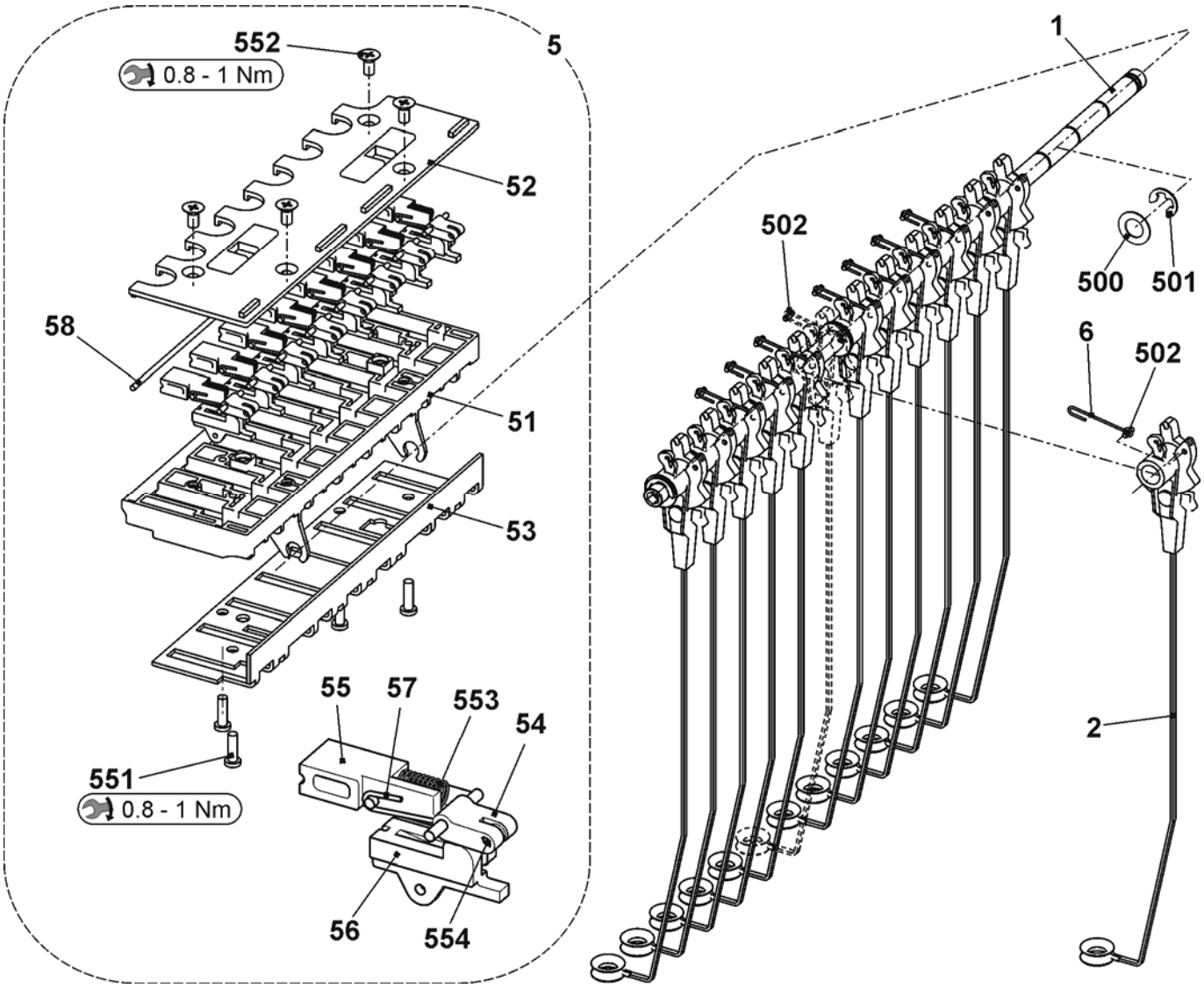

Bobbin board

Pos	Designation		ID	Pos	Designation	ID
Σ	**Table co. 84” (E5-14)**		**240 681**			
	Table co. 84” without feed wheel support		**251 358**			
1	Table		251 246	15	Positioning pin	204 819
4	Support element		228 594	20	Energy chain display (38 links)	253 888
7	Magnet switch protective hood		219 983	37	Cable USB extension 84 OKC	243 070
8	Magnet switch protective hood		220 159	40	Sliding block	228 851
10	Guide rail at the top co.		240 684	42	Support of left feed wheel	250 966
14	Lamp at the top co.		236 693	43	Support of right feed wheel	250 967
	14a	Lamp long RL60V - 230 V	212 580	504	Countersunk screw M8x16	023 113
	14b	Clamping bow	209 504	516	Countersunk screw M3x8	023 251
	14c	Cellular caoutchouc 40x20	208 018	518	Countersunk screw M8x18	251 331
	14d	Lamp support	221 951	520	U-washer	020 901

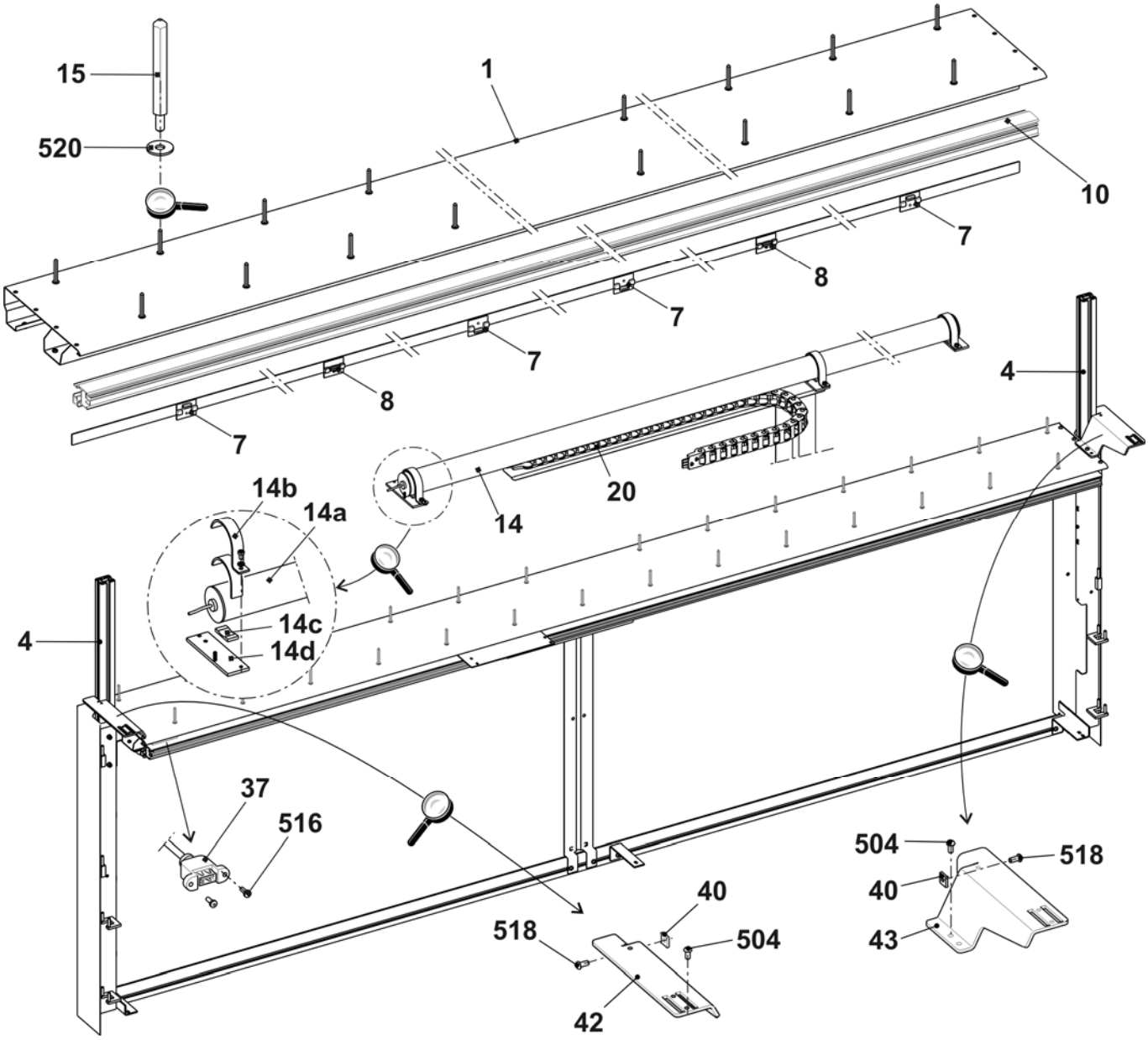

Yarn carrier and guide rails

Pos	Designation	ID
Σ	**Yarn guide co. E5**	**244 003**
	Yarn guide co. E7 – E8	**244 004**
	Yarn guide co. E10 – E14	**244 005**
	Yarn guide co. E16 – E18	**244 006**
5	Limiter on the left co.	244 099
6	Limiter on the right co.	244 098
7	Slider with eyelet	230 709
9	Yarn carrier bar	255 467
10	YC carriage co.	243 062
11	Yarn guide wheel co.	209 257
13	Shim	213 035
500	Hexagon screw M5x10	020 351

Pos	Designation	ID
E5, E5m.4 + E7m.5, E2,5.2 + E3,5.2 +E5.2		
1	YC bow 1+8 co. E5	212 990
2	YC bow 2+7 co. E5	212 992
3	YC bow 3+6 co. E5	212 991
4	YC bow 4+5 co. E5	212 993
E7 + E8, E6.2 + E7.2		
1	YC bow 1+8 co. E7-8	212 892
2	YC bow 2+7 co. E7-8	212 914
3	YC bow 3+6 co. E7-8	212 925
4	YC bow 4+5 co. E7-8	212 910
E10 - E14, E10m.12 + E14/12, E6.2 (E12M.10) + E8.2		
1	YC bow 1+8 co. E10-14	212 994
2	YC bow 2+7 co. E10-14	212 996
3	YC bow 3+6 co. E10-14	212 995
4	YC bow 4+5 co. E10-14	212 997
E16 + E18, E9.2		
1	YC bow 1+8 co. E16-18	223 199
2	YC bow 2+7 co. E16-18	223 201
3	YC bow 3+6 co. E16-18	223 200
4	YC bow 4+5 co. E16-18	223 202

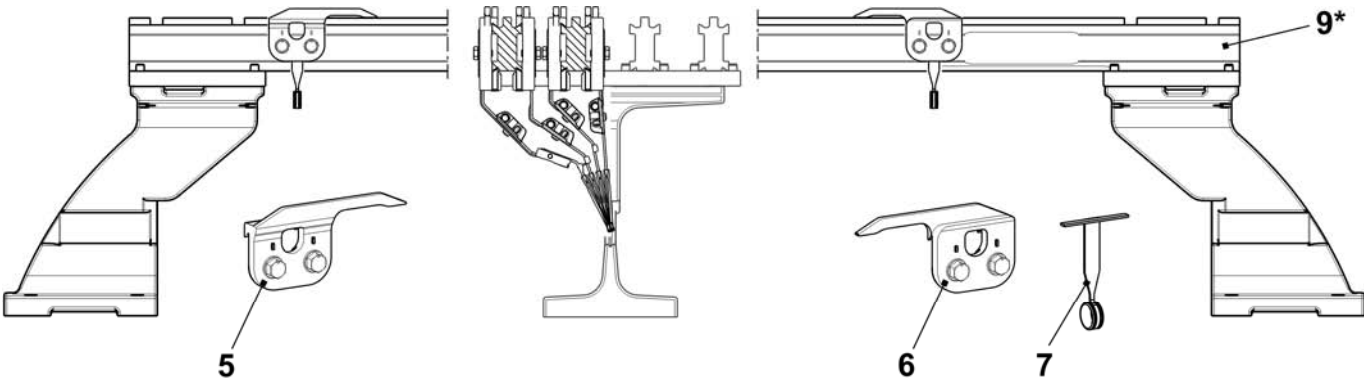

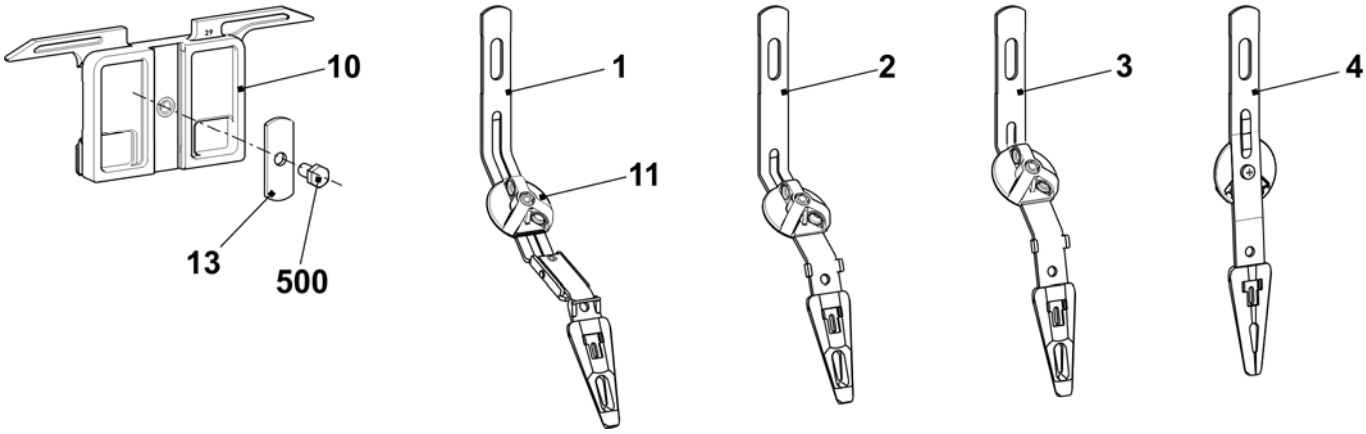

Co. yarn carriers

Pos	Designation	Track	ID
E5, E5m.4 + E7m.5, E2,5.2 + E3,5.2 +E5.2			
1	YC carriage co. E5	1+8	243 935
2	YC carriage co. E5	2+7	243 934
3	YC carriage co. E5	3+6	243 933
4	YC carriage co. E5	4+5	243 932
E7 + E8, E6.2 + E7.2 + E7m.8 + E8m.7			
1	YC carriage co. E7-8	1+8	243 939
2	YC carriage co. E7-8	2+7	243 938
3	YC carriage co. E7-8	3+6	243 937
4	YC carriage co. E7-8	4+5	243 936

Pos	Designation	Track	ID
E10 - E14, E10m.12, E6.2 (E12M.10) + E8.2			
1	YC carriage co. E10-14	1+8	243 943
2	YC carriage co. E10-14	2+7	243 942
3	YC carriage co. E10-14	3+6	243 941
4	YC carriage co. E10-14	4+5	243 940
E16 + E18			
1	YC carriage co. E16-18	1+8	243 947
2	YC carriage co. E16-18	2+7	243 946
3	YC carriage co. E16-18	3+6	243 945
4	YC carriage co. E16-18	4+5	243 944

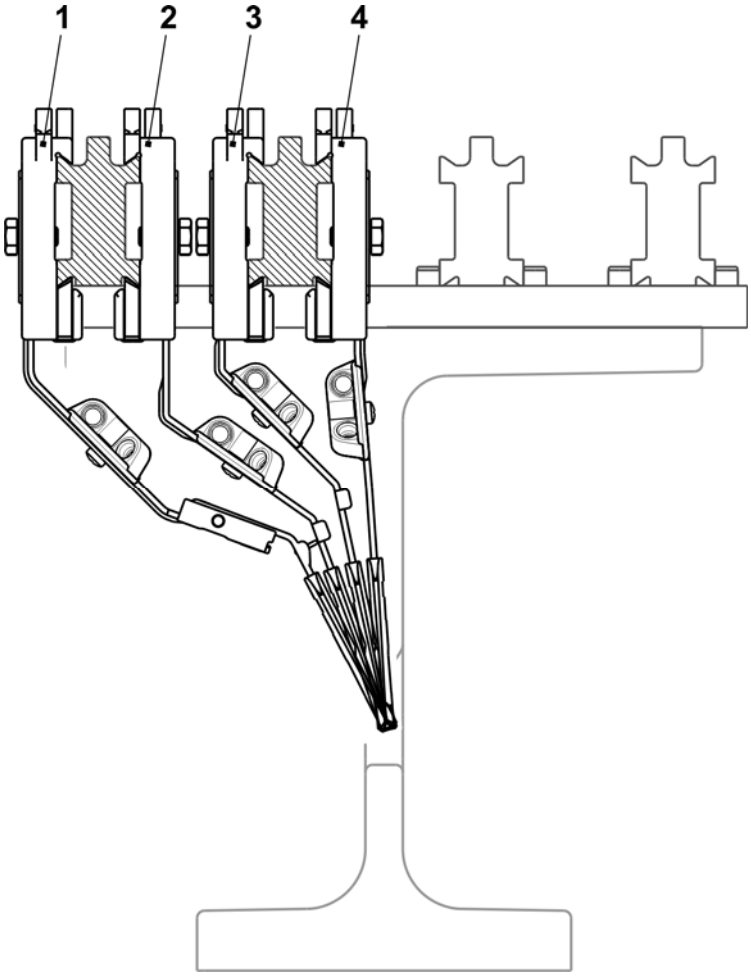

Left friction feed wheel

Pos	Designation		ID	Pos	Designation	ID
Σ	**Friction feed wheel on the left co.**		**243 571**	13	Bush	221 391
1	Housing		240 368	14	Ribbed V-belt pulley	221 268
2	Friction roller co.		231 704	15	Ribbed V-belt pulley V3J 406	206 927
3	Three-phase AC motor co.		219 800	16	Rod	221 319
	3a	Microswitch	008 664	17	Supporting plate	251 096
4	Deflector co. 8-fold		250 089	18	Cover	230 758
	4a	Support rail	250 055	19	Knurled screw	223 361
	4b	Eyelet holder co.	250 077	20	Rod	230 658
	540	Spring dowel sleeve 4x15	020 783	500	Screw KB30x8	236 228
	541	Hexagon nut M8-8	022 843	501	Screw 20x10	244 736
7	Yarn guide rod co.		239 431	503	Cap screw M5x12	020 132
	570	Eyelet 8	021 504	504	Cap screw M5x16	022 726
8	Stop motion rail on the right co.		230 690	506	Screw KB 40x14	241 358
9	Stop motion rail on the left co. with eyelets		230 683	507	Screw KB 40x25	241 595
	9b	Eyelet	230 662	509	Washer 5.3x22x2.5	023 219
	590	Slide bearing	023 627	510	U-washer 5	020 901
	591	O-ring	244 895	512	Adjusting washer 15x21x1	023 216
11	Strap		221 316	514	U-washer 4.3	020 908
12	Cover		251 098	515	Countersunk screw M4x10	023 450

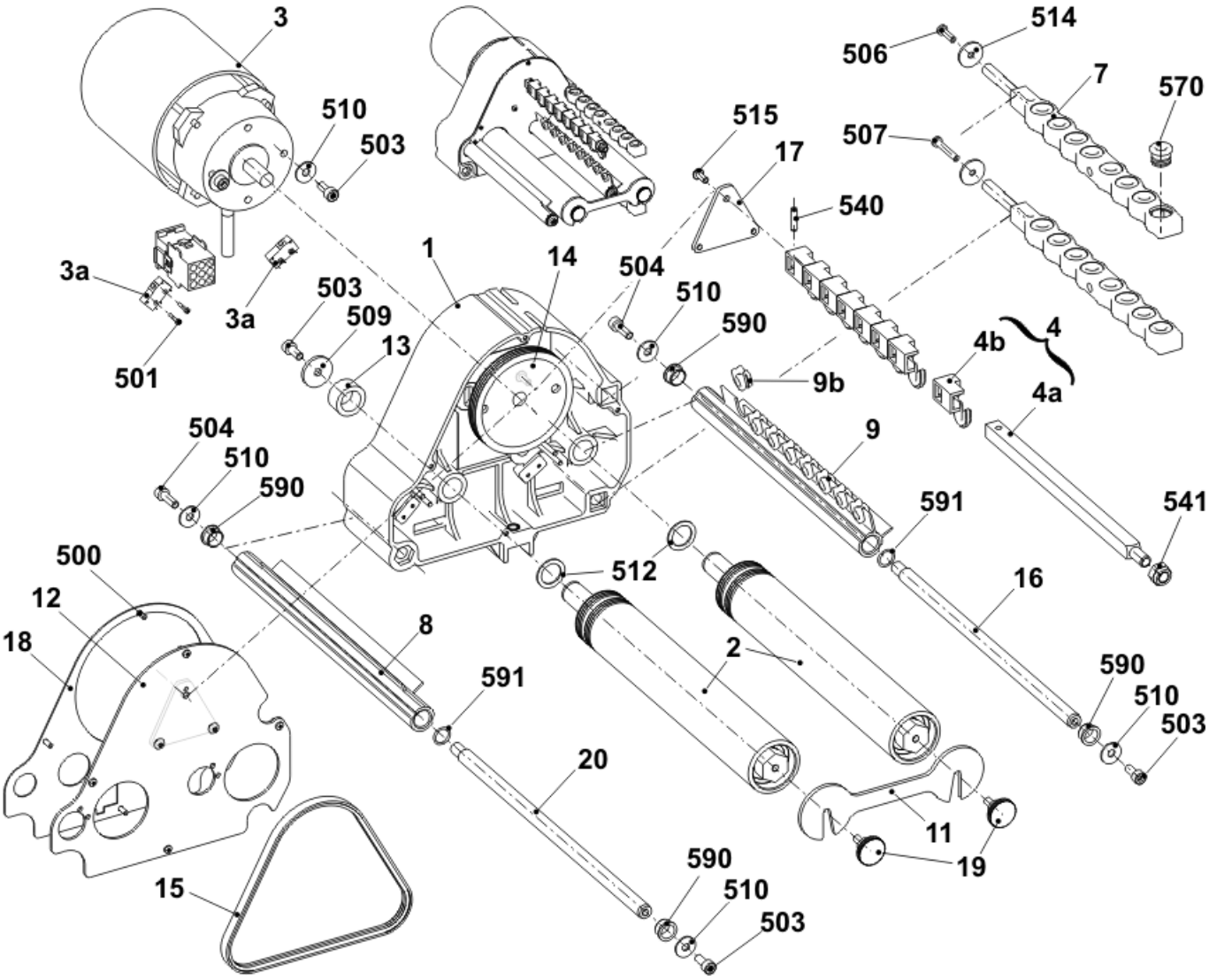

Right friction feed wheel

Pos	Designation		ID	Pos	Designation	ID
Σ	**Friction feed wheel on the right co.**		**243 572**	13	Bush	221 391
1	Housing		240 368	14	Ribbed V-belt pulley	221 268
2	Friction roller co.		231 704	15	Ribbed V-belt pulley V3J 406	206 927
3	Three-phase AC motor co.		219 800	16	Rod	221 319
	3a	Microswitch	008 664	17	Supporting plate	251 096
4	Deflector co. 8-fold		250 089	18	Cover	230 758
	4a	Support rail	250 055	19	Knurled screw	223 361
	4b	Eyelet holder co.	250 077	20	Rod	230 658
	540	Spring dowel sleeve 4x15	020 783	500	Screw KB30x8	236 228
	541	Hexagon nut M8-8	022 843	501	Screw 20x10	244 736
7	Yarn guide rod co.		239 431	503	Cap screw M5x12	020 132
	570	Eyelet 8	021 504	504	Cap screw M5x16	022 726
8	Stop motion rail on the right co.		230 690	506	Screw KB 40x14	241 358
9	Stop motion rail on the right co. with eyelets		230 682	507	Screw KB 40x25	241 595
	9b	Eyelet	230 662	509	Washer 5.3x22x2.5	023 219
	590	Slide bearing	023 627	510	U-washer 5	020 901
	591	O-ring	244 895	512	Adjusting washer 15x21x1	023 216
11	Strap		221 316	514	U-washer 4.3	020 908
12	Cover		251 098	515	Countersunk screw M4x10	023 450

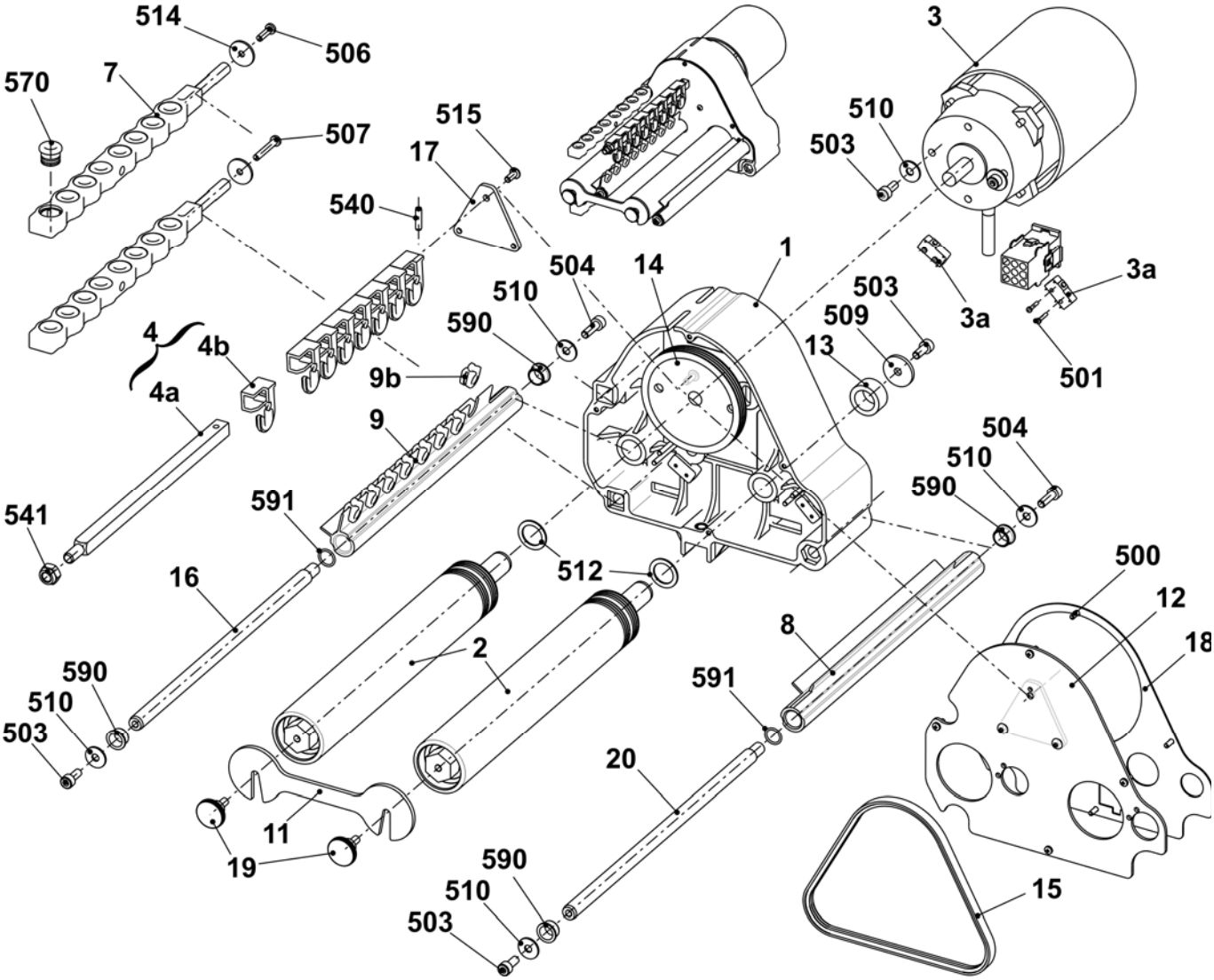

Fluff absorption

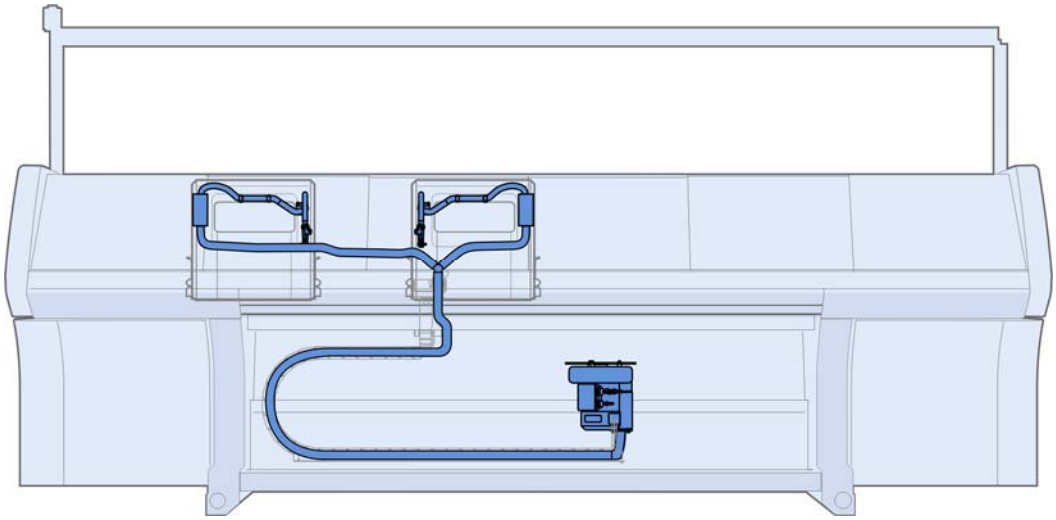

Fluff absorption

Pos	Designation	ID		Pos	Designation	ID
Σ	**Fluff absorption**					
1	Suction fan co.	251 332		7	Suction hose 29x25x1300	251 347
2	Suction hose 29x25x2850	252 747		8	Suction hose 29x25x350	252 746
3	Hose connector 25 mm	245 011		9	Hose fitting	214 653
4	Lint container	245 024		550	Countersunk head screw M4x8	251 011
5	Set of tubes on the left co. 822	251 343		551	Cap screw M4x8	022 501
6	Set of tubes on the right co. 822	251 344				

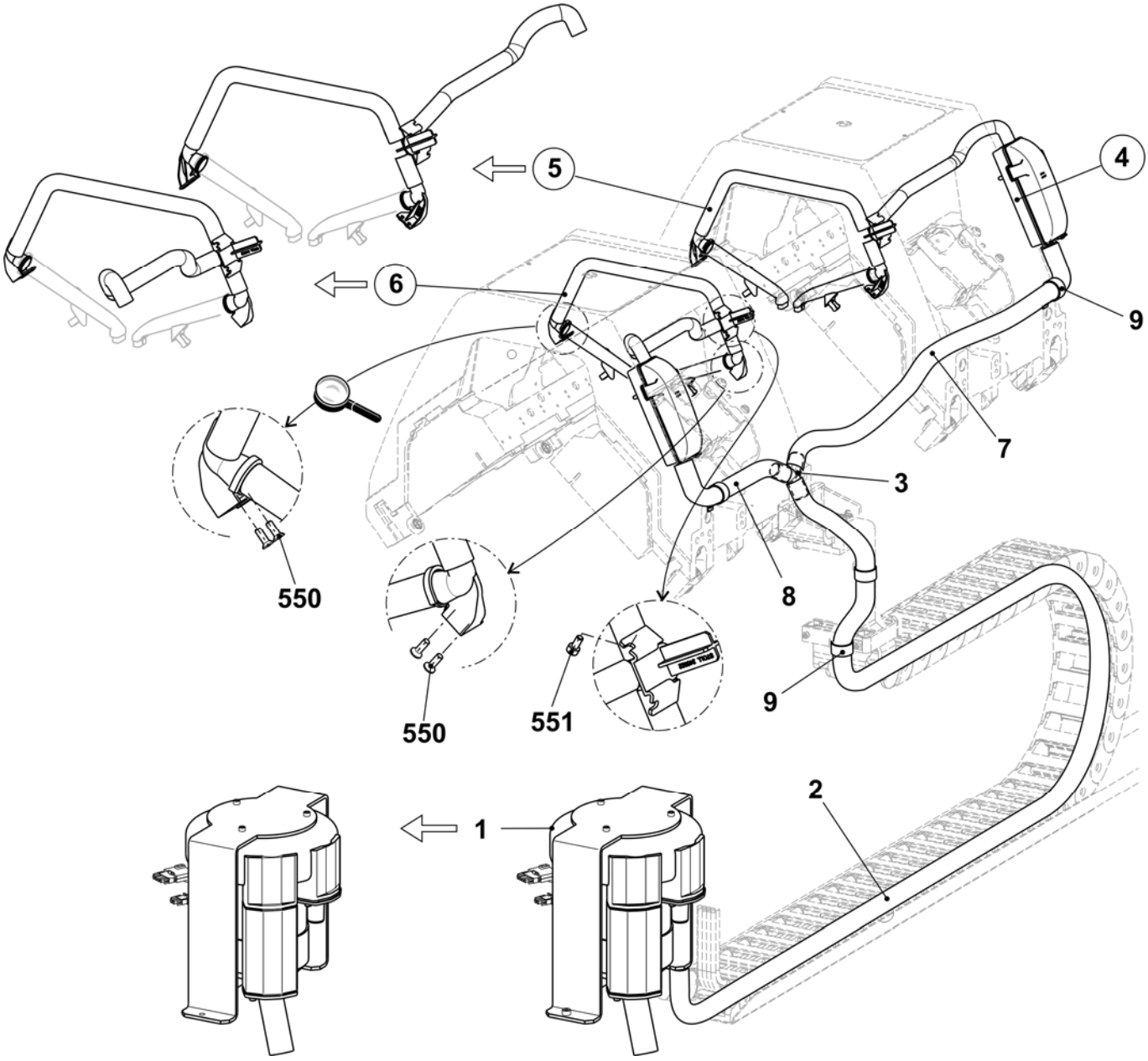

Lint container

Pos	*Designation*	*ID*		*Pos*	*Designation*	*ID*
Σ	**Lint container**			6*	Sealing plug	245 029
1	Lint container	245 024		10*	Cover with filter	251 335
5*	Sealing plug	245 028		501*	Cap screw M6x10	023 690

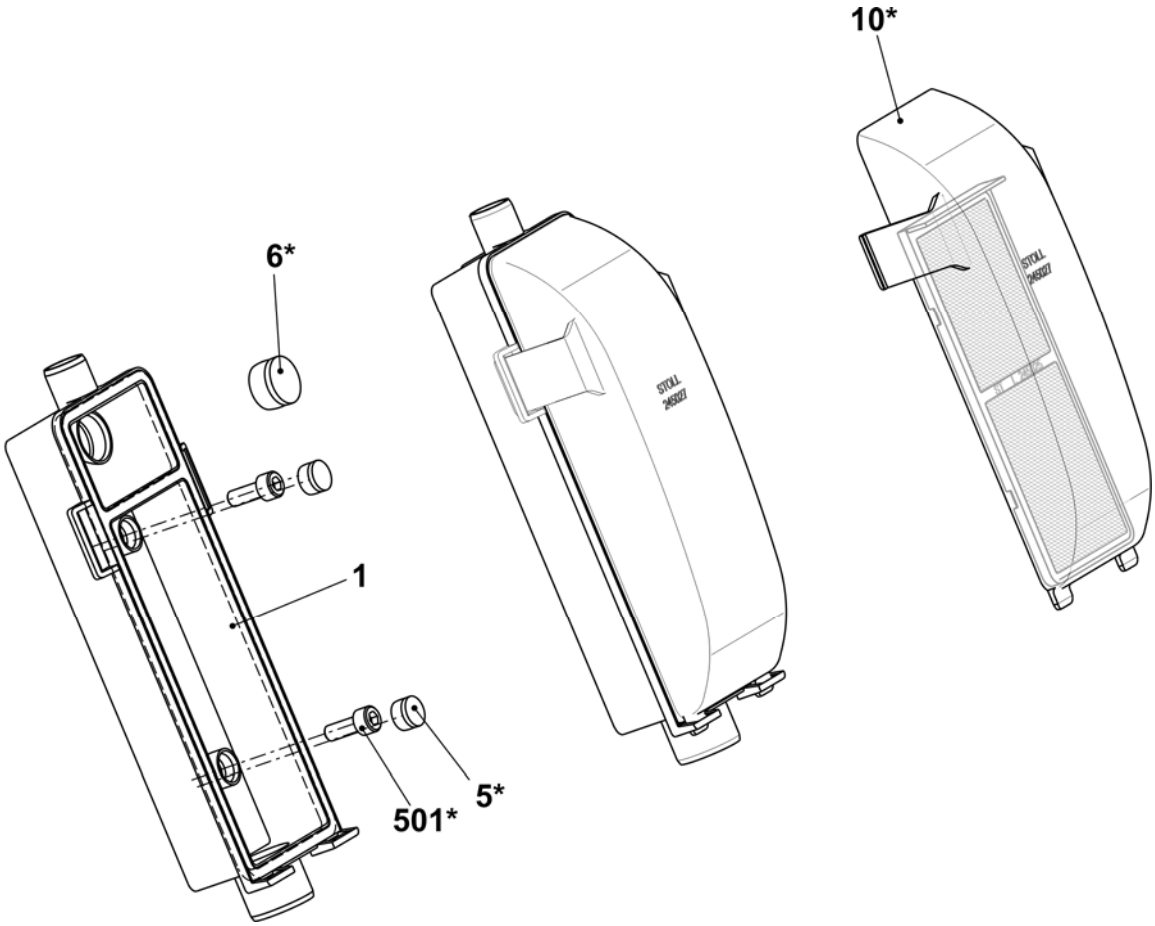

Set of tubes on the left and right

Pos	Designation	ID	Pos	Designation		ID
L	**Set of tubes on the left co. 822**	**251 343**	7*	Suction tube co. (E5-14)		251 312
R	**Set of tubes on the right co. 822**	**251 344**		Suction tube co. (E16-18)		251 313
1	Angle connection on the right	250 121		7a*	Suction tube	250 120
2	Angle connection on the left	251 101		7b*	Bracket	250 805
3	Connection piece Flent	245 022		7c*	Brush (E5-14)	251 041
500	Suction hose 20x16x440	244 983			Brush (E16-18)	251 042
501	Suction hose 20x16x40	251 043		570*	Screw KB30x6	241 424
502	Suction hose 20x16x420	251 045	504*	Countersunk head screw M4x8		251 011
			506*	Cable clip		250 051
			531*	Cap screw M4x8		022 501

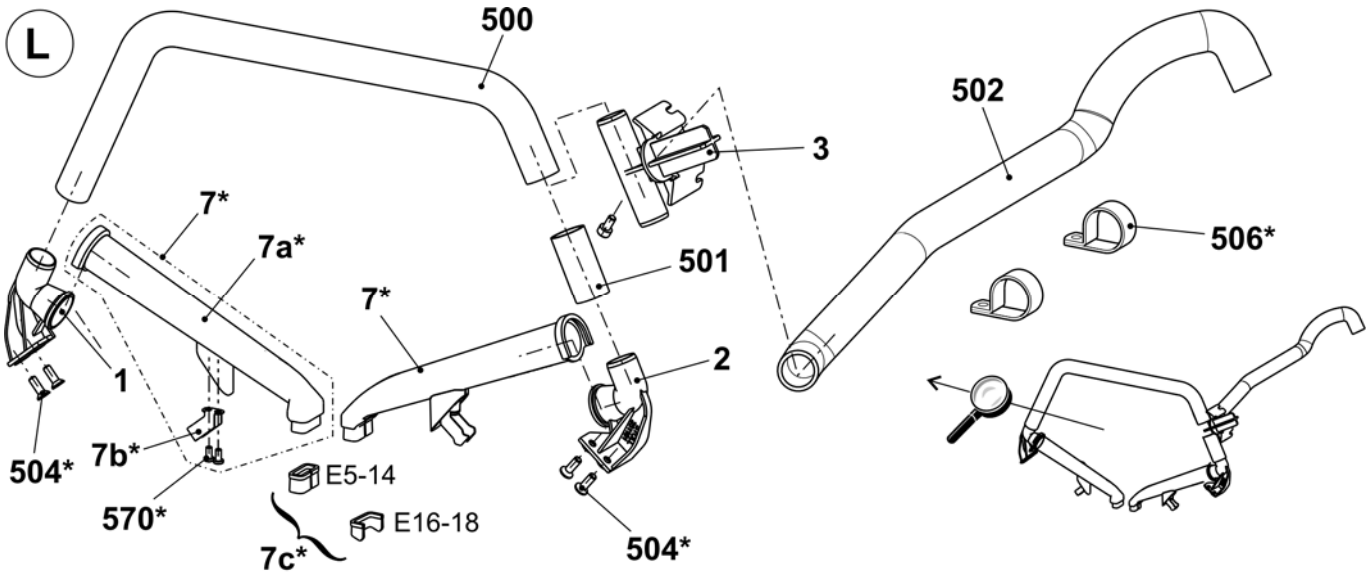

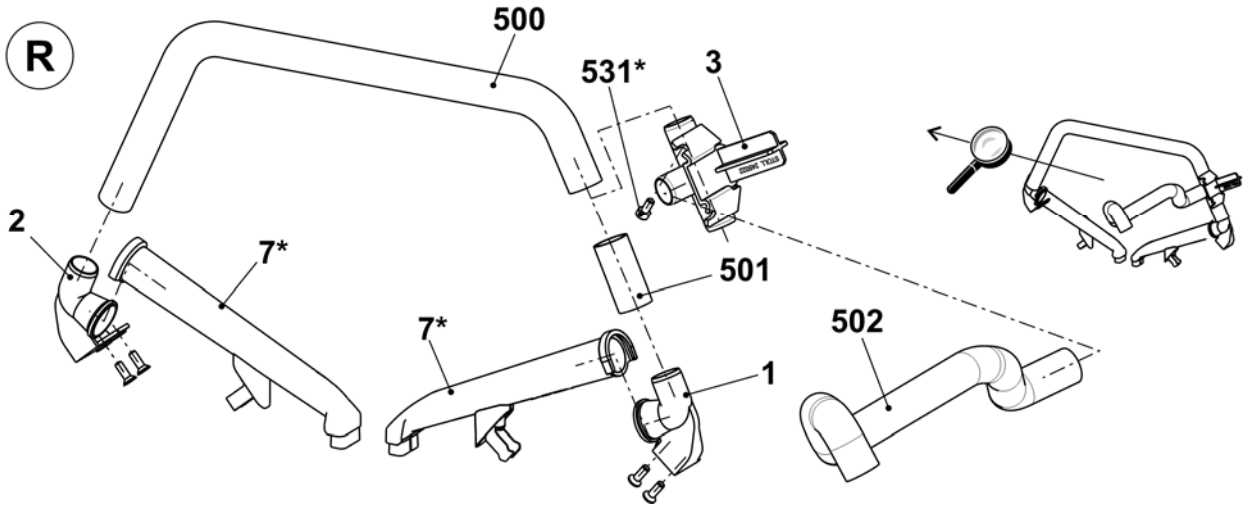

Operation and control

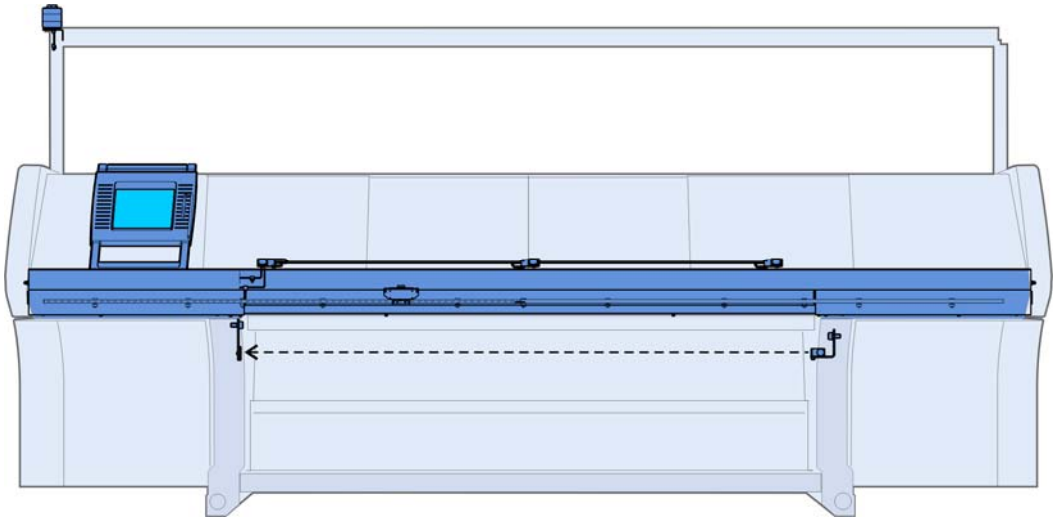

Input unit

Pos	Designation	ID		Pos	Designation	ID
Σ	**Input unit co.**	**240 194**		6	Touch pen	242 812
1	Base frame	240 195		10*	Touch panel spare parts package	244 554
3	Bearing strip co.	240 198		502	U-washer	020 901
4	Display touch co.	250 298		503	Screw KB 50x12	240 359

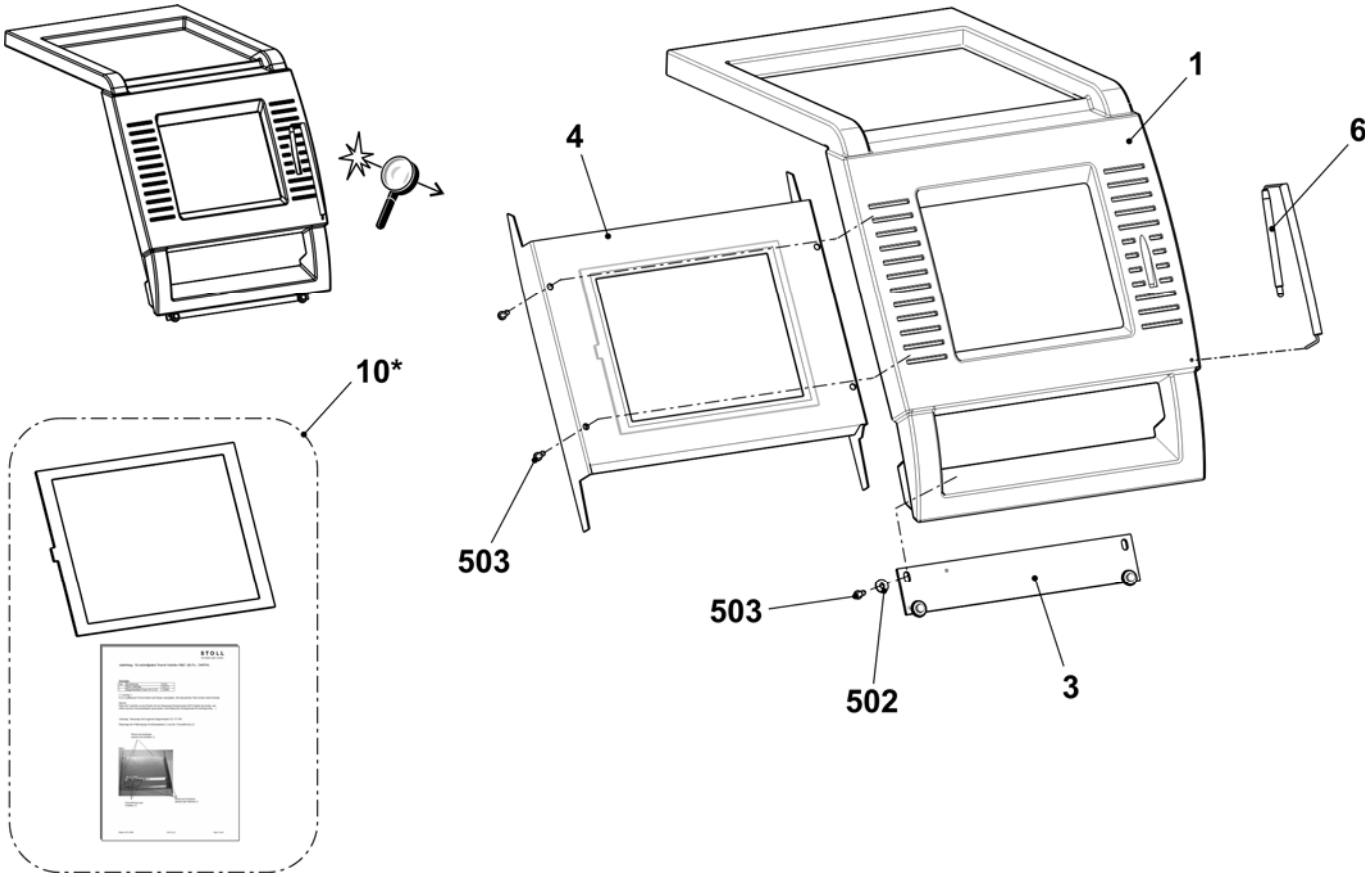

Starting unit

Pos	Designation	ID		Pos	Designation	ID
Σ	**Starting unit co.**	**241 039**				
1	Engaging rod	241 030		502	Cap screw M6x16	020 135
2	Bearing on the left co.	250 071		503	Countersunk screw M5x14	023 588
3	Guide rail at the bottom co.	251 227		504	Cap screw M6x20-12.9	020 136
6	Cover plate on the right	251 216		505	Cap screw M6x12	020 134
7	Cover plate on the left	251 217		507	U-washer	020 872
8	Fixing bolt	219 107		509	Screw M6x25	023 510
9	Switch with cable to protective hoods	223 350		511	Adhesive base	243 055
10	Sliding nut (sliding block)	225 099		512	Cap screw M6x10	023 690
11	Bearing on the right co.	252 964		520*	Countersunk screw M6x16	023 124

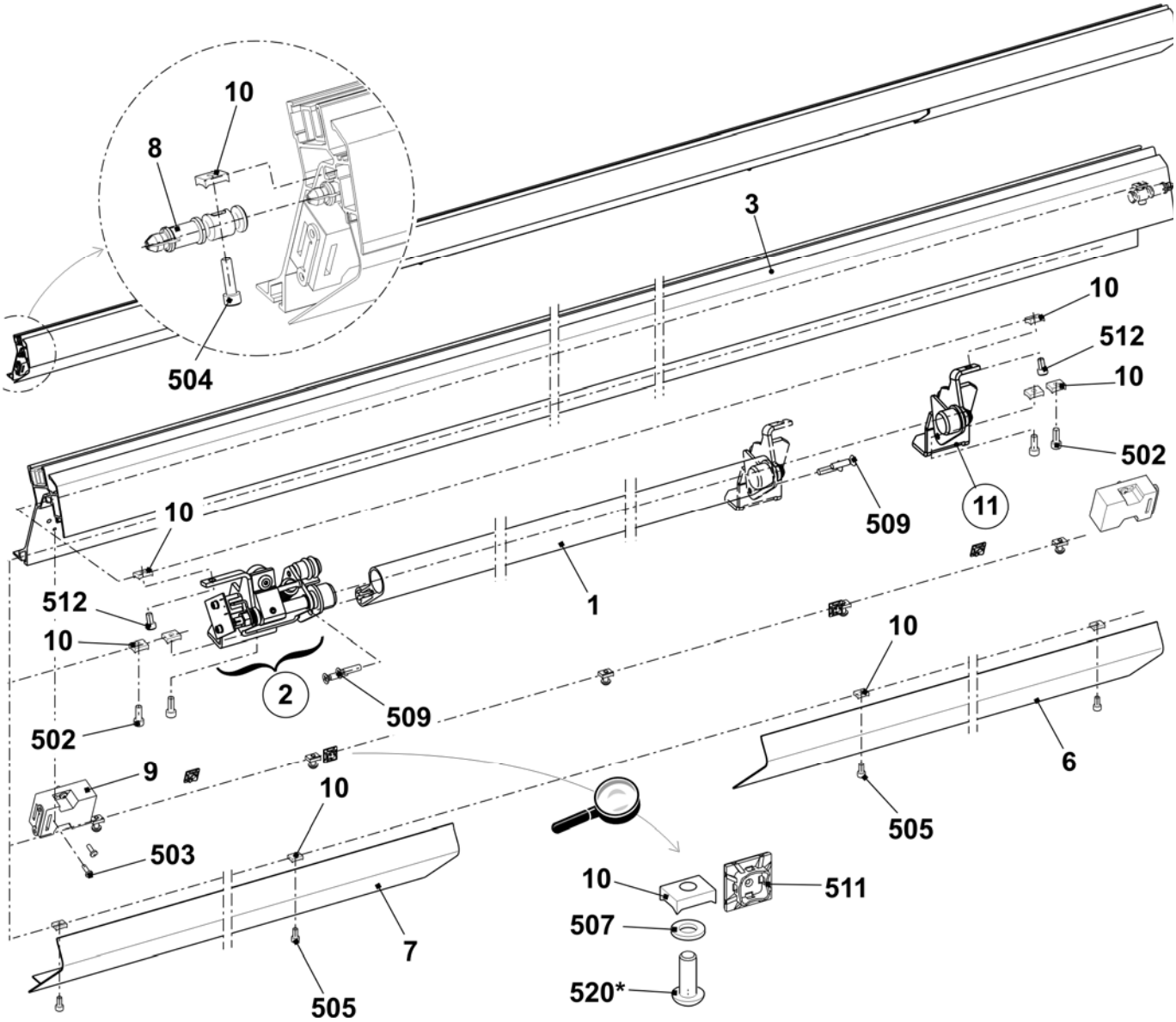

Bearing of the engaging rod

Pos	Designation	ID	Pos	Designation	ID
L	**Bearing on the left co.**	**250 071**			
1	Bearing on the left	245 218	505	Hexagon nut M8-6	020 838
	1a Clip bearing MCM12-04	023 639	506	Dowel pin 1.5x8	236 923
2	Support buffer	220 561	507	Spring dowel sleeve 6x20	023 719
	2a O-ring 14x4	023 237	508	Shoulder screw M4x24.8x7.7	240 299
3	Shaft on the left	245 219	509	Shoulder screw	251 316
4	Rotor	253 776	510	Shim ring 12x18x1	023 315
5	Switch flag	245 220	511	Locking ring 12x1	020 951
6	Spring pin	251 340	512	Compression spring 1.25x15x98.2	023 609
7	Disc	245 222	513	Compression spring 0.5x11x12	251 369
8	Shoulder screw	254 528			
9	Distance bolt	240 287	**R**	**Bearing on the right co.**	**252 964**
500	Cap screw M4x6	023 067	1	Bearing on the right	240 230
501	Cap screw M4x8	022 501		1a Clip bearing MCM 12-04	023 639
502	Shim ring 4x8x1	023 369	2	Shaft on the right	242 888
503	Card engaging OKC	240 167	500	Shim ring 12x18x1	023 315
504	Adhesive magnet direct current	026 233	502	Locking ring 12x1	020 951

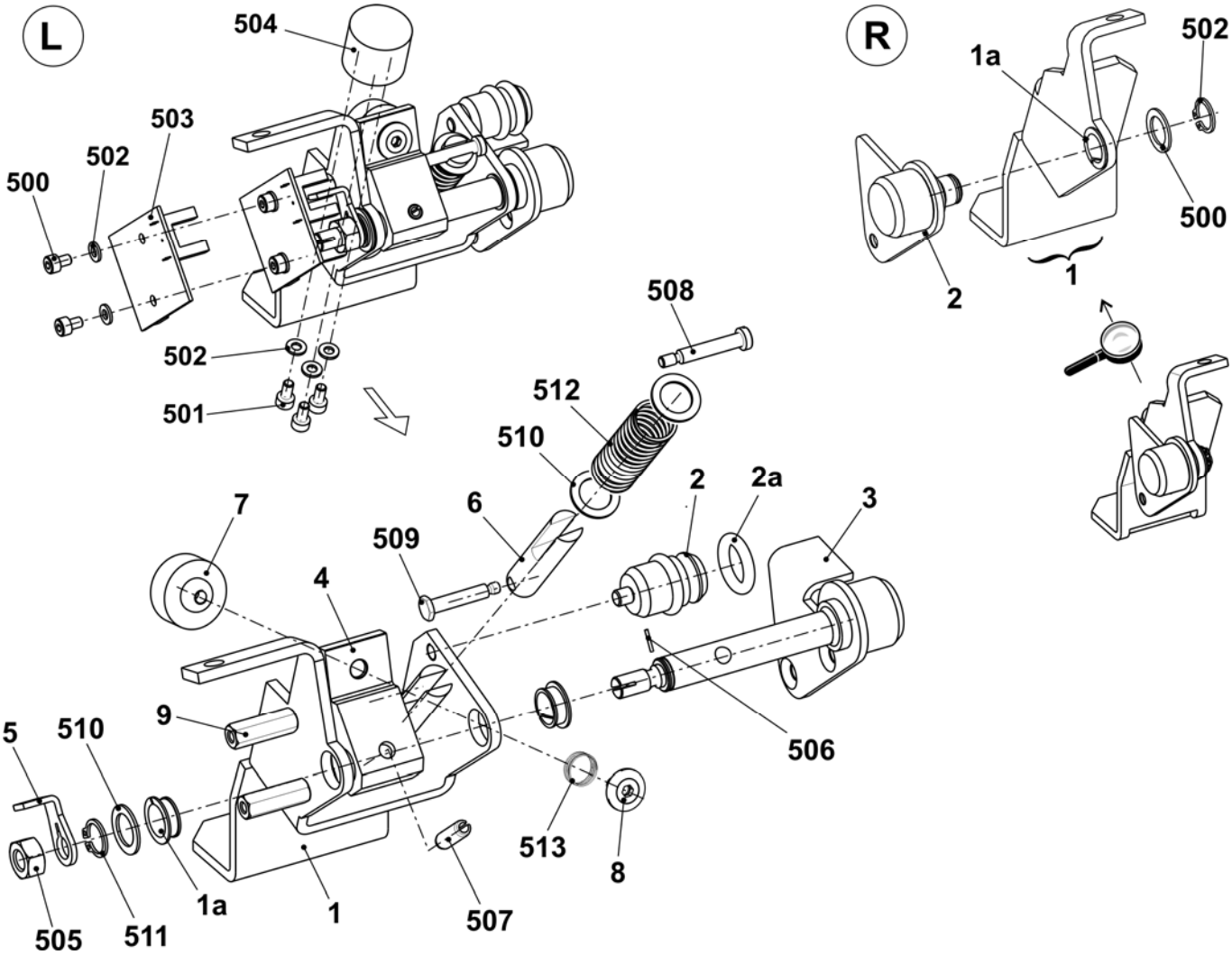

Signal light

Pos	Designation		ID		Pos	Designation	ID
Σ	**Signal light LED single lamp with horn**		**251 153**				
	500	Countersunk screw M4x14	023 037				
	501	Serrated lock washer A4.3-FS	022 482				

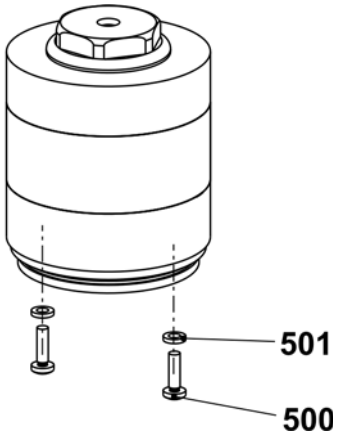

Collecting area - control

Pos	Designation	ID	Pos	Designation	ID
Σ	**Collecting area - control**				
1	Angle support photoelectric sensor	243 353	504	Photoelectric sensor WI100-P4330	243 355
2	Mounting plate reflector	243 354	505	Reflector 20x20 mm	243 356
501	Cap screw M3x10	022 991	900	Cap screw M6x12	020 134
502	Blind rivet A3x8-Al	023 158	901	U-washer 6	020 872

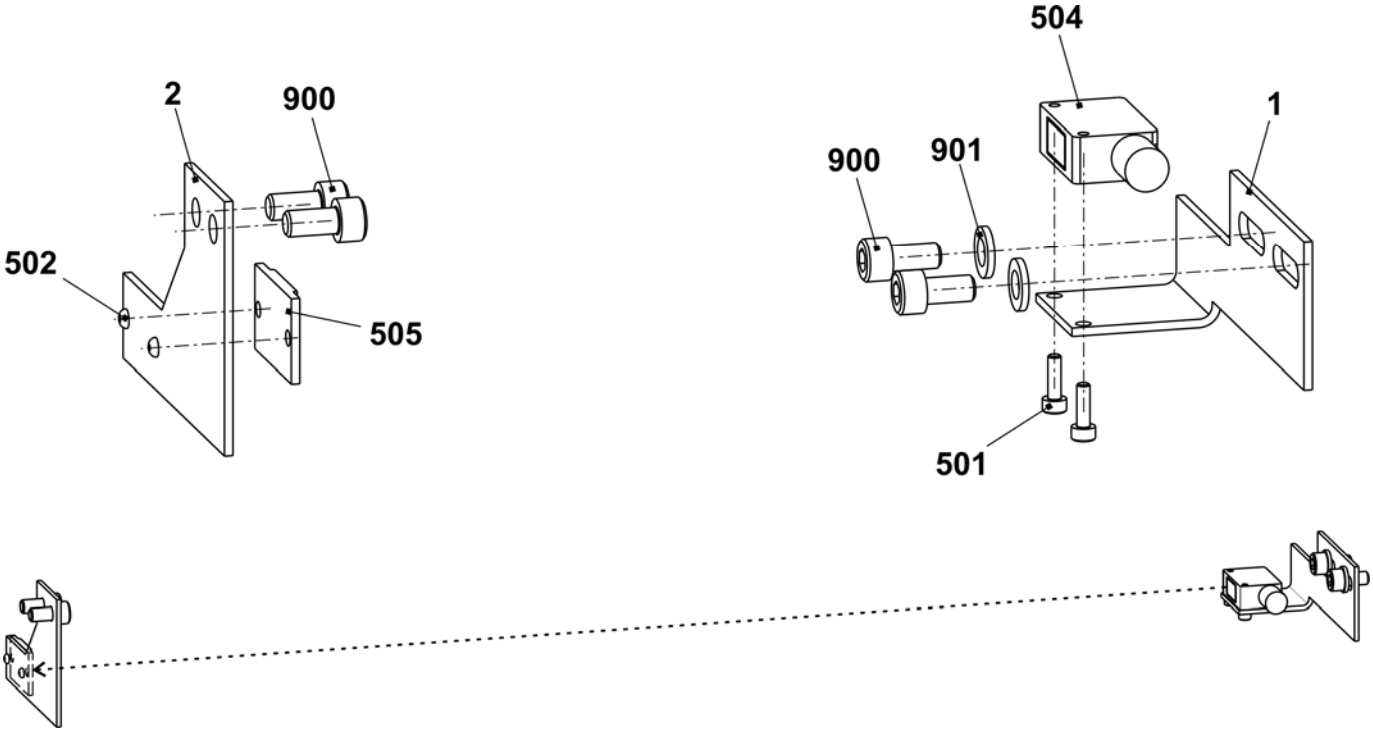

Shock stop motion E5-14

Pos	*Designation*	*ID*		*Pos*	*Designation*	*ID*
Σ	**Shock stop motion co. E5 - E14**	**223 947**		3	End plug piezo sensor	220 053
1	Shock stop motion (Piezo)	220 011		500	Countersunk screw M4x8	023 036
2	Connecting cable piezo sensor	220 061		502	Cable clip N-3B, 5 mm	210 729

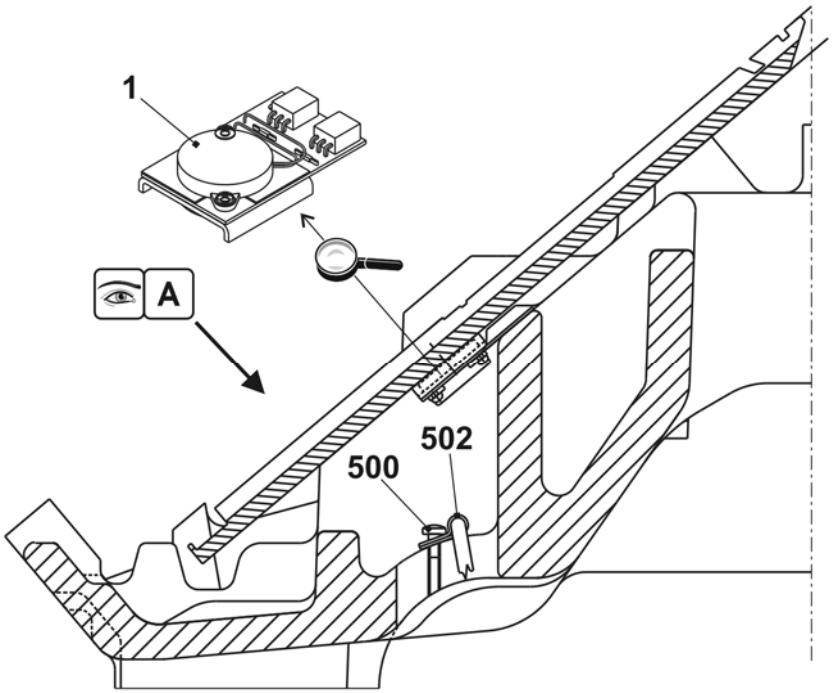

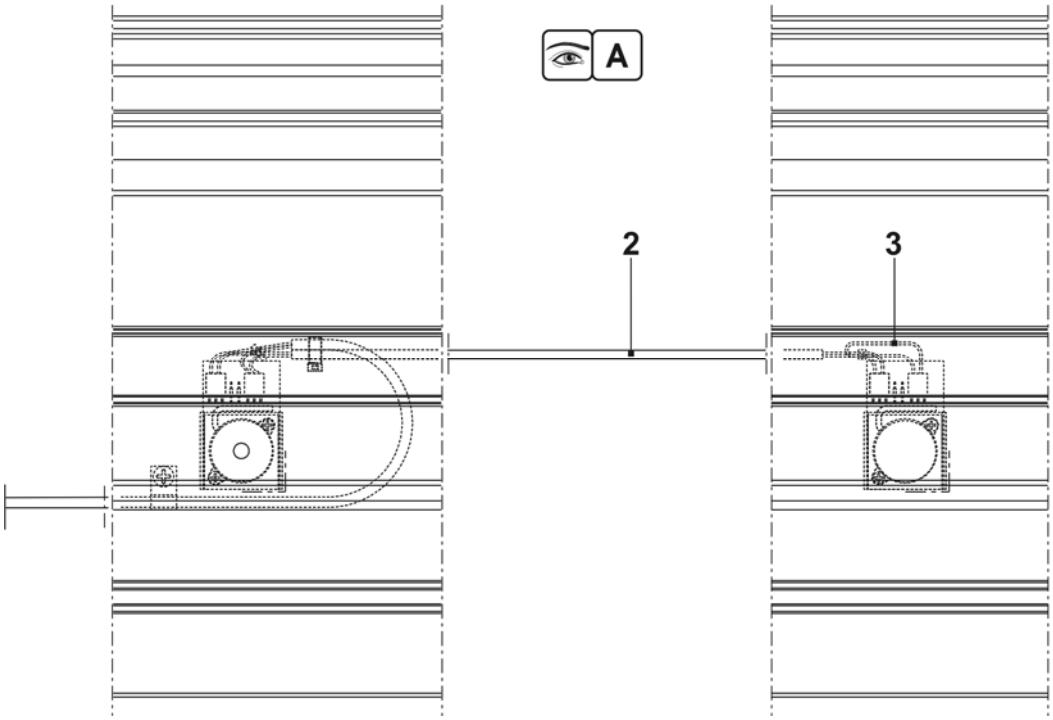

Shock stop motion E16-18

Pos	Designation	ID	Pos	Designation	ID
Σ	**Shock stop motion co. E16 – E18**	**250 386**			
1	Shock stop motion (Piezo)	220 011	4	Cable connection piezo	250 292
2	Cable connection piezo	250 293	500	Countersunk screw M4x8	023 036
3	End plug piezo sensor	220 053	502	Cable clip N-3B, 5 mm	210 729

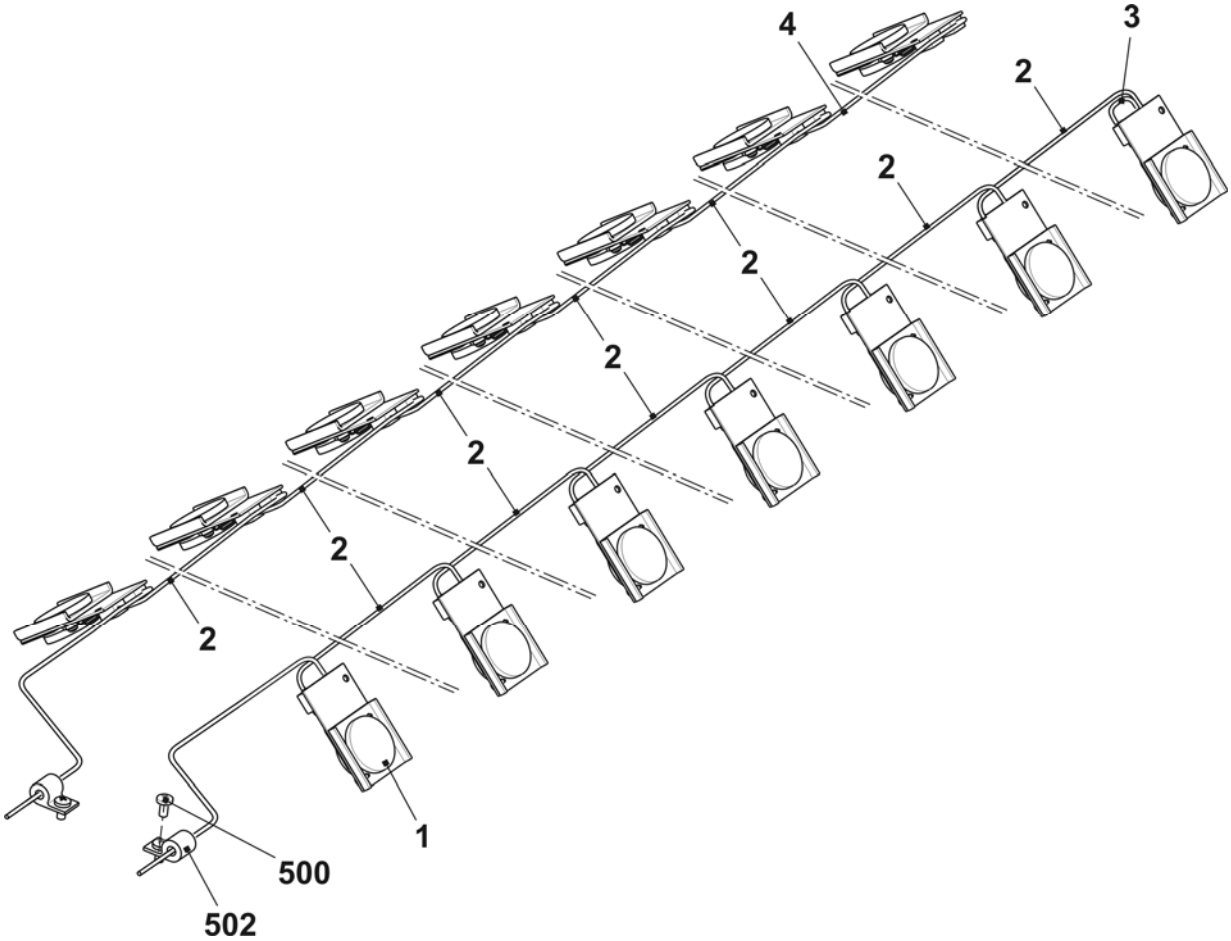

Measuring device

Pos	*Designation*	*ID*		*Pos*	*Designation*	*ID*
Σ	**Measuring device**					
1	Measuring bar	241 804		5*	Measuring head co.	240 562
2	Guidance	212 210		501	U-washer 6	020 881
4	Guidance	240 672		502	Countersunk screw M6x20	241 603

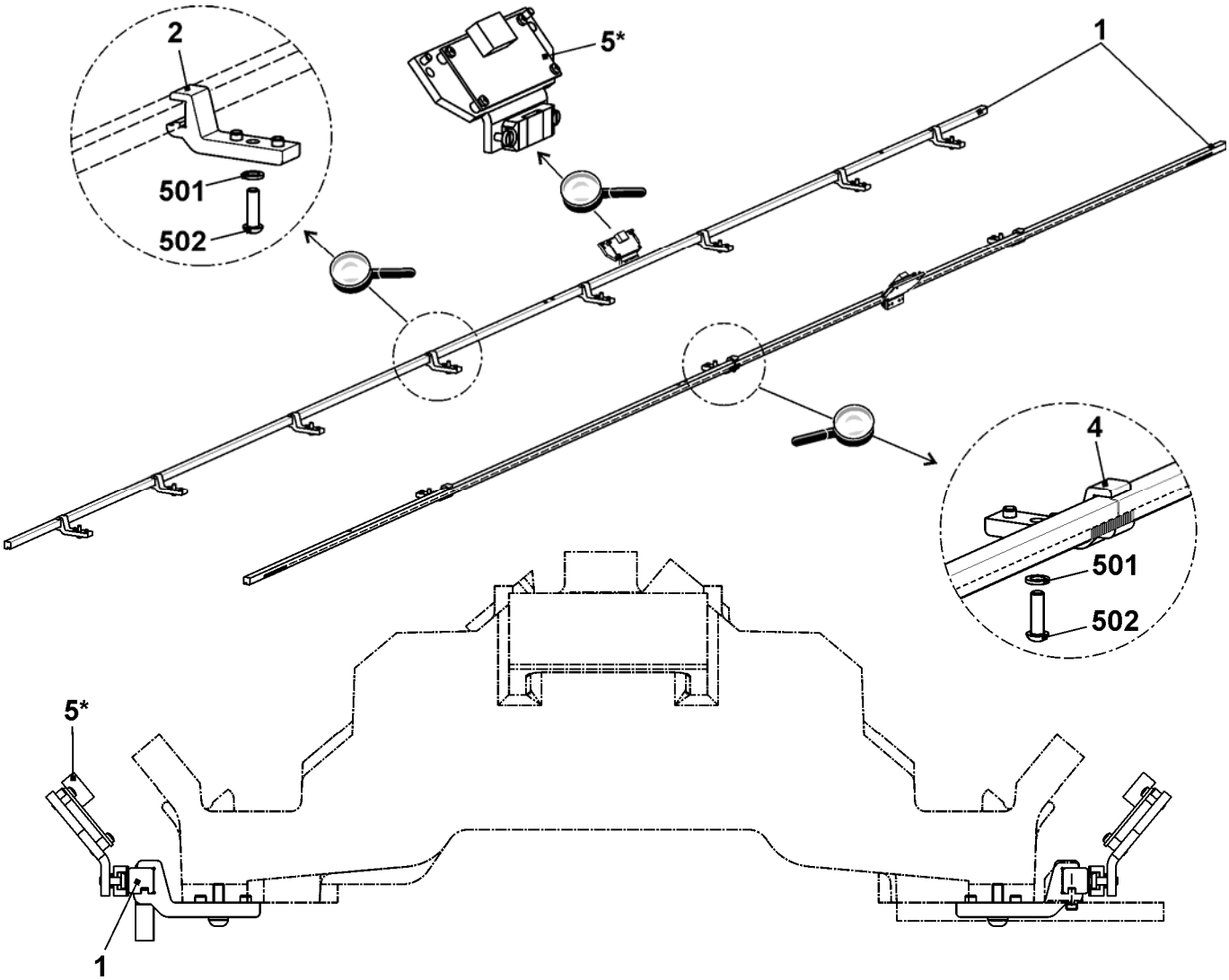

Protective units

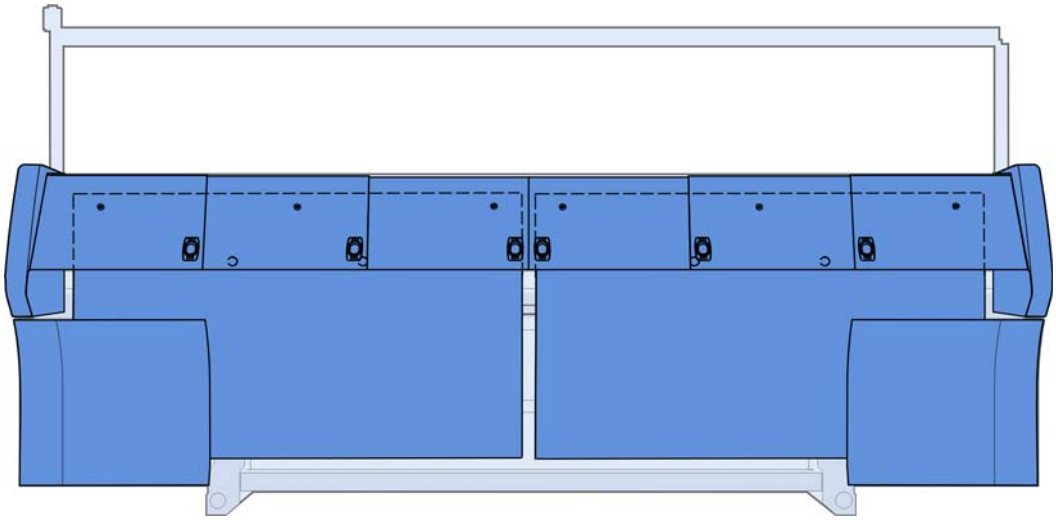

Lateral safety covers

Pos	*Designation*	*ID*		*Pos*	*Designation*	*ID*
Σ	**Safety cover on the left**			**Σ**	**Safety cover on the right**	
1	Safety cover on the left	250 562		1	Safety cover on the right	250 563
2	Hinge	241 994		2	Hinge	241 994
3	Plate	224 717		3	Plate	224 717
4	Locking plate	219 748		4	Locking plate	219 748
505	Screw KB 60x30	237 683		505	Screw KB 60x30	237 683
510	Screw KB 60x20	237 682		510	Screw KB 60x20	237 682

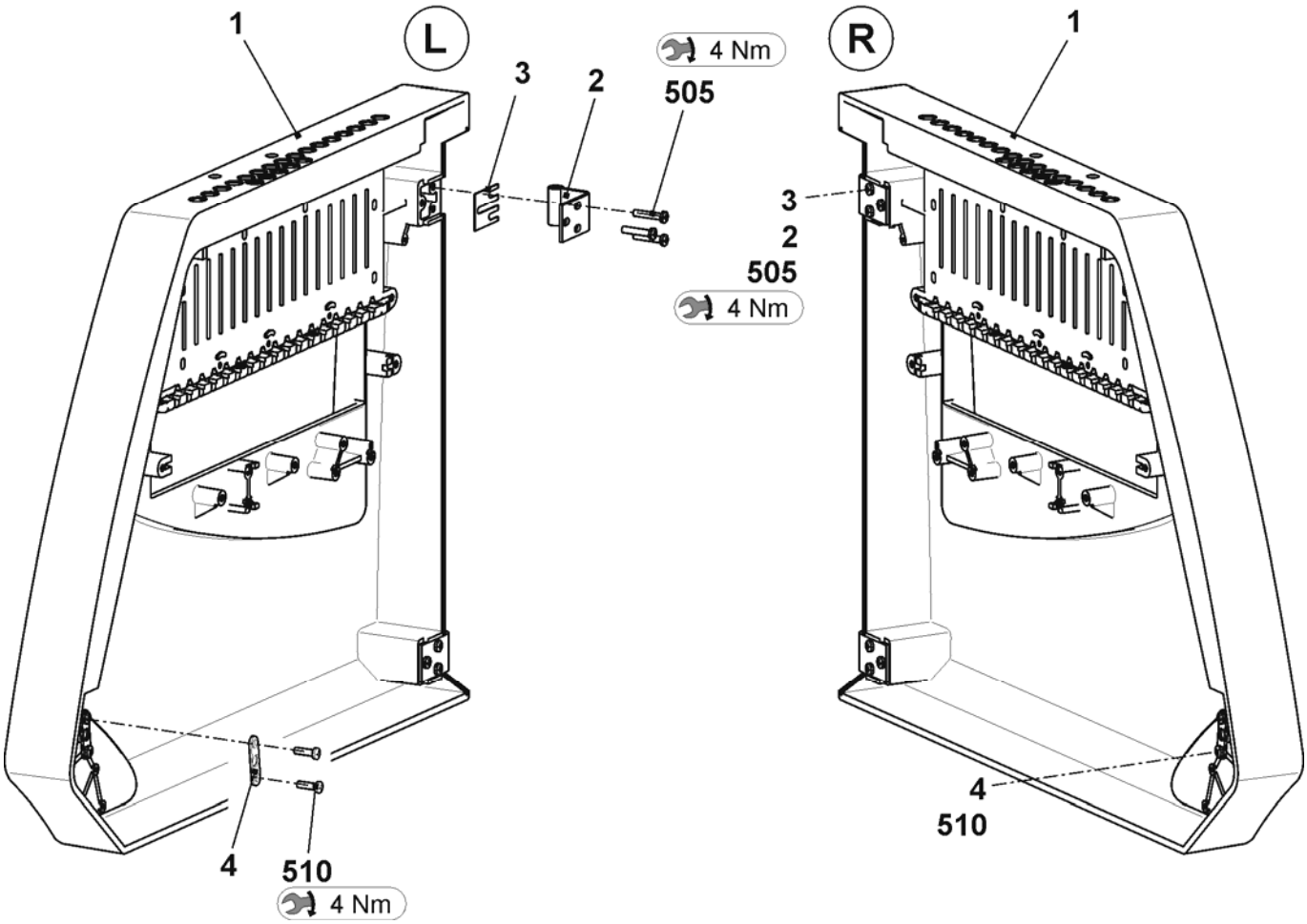

Panelling

Pos	Designation		ID	Pos	Designation		ID
1	Cover 1 (co.)		251 280	1-6	b	Inlet type handle	251 376
	1a	Cover 1	251 274		c	Stripper	219 393
2	Cover 2 (co.)		251 281		d	Magnet	255 129
	2a	Cover 2	251 275	7	Control unit panelling on the left co.		251 237
3	Cover 3 (co.)		251 282		7a	Control unit panelling on the left	251 190
	3a	Cover 3	251 276	8	Control unit panelling on the right co.		251 238
4	Cover 4 (co.)		251 283		8a	Control unit panelling on the right	251 191
	4a	Cover 4	251 277	7-8	x	Side part	244 989
5	Cover 5 (co.)		251 284		y	Hinge	250 273
	5a	Cover 5	251 278		z	Strap	240 412
6	Cover 6 (co.)		251 285		500	Screw KB 50x12	240 359
	6a	Cover 6	251 279		501	Cap screw M6x16	020 135

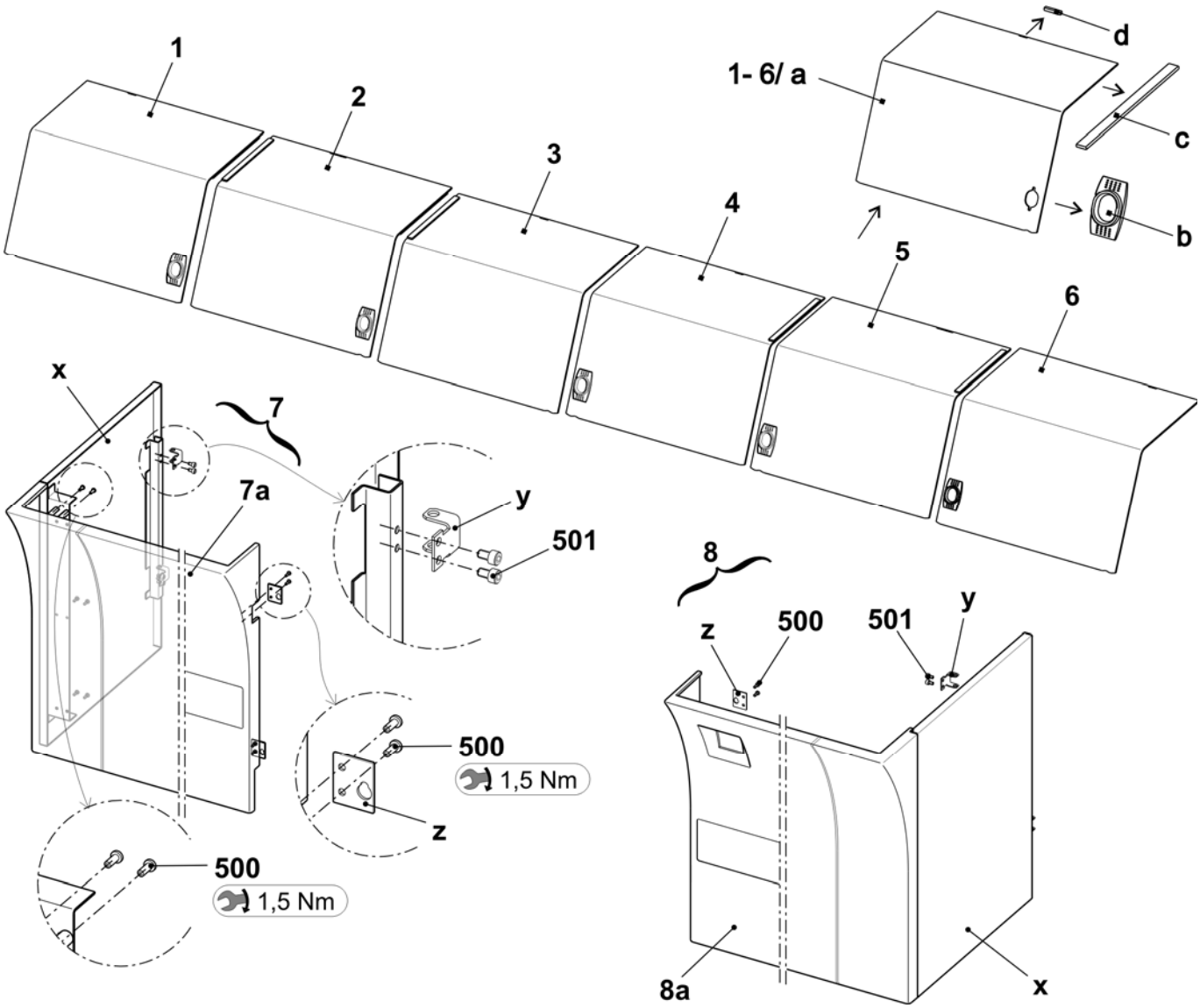

Rear panel

Pos	*Designation*	*ID*		*Pos*	*Designation*	*ID*
1	**Panelling at the rear co.**	**251 571**		11	Panelling	251 570
				12	Safety sash fastener	243 052

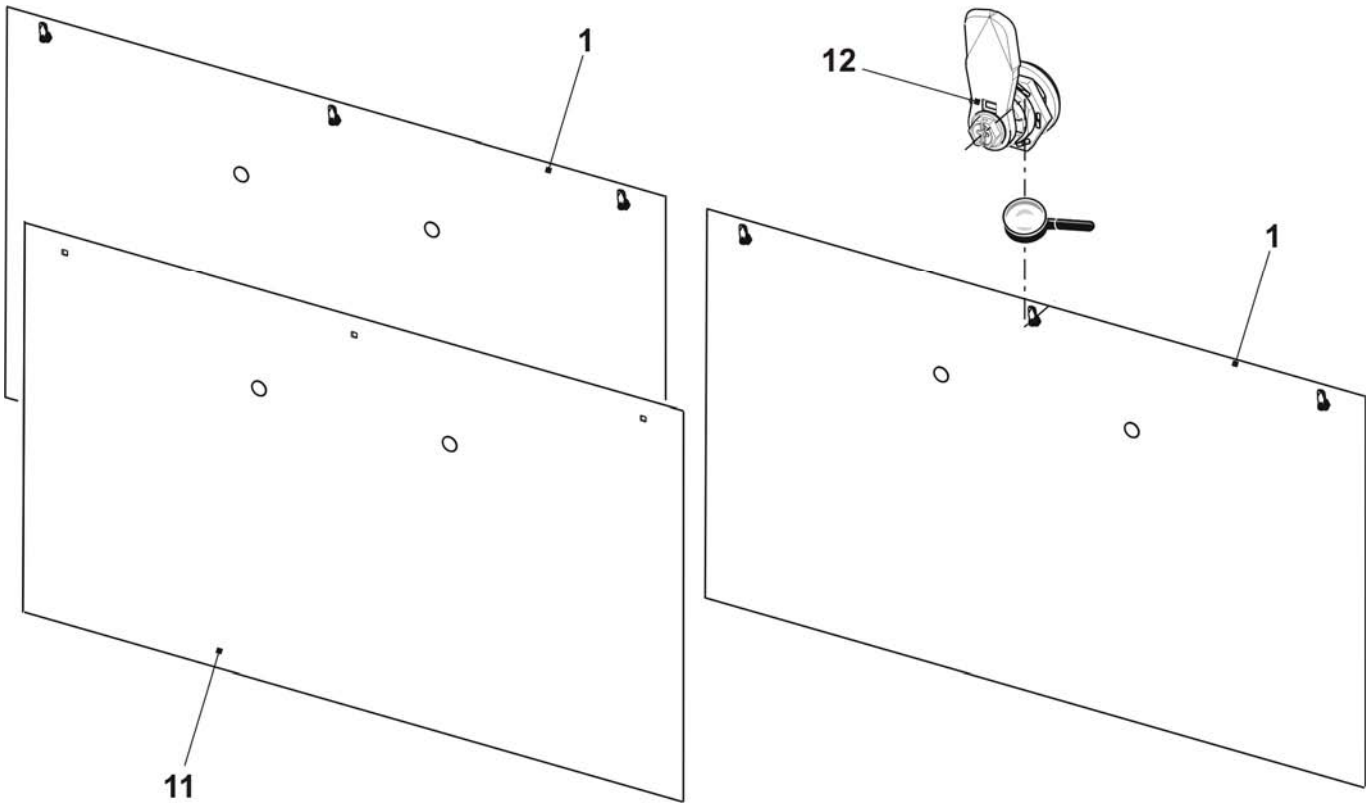

Electrical equipment

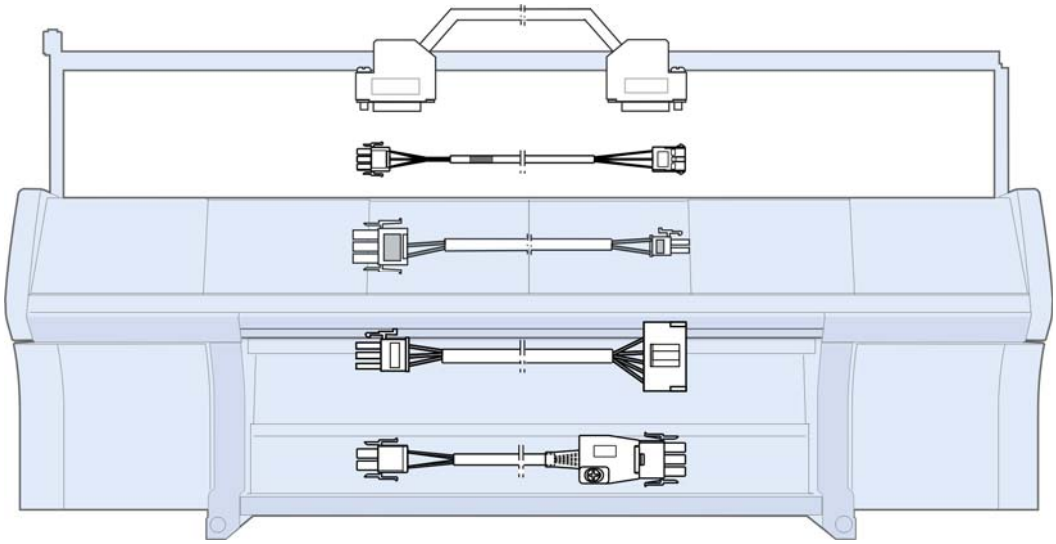

Fuses

Designation		*ID*
	Fuse 1.0A F 5x20	008 748
	Fuse 3.15A T/440V 6.3x32	025 261
	Fuse 10A T/440V 6.3x32	025 258
	Fuse 2.5A T/440V 6.3x32	217 465
	Fuse 1.6A T/440V 6.3x32	236 229
	Fuse 6.3A T/440V 6.3x32	026 809
	Fuse 8A T/440V 6.3x32	241 866
	Fuse 12.5A T/440V 6.3x32	232 367

Circuit diagram (219) as PDF

Designation	*ID*	*Identification*
Circuit diagram 219 German	243 991	_DE
Circuit diagram 219 English	243 991	_GB
Circuit diagram 219 Chinese	243 991	_CN

You will find the circuit diagram 219 on the CMS documentation DVD with the identification number 253 132

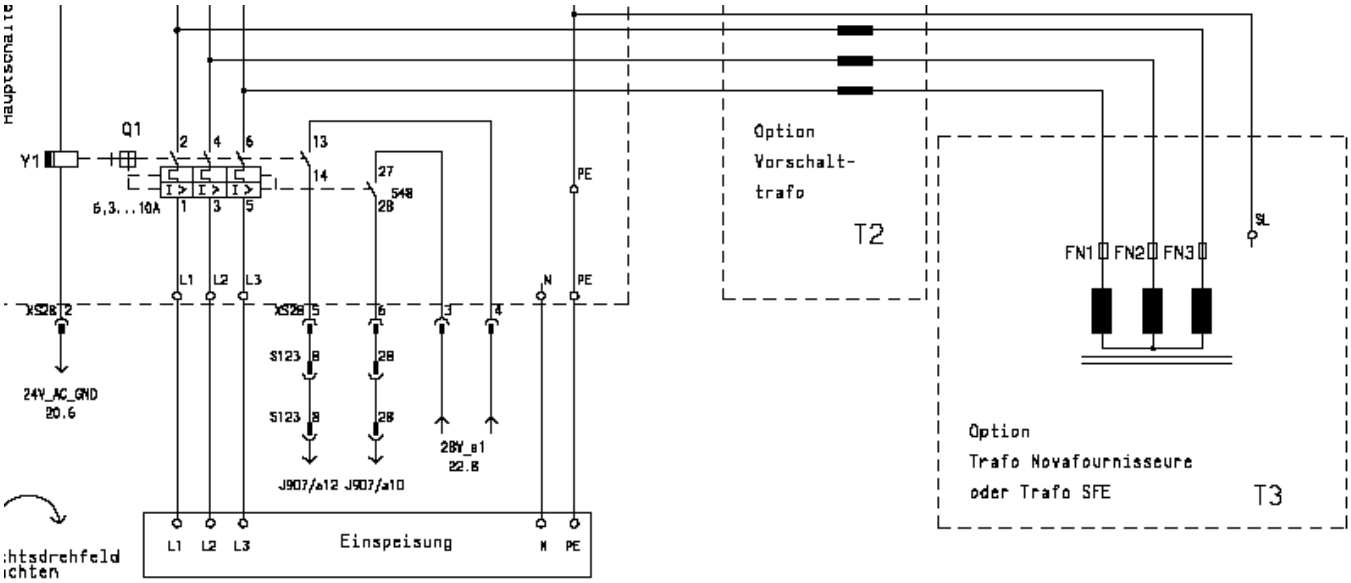

Trailing cable

Designation	*ID*
Cable impulse giver at the rear on the right XL136	242 285
Cable impulse giver at the front on the right XL137	242 286
Cable impulse giver at the rear o the left XL138	242 287
Cable impulse giver at the front on the left XL139	242 288

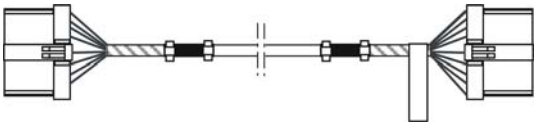

Cable yarn carrier on the left	242 289
Cable yarn carrier on the right	242 290

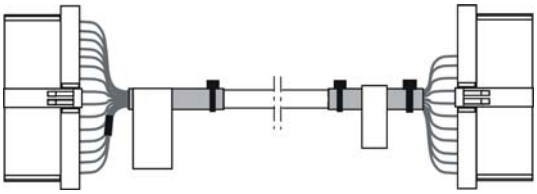

Designation	*ID*
Cable SM rear left XL321	242 291
Cable SM front left XL323	242 293
Cable SM rear right XL325	242 295
Cable SM front right XL327	242 297

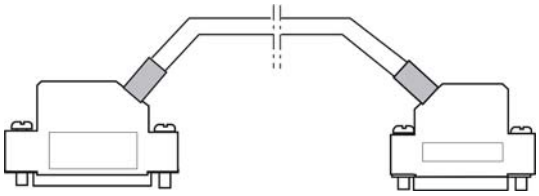

Cable signal at the rear on the left XL322	242 292
Cable signal front left XL324	242 294
Cable signal at the rear on the right XL326	242 296
Cable signal front right XL328	242 298

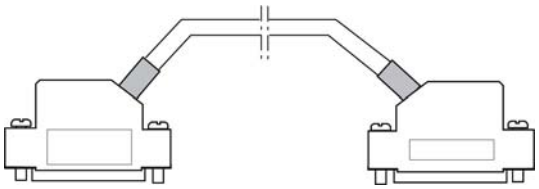

Cable

Designation	ID	Designation	ID
Cable engaging OKC	240 289	Cable mains supply FKE lamp OKC	240 290
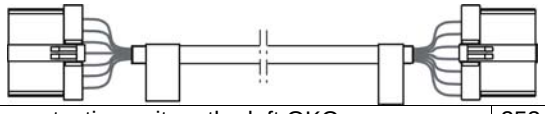		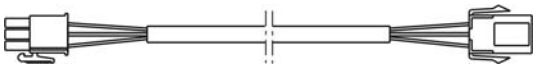	
Cable protective unit on the left OKC	253 442	Cable motor HIAB OKC	240 291
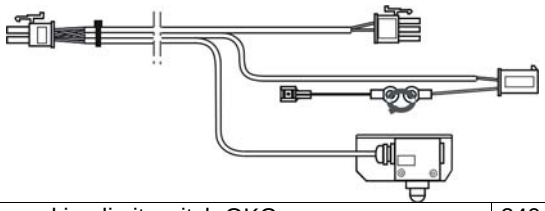			
Cable racking limit switch OKC	240 292	Cable ventilator drive OKC	240 293
		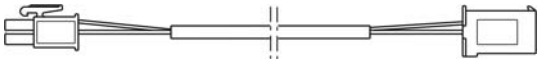	
Cable feed wheel on the right OKC	240 294	Cable drive motor OKC	240 295
Cable feed wheel on the left 84“ OKC	240 466	Cable racking motor OKC	240 297
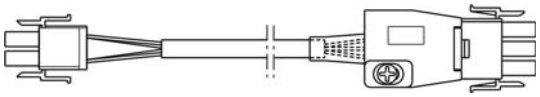		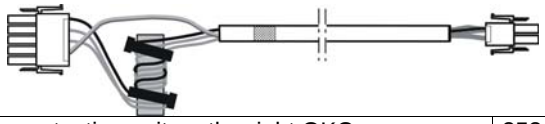	
Cable resolver drive OKC	240 296	Cable protective unit on the right OKC	253 441
Cable resolver racking OKC	240 298	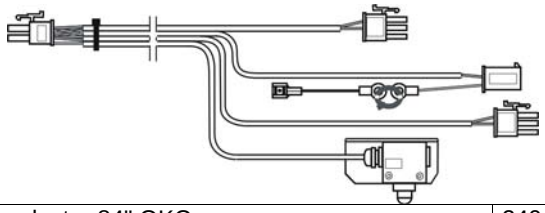	
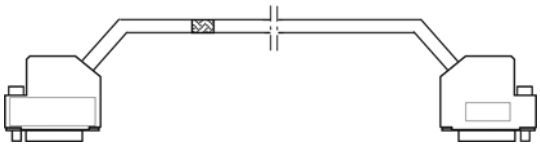			
Cable CAN 84“	240 461	Cable electro 84" OKC	240 463
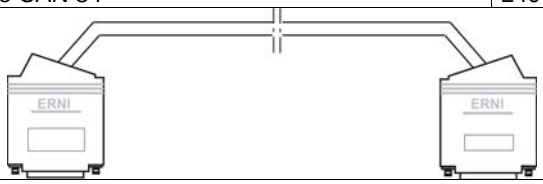			

Continuation I of cable

Designation	*ID*	*Designation*	*ID*
Cable motor HIAB 84“ OKC	242 226	Cable switch HIAB 84“ OKC	242 227
Cable power supply WAZ/F 84“ OKC	240 471	Cable power supply Servo 84“	240 504
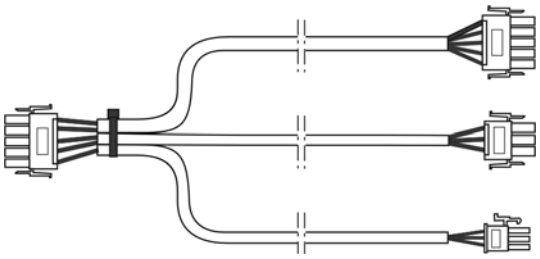		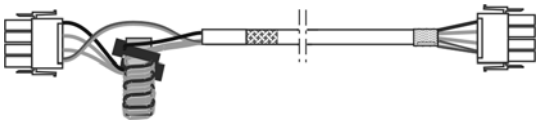	
Cable power supply of mains supply OKC	240 505	Cable power supply lighting 84“ OKC	240 507
Cable motor HAAB OEF/S 84“	242 228	Cable switch HAOS 84“ OKC	242 229
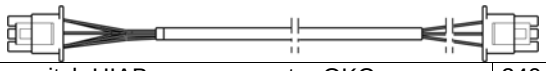			
Cable switch HIAB pressure motor OKC	240 593	Cable HIAB pressure motor OKC	240 592
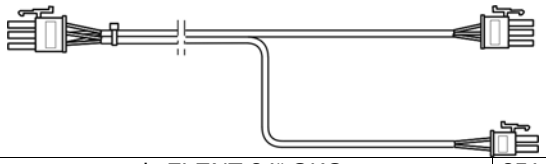		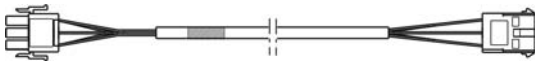	
Cable power supply FLENT 84“ OKC	251 243	Cable motor comb hook OKC	240 308
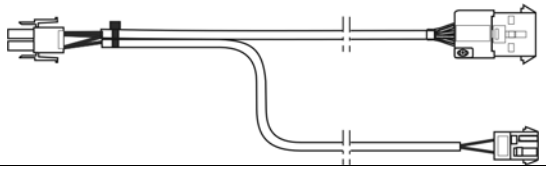		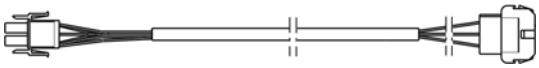	

Continuation II of cable

Designation	*ID*		*Designation*	*ID*
Cable switch KAHA OKC	240 309		Cable motor comb OKC	240 310
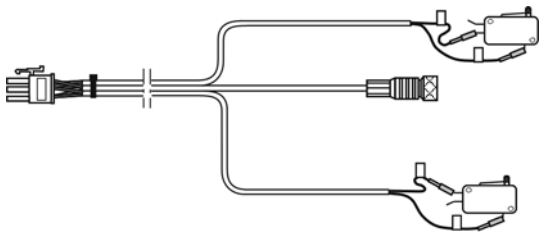			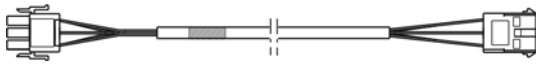	
Cable switch comb OKC	240 311		Cable switch HAAB OKC	240 312
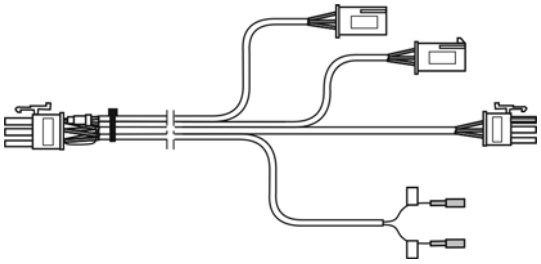			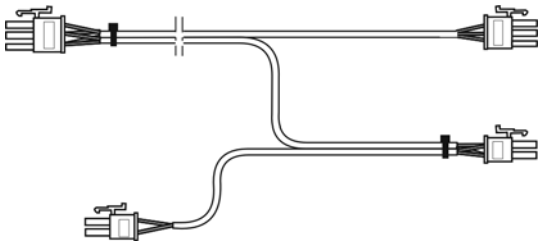	
Cable Piezo NB OKC	240 518			
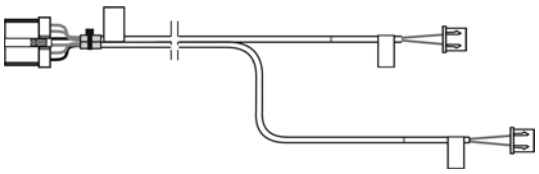				

Control electronics

Left control cabinet

Pos	Designation	ID		Pos	Designation	ID
Σ	**Control unit on the left co. OKC**	**250 435**				
1	Control unit on the left without equipment	250 434		5	Card SM-CPU 2	300 946
2	Battery plug-in unit	300 924		6	Card amplifier 4SM 7TE	300 943
3	Power supply CG54	300 923		7	Card N-CPU 432	300 965
	31 Ventilator power supply	239 305		8	Card power CPU1	300 966
	32 Filter mat CG54	239 350		9	Card IPC P8C OKC	300 976
4	Card battery OKC	300 951		10	Adhesive label of card equipment at the left	242 310

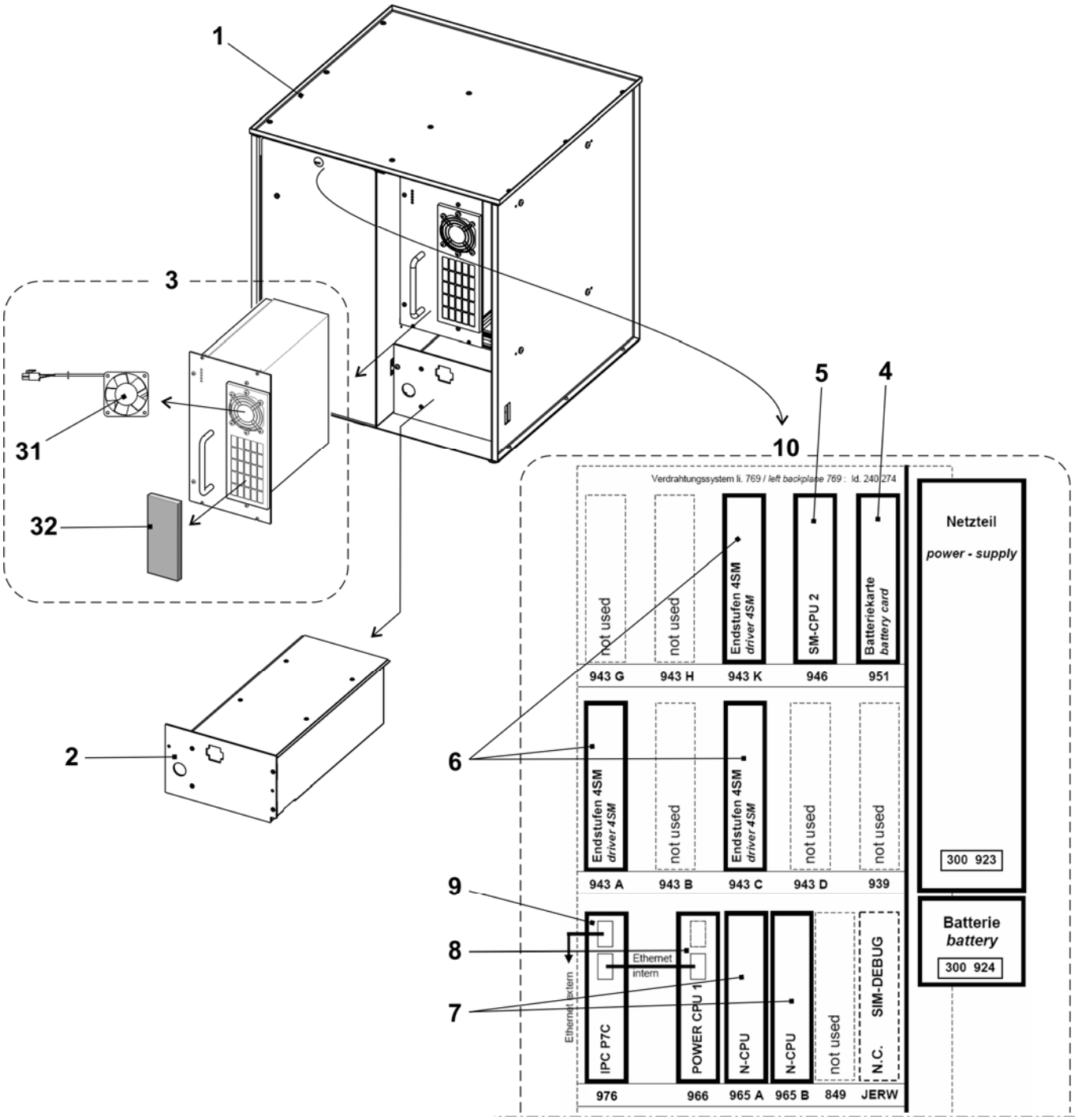

Right control cabinet

Pos	Designation	ID		Pos	Designation	ID
Σ	**Control unit on the right co. OKC**	**238 738**				
1	Control unit on the right without equipment	238 737		3	Card relay OKC	300 953
1a	Axial fan Servo 5	229 059		4	Card CWAZ	300 929
2	Card servo 6	301 000		5	Card CWAZ capacitor	300 936

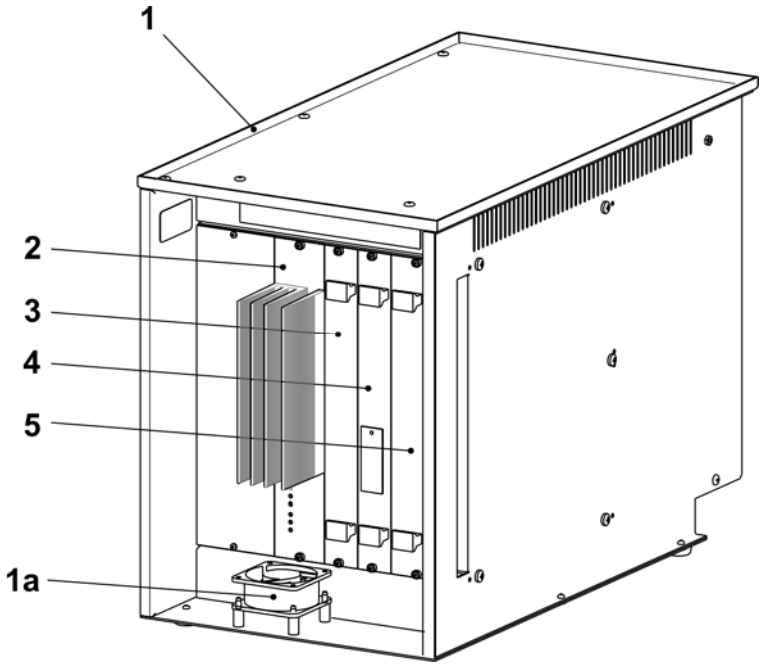

Deliverable accessories

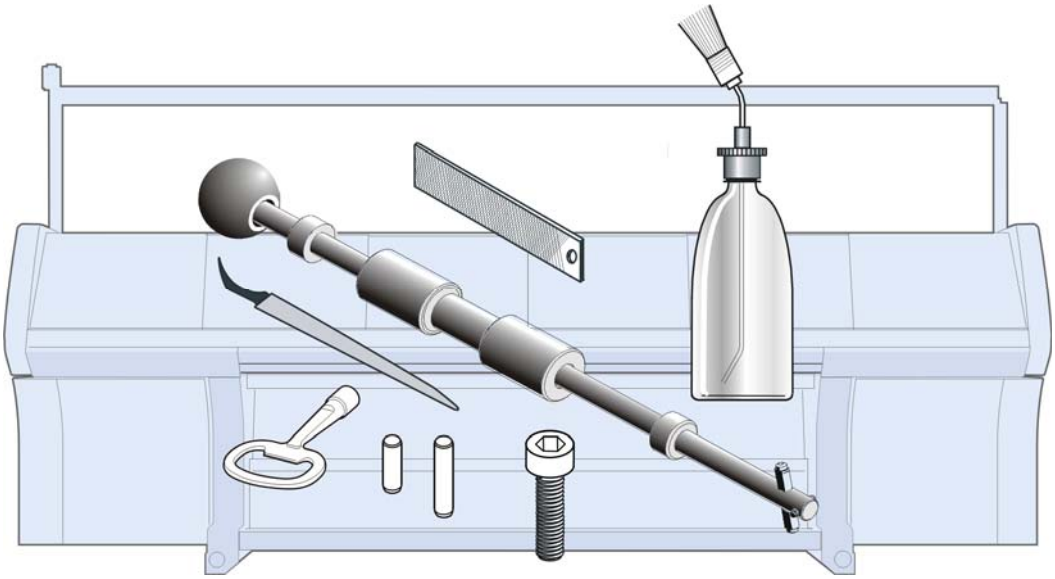

Fuses

	Designation	*ID*
	Visible type fuse F1.0 A	008 748
	Fuse 3.15 A T/440V 6.3x3.2	025 261
	Fuse 10 A T/440V 6.3x3.2	025 258
	Fuse 2.5 A T/440V 6.3x3.2	217 465
	Fuse 1.6 A T/440V 6.3x3.2	236 229
	Fuse 6.3 A T/440V 6.3x3.2	026 809
	Fuse 8 A T/440V 6.3x3.2	241 866
	Fuse 12.5 A TT 6.3x3.2	232 367

Tool

Pos	Designation		ID	Pos	Designation	ID
1	Channel support E4		062 309	6	Groove file 1.33 mm E3-4	006 169
	Channel support E5, E2,5.2		062 310		Groove file 1.25 mm E5-8, E3,5.2	006 170
	Channel support E7, E3,5.2		062 312		Groove file 0.90 mm E10-12, E5.2 + 6.2	006 175
	Channel support E8		062 313		Groove file 0.73 mm E14, E7.2	006 173
	Channel support E10, E5.2		062 314		Groove file 0.45 mm E16-18, E9.2	006 179
	Channel support E12, E6.2		062 315	7	Key of switch cabinet	009 346
	Channel support E14, E7.2		218 069	8	Groove cleaner E4	031 232
	Channel support E16, E8.2		230 188		Groove cleaner E5	031 233
	Channel support E18, E9.2		230 189		Groove cleaner E6	031 234
	Channel support E20		230 190		Groove cleaner E7, E3,5.2	031 235
2	Channel chisel E14-20 (E5-14)		062 316		Groove cleaner E8	031 236
	Channel chisel E4-8 (E3,5.2)		062 317		Groove cleaner E10 (E5.2)	031 238
	Channel chisel E10-14		062 318		Groove cleaner E12 (E6.2)	031 240
3	Yarn guide on the left		227 071		Groove cleaner E14 (E7.2)	031 242
	Yarn guide on the right		227 070		Groove cleaner E16	225 111
4	Working hook		227 249		Groove cleaner E18 (E9.2)	225 112
5	Extraction hook		232 027		Groove cleaner E20	225 113
	5a	Small pin	202 843	9	Measuring tape L=150 cm	228 180
	5b	Pin	232 022	10	Tool kit	209 527

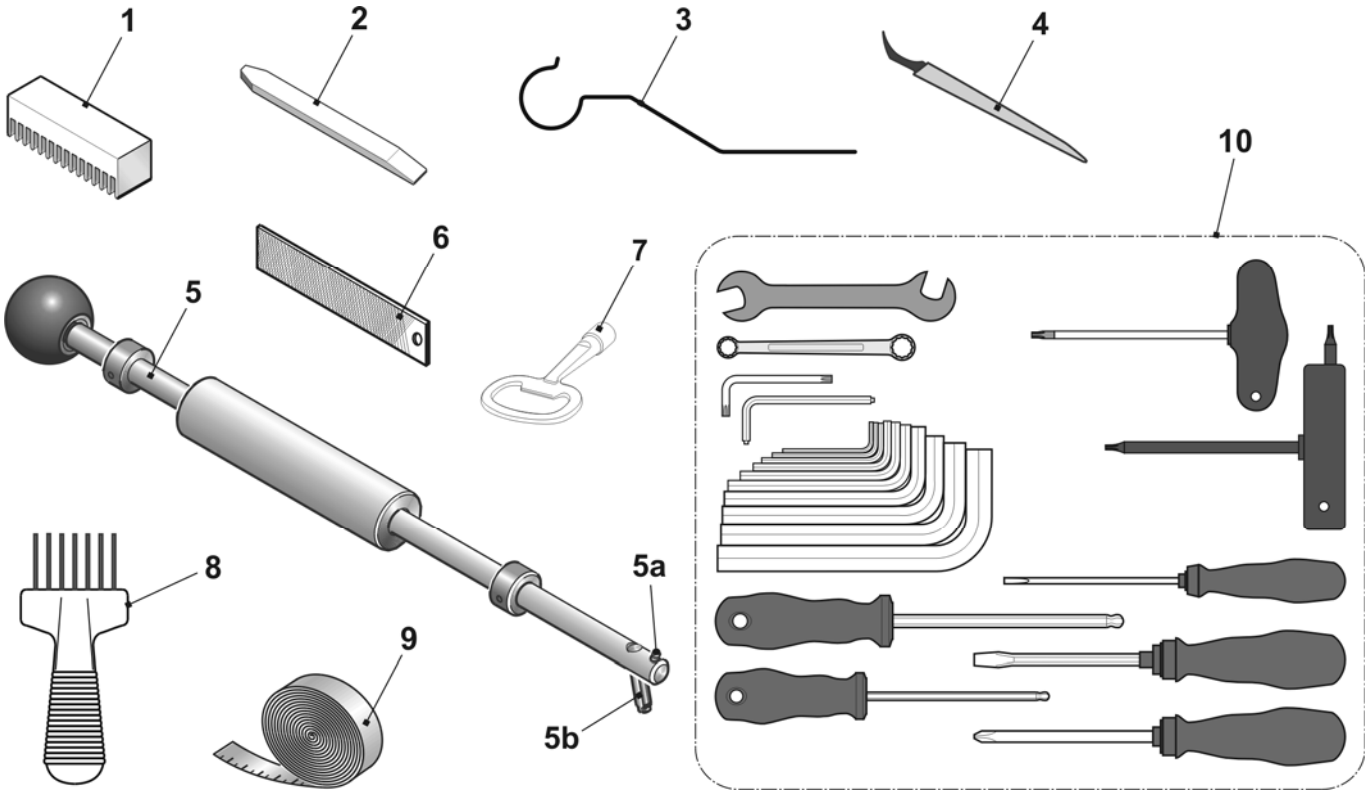

Lubricating stuff

Pos	*Designation*	*ID*		*Pos*	*Designation*	*ID*
1	Textile machines oil T46, 1l	230 614		4	Ölkombifix	216 732
2	Grease OKS 475, 1kg	009 200		5	White grease paste OKS270	229 372
3	Grease OKS 475, 150g	005 351		6	Grease Staburags NBU 12/300KP	231 191

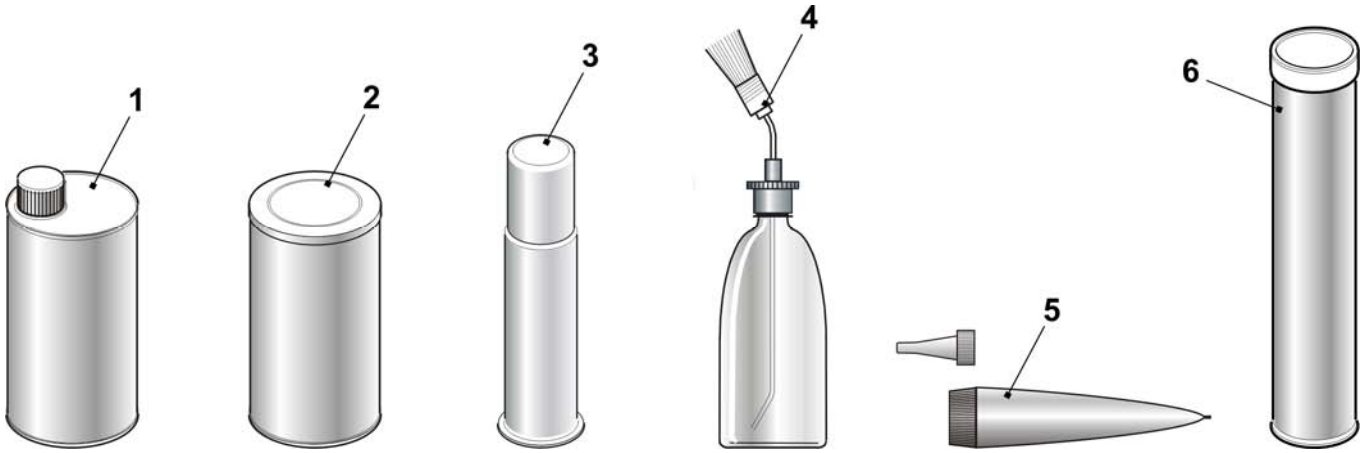

Mechanical parts

Pos	Designation	ID	Pos	Designation	ID
1	Cap screw M4x8	020 091	11	Cable binder 203x3.6 mm	025 815
2	Countersunk screw M3x6	020 286		Cable binder T50L	026 294
3	Cap screw M5x16	022 726		Cable binder 140x3.6mm	008 379
4	Cap screw M6x14	022 658		Cable binder 302x4.8 mm	008 642
5	Set screw M16x50	023 235		Cable binder 92x2.4mm	008 378
6	Setting pin 3x7	020 643	12	Reusable tie ABV 232 320 mm	026 557
7	Setting pin 3x10	020 645			
8	Setting pin 3x12	020 647			
9	Setting pin 5x12	021 988			
10	Setting pin 5x18	022 622			

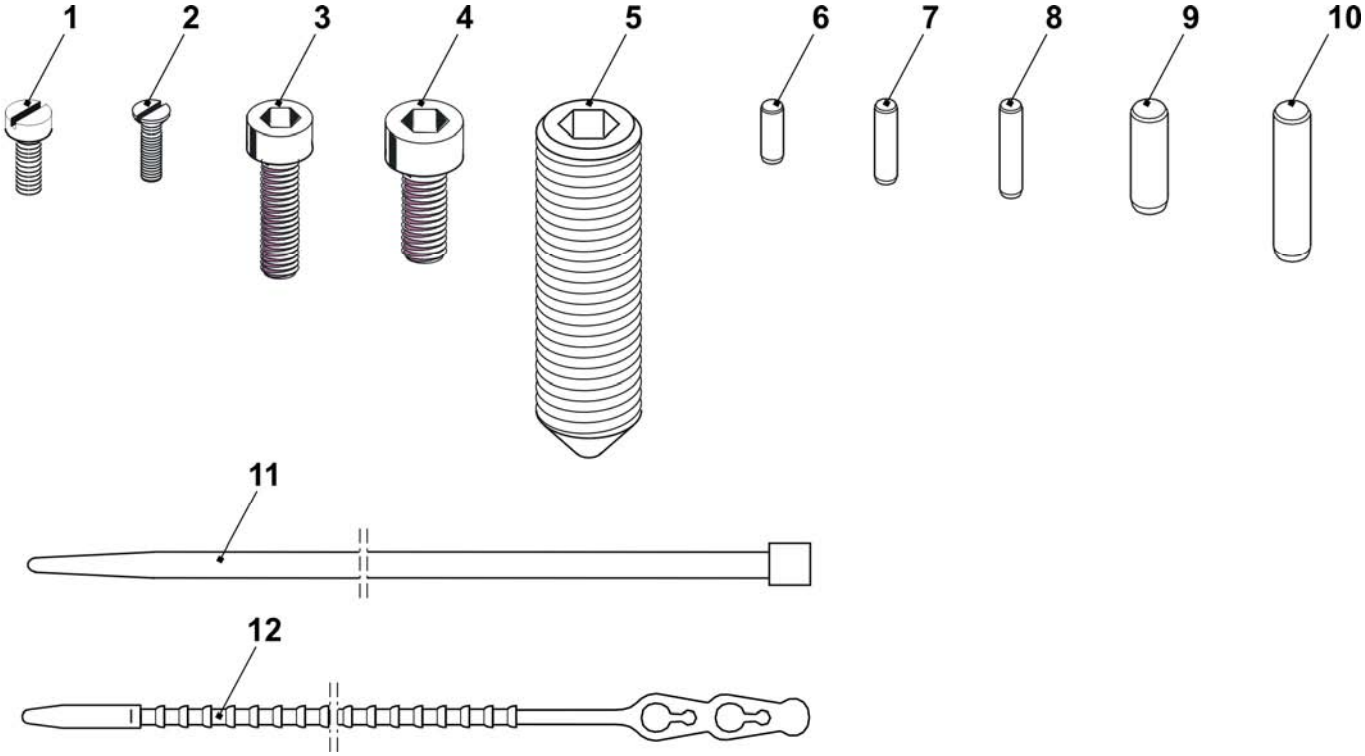

Special equipment

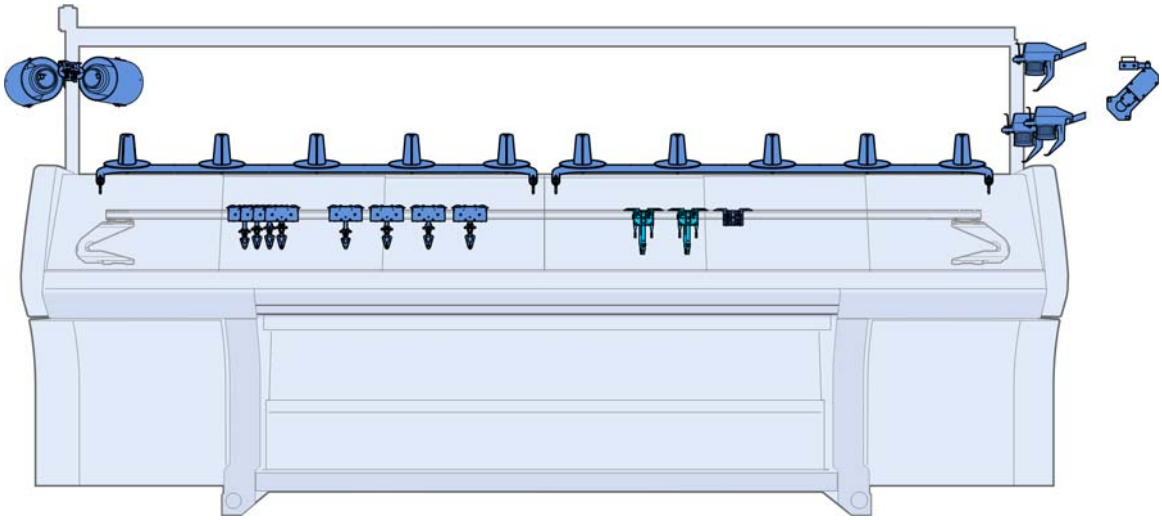

Co. intarsia yarn carriers

Designation	Gauge	Track	Pos	ID	Designation	Gauge	Track	Pos	ID
Intarsia yc carriage co.	E5 E2,5.2 E3,5.2 E5.2	1 + 8	1	212 974	Intarsia yc carriage co.	E14 E8.2	1 + 8	1	214 146
		2 + 7	2	212 977			2 + 7	2	214 147
		3 + 6	3	212 980			3 + 6	3	214 148
		4 + 5	4	212 983			4 + 5	4	214 149
	E7 - E8 E6.2	1 + 8	1	212 975		E16 - E18	1 + 8	1	227 126
		2 + 7	2	212 978			2 + 7	2	227 127
		3 + 6	3	212 981			3 + 6	3	227 128
		4 + 5	4	212 984			4 + 5	4	227 129
	E10 - E12 E6.2(12) E7.2 E9.2	1 + 8	1	212 976					
		2 + 7	2	212 979					
		3 + 6	3	212 982					
		4 + 5	4	212 985					

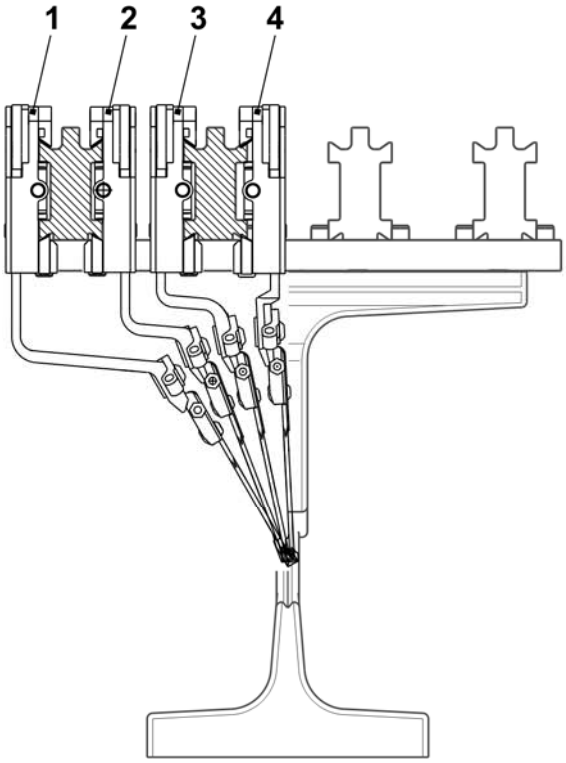

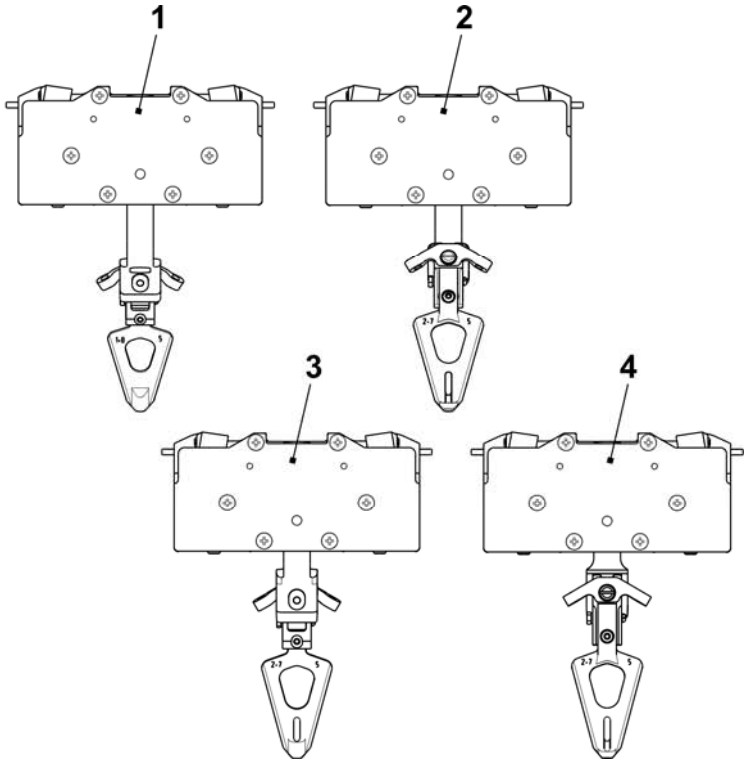

Carriage IYC

Pos	Designation	ID	Pos	Designation	ID
1	Basic plate co.	216 031			
	20 Threaded bolt	213 399	14	Pressure plate 2.04	201 654
2	Slider co.	217 170		Pressure plate 2.06	208 924
3	Locking plunger	212 508		Pressure plate 2.02	235 740
4	Sliding block	213 807	16	Spring pin	201 677
7	Locating pin 3.3	212 504	17	Lifter	212 547
	Locating pin 3.4	212 505	18	Sliding part	212 543
	Locating pin 3.5	212 506	20	Threaded bolt	213 399
9	Thrust piece	212 773	500	Countersunk head screw M4x6	022 994
10	Pressure roller	212 774	502	Countersunk head screw M4x12.5	022 979
11	Cover	212 507	505	Compression spring 0.4x3.2x26.5	022 982
12	Clamping lever on the right	216 087	506	Compression spring 4.0x0.7x25	022 969
13	Clamping lever on the left	216 0 88	508	Compression spring 2.8x0.35x19	023 394

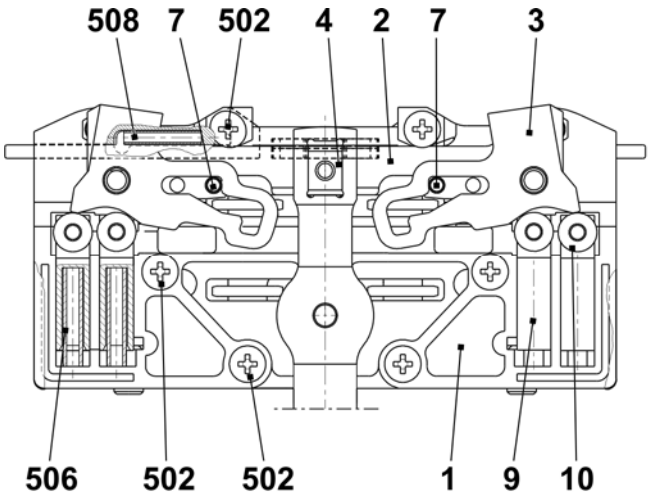

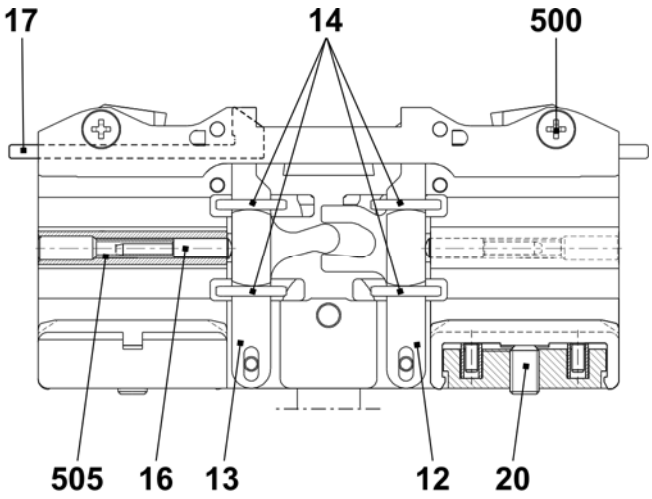

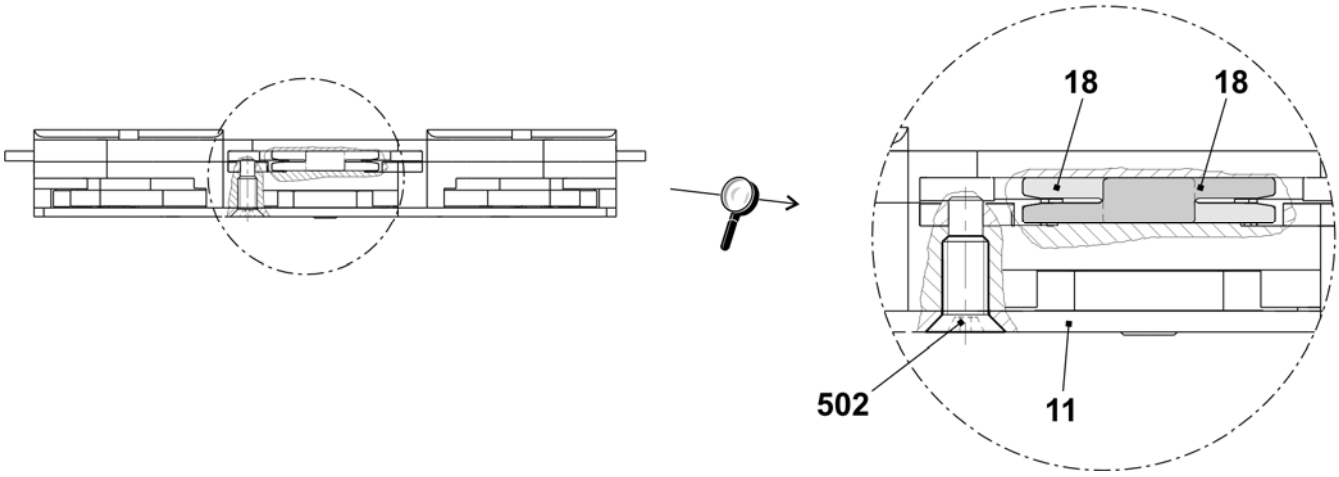

Bow and head IYC

Pos	Designation	ID	Pos	Designation	ID
1	YC bow 1+8	212 986	7	Yarn guide angle	201 672
2	YC bow 2+7	212 987	500	Countersunk screw M4x8	023 579
3	YC bow 3+6	212 988	501	Circlip S4-FST	022 774
4	YC bow 4+5	212 989			

Pos	Designation	Gauge	Track	ID	Pos	Designation	Gauge	Track	ID
5	YC head	E5, E5.2 E2,5.2 E3,5.2	1 + 8	208 579	6	YC head	E5, E5.2 E2,5.2 E3,5.2	2 + 7 3 + 6 4 + 5	208 581
		E7 - E8 E6.2		208 580			E7 - E8 E6.2		208 582
		E10 - E12 E6.2(12) E7.2 E9.2		209 700			E10 - E12 E6.2(12) E7.2 E9.2		209 701
		E14 E8.2		213 864			E14 E8.2		213 865
		E16 - E18		227 109			E16 - E18		227 113

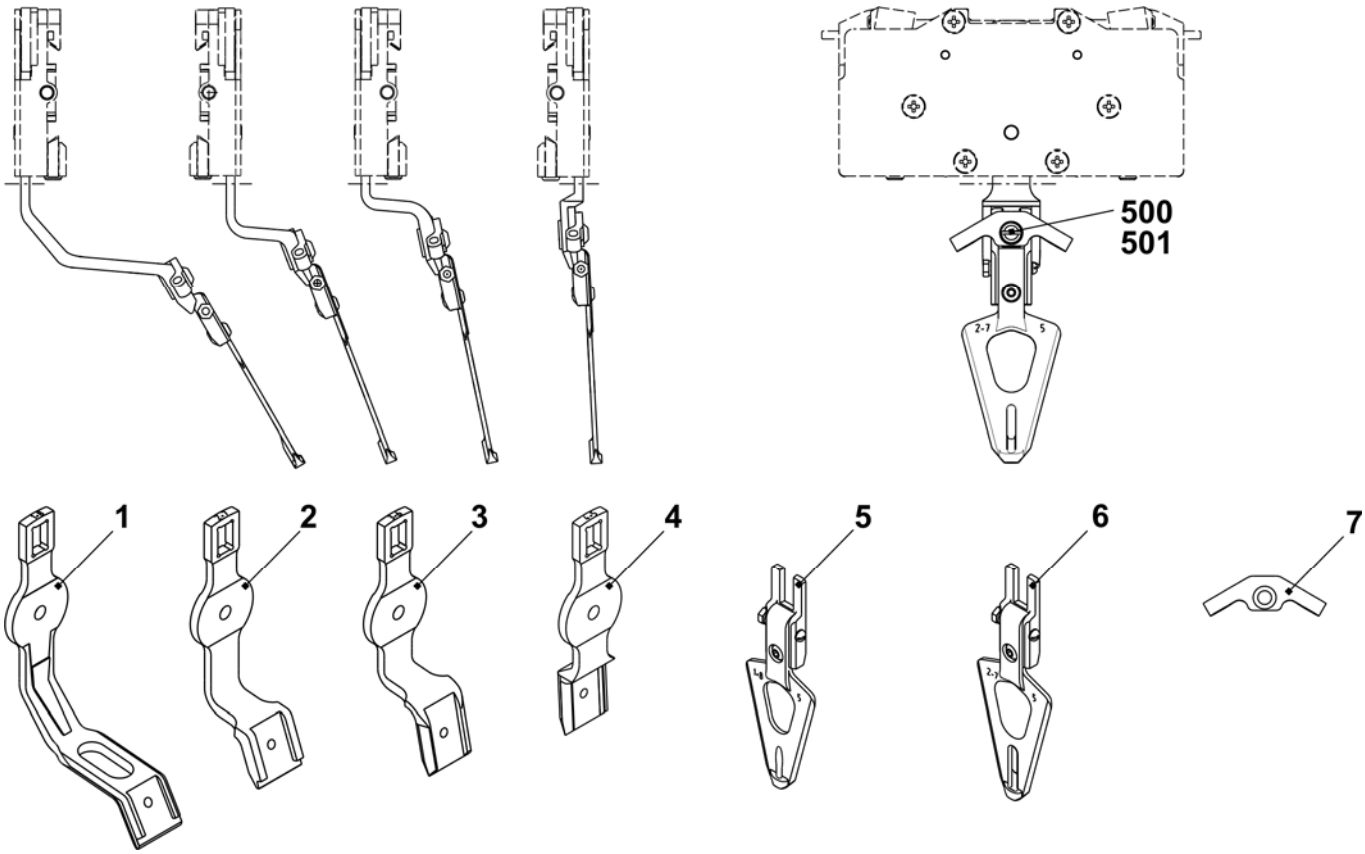

Plating yarn carrier 3+6

Pos	Designation	ID		Pos	Designation	ID
Σ	**Plating yarn carrier carriage 3+6 co.**					
	E5 + E2,5.2 + E3,5.2 + E5.2	**252 782**		6	Sliding part	252 797
	E7 + E8 + E6.2	**252 784**		7	Eyelet holder co.	252 825
	E10 + E12 + E14 + E7.2 + E8.2	**252 786**		8	Eyelet holder co.	252 824
	E16 + E18 + E9.2	**252 788**		9	Spacer	252 796
1	Plating yarn carrier carriage	252 806		10	Shim	213 035
2	Sliding part	212 583		11	Shim	216 143
3	Slider	252 798		12	Adjusting screw	253 436
4	Plating yarn carrier bow 3+6			500	Hexagon screw M4x5	243 779
	E5	252 820		501	Hexagon screw M4x10	020 346
	E7-8	252 821		502	Hexagon screw	252 832
	E10-14	252 822		503	Grub screw M4x16	254 196
	E16-18	252 823		504	Compression spring	021 399
5	Plating yarn carrier bow 3+6 E5-8	252 800		505	Threaded bolt	213 399
	Plating yarn carrier bow 3+6 E10-18	252 808		506	Compression spring	253 058

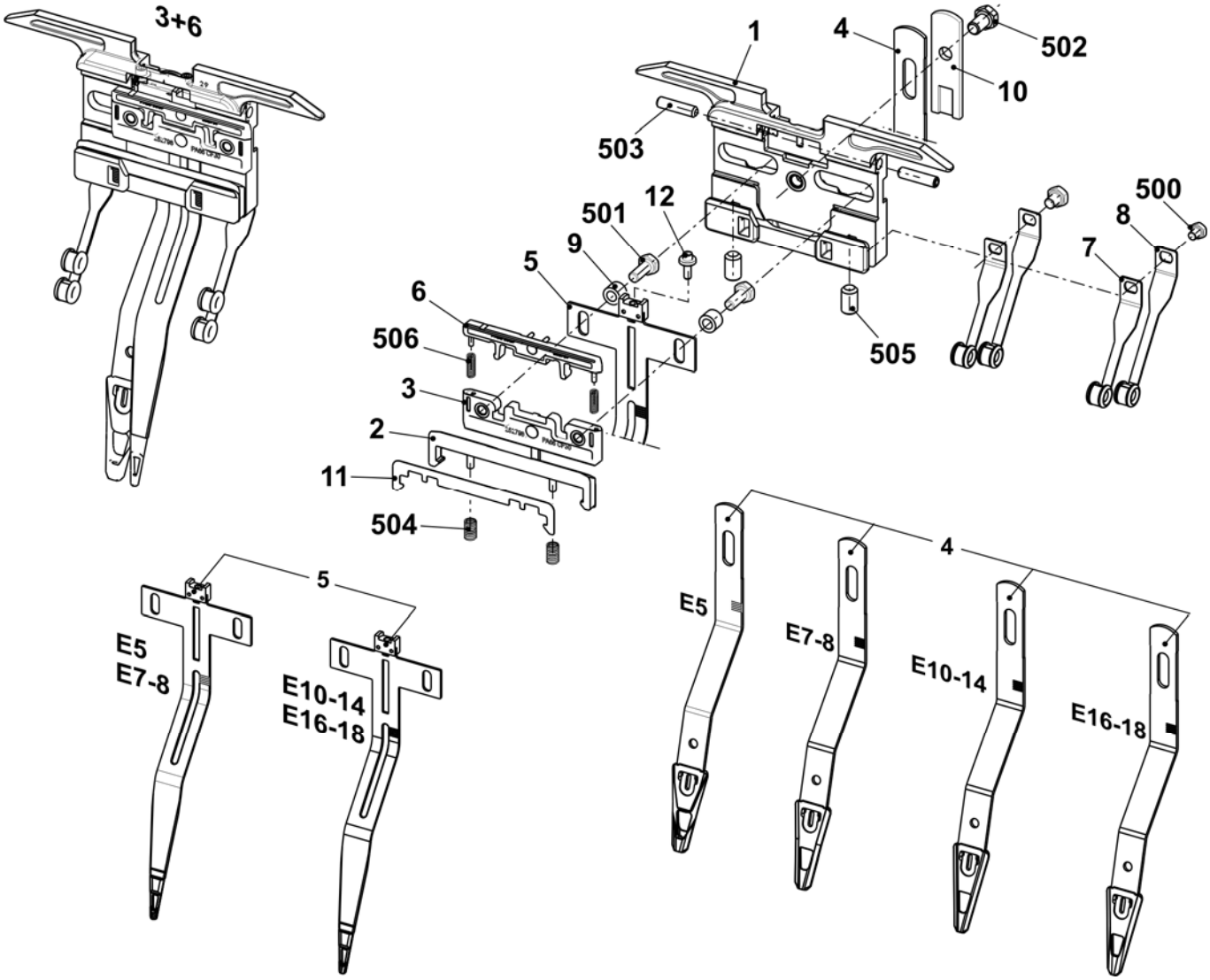

STOLL
THE RIGHT WAY TO KNIT

Plating yarn carrier 4+5

Pos	Designation	ID		Pos	Designation	ID
Σ	**Plating yarn carrier carriage 4+5 co.**					
	E5 + E2,5.2 + E3,5.2 + E5.2	**252 781**		6	Sliding part	252 797
	E7 + E8 + E6.2	**252 783**		7	Eyelet holder co.	252 815
	E10 + E12 + E14 + E7.2 + E8.2	**252 785**		8	Eyelet holder co.	252 816
	E16 + E18 + E9.2	**252 787**		9	Spacer	252 796
1	Plating yarn carrier carriage	252 806		10	Shim	213 035
2	Sliding part	212 583		11	Shim	216 143
3	Slider	252 798		12	Adjusting screw	253 436
4	Plating yarn carrier bow 4+5			500	Hexagon screw M4x5	243 779
	E5	252 790		501	Hexagon screw M4x10	020 346
	E7-8	252 791		502	Hexagon screw	252 832
	E10-14	252 792		503	Grub screw M4x16	254 196
	E16-18	252 793		504	Compression spring	021 399
5	Plating yarn carrier bow 4+5 E5-8	252 799		505	Threaded bolt	213 399
	Plating yarn carrier bow 4+5 E10-18	252 807		506	Compression spring	253 058

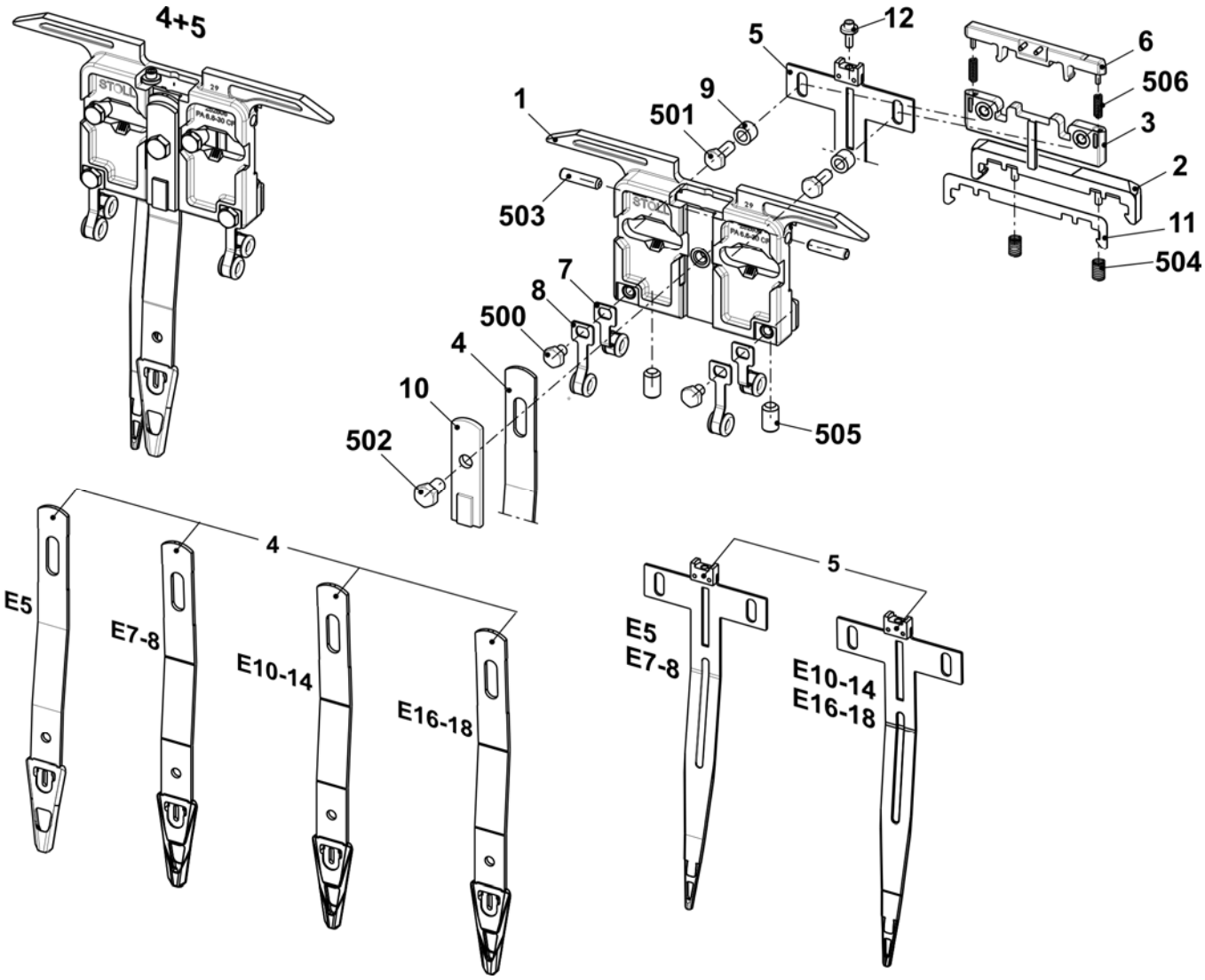

Carriage of plating yarn carrier (46mm)

Pos	*Designation*	*ID*		*Pos*	*Designation*	*ID*
Σ	**Plating yarn carrier E5-18**	**244 998**		2	Shim	213 035
1	YC carriage MW46	244 253		500	Hexagon screw M5x10	020 351

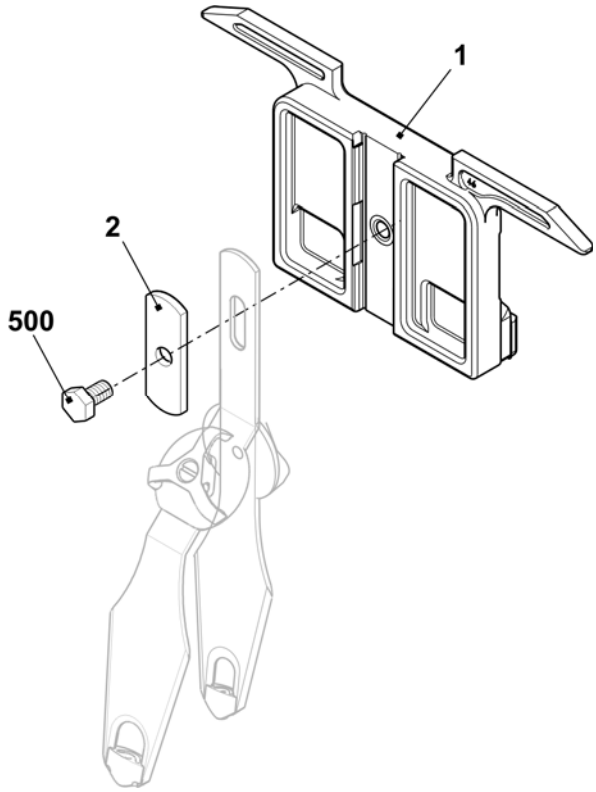

Carriage of plating yarn carrier (adjustable)

Pos	Designation	ID		Pos	Designation	ID
Σ	**Plating yarn carrier carriage co.**	**251 867**				
1	Carriage of yarn carrier	251 864		7	Guiding part	253 226
2	Sliding part	212 583		8	Shim	213 035
3	Shim	216 143		500	Compression spring	021 399
4	Threaded bolt	213 399		511	U-washer 4	022 481
5	Insert on the right	251 866		512	Hexagon screw M4x8	022 461
6	Insert on the left	251 865		513	Hexagon screw M5x10	020 351

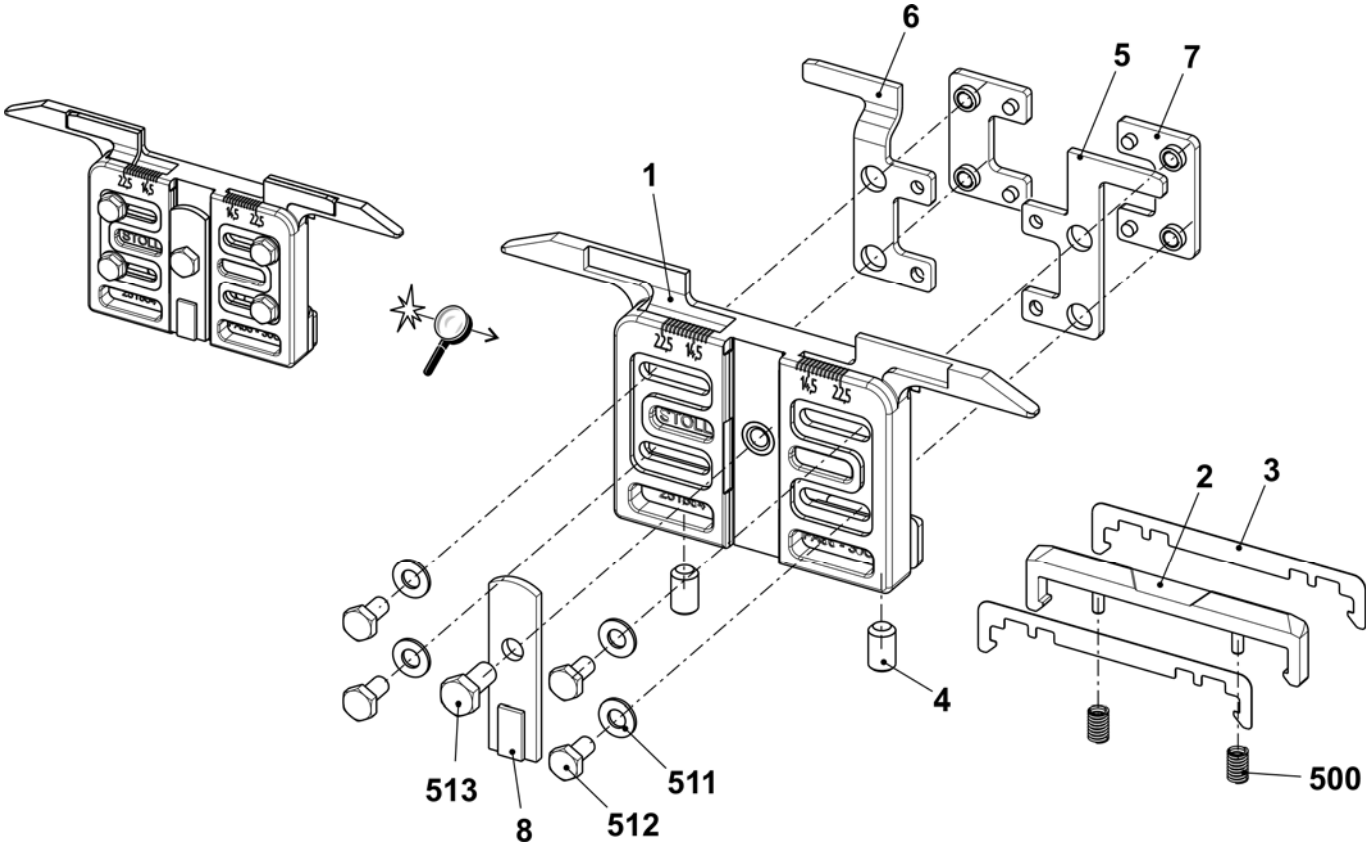

STIXX device

Pos	Designation		ID	Pos	Designation		ID
Σ	**STIXX device**		**228 943**		511	Spring nut M5	022 873
1	Yarn length measuring device		236 275		512	Pan-head screw M5x6	023 246
	1a	Sensor	211 354		513	Sheet metal screw ST3.5x13	022 940
	1b	Sensor co.	212 406		514	Spring washer A5	022 454
	1ba	Rubber running ring	212 390		515	Oval head screw with washer M3x10	023 380
	1c	Support	236 278		516	Cap screw M5x22	023 193
	1d	Threaded bar	211 801	2	Support		223 029
	1e	Yarn guide rod	211 352	3	Clamp		228 583
	1f	Card STIXX-CPU	300 934	5	Setting weight		212 241
	1g	Ventilator co.	212 255	8	Threaded bar		200 223
	510	Pan-head screw M5x10	023 247	500	Countersunk screw M8x16		023 113

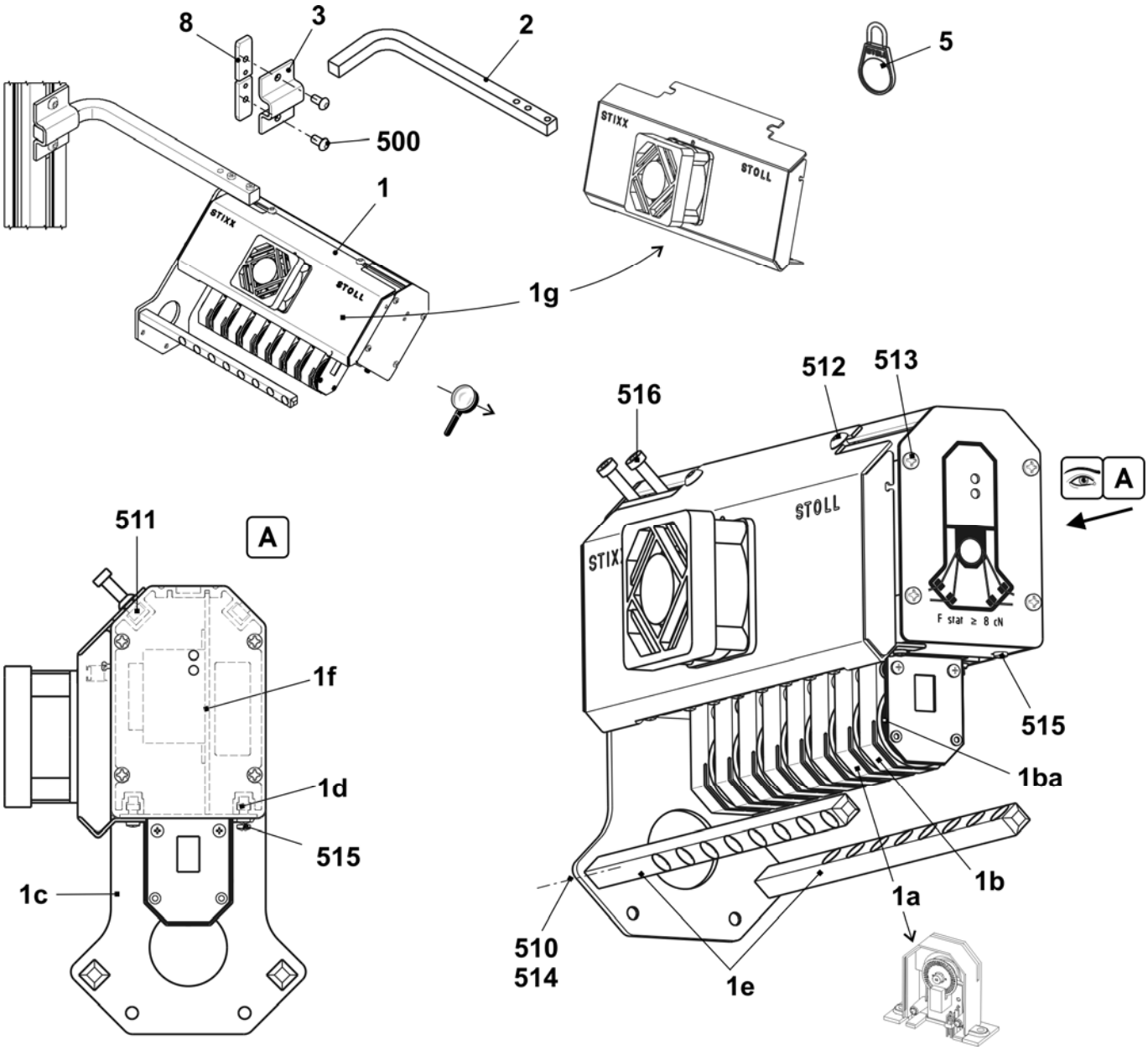

Feed wheel SFE

Pos	Designation	ID	Note
Σ	**Mounted set storage feed wheel SFE**	**231 427**	Please order the SFE spare parts at: **MEMMINGER-IRO GMBH** **Jakob-Mutz-Strasse 7** **D-72280 Dornstetten** Phone: +49 (0)7443 281-0 Fax: +49 (0)7443 281-101 The item no. and the designation for the SFE spare parts can be found in the enclosed assembling instructions of the company MEMMINGER-IRO.
1	Transfo with cable	231 979	
2	Mounted set SFE without transformer	231 980	
	2a Feed wheel SFE	231 537	

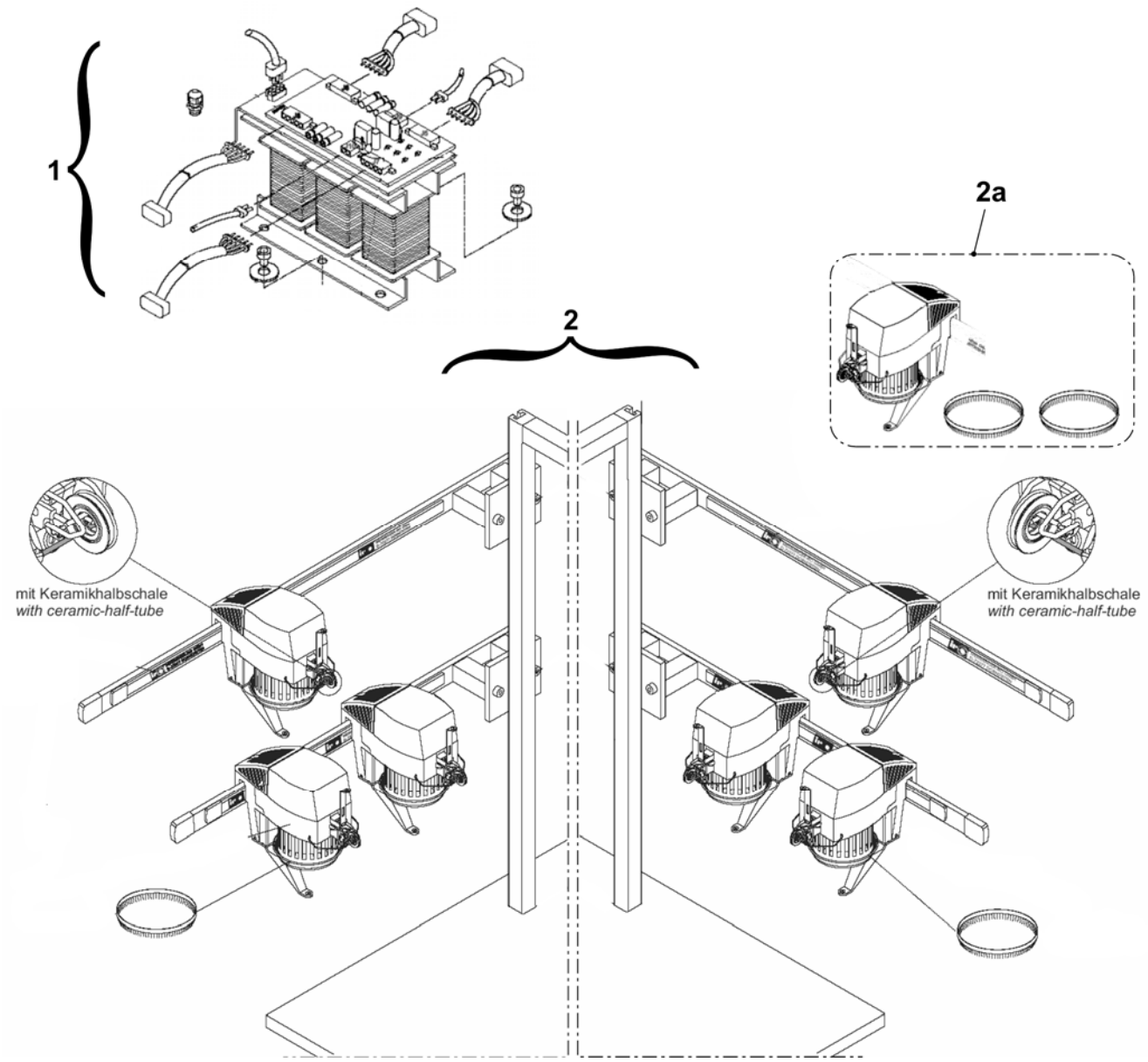

Bobbin holder on the left

Pos	Designation	ID	Pos	Designation	ID
Σ	**Bobbin holder on the left**	**253 965**	501	Countersunk screw M4x25	023 511
1	Support	253 969	502	U-washer 4	022 481
2	Support	252 769	503	Hexagon nut M4-6	022 536
3	Leaf spring	253 350	505	U-washer 6	022 431
4	Support left	253 347	506	Hexagon nut M6-6	022 899
5	Spacer	253 349	507	Countersunk screw M4x16	023 412
6	Yarn detector Massardi	226 964	508	Countersunk screw M4x12	023 062
7	Clamp	228 583	509	Countersunk screw M8x16	023 113
8	Sliding block	228 851	510	Countersunk screw M8x18	251 331
10	Cover	253 968	511	Countersunk screw M6x30	023 451
11	Support angle	253 964	512	Disc A4.3	022 482
12	Support angle	253 963	513	Countersunk screw M4x6	022 946
13	Support angle	253 967	514	Countersunk screw M4x10	023 450
14	Cable plating	253 468	515	Cap nut M4-6	253 805

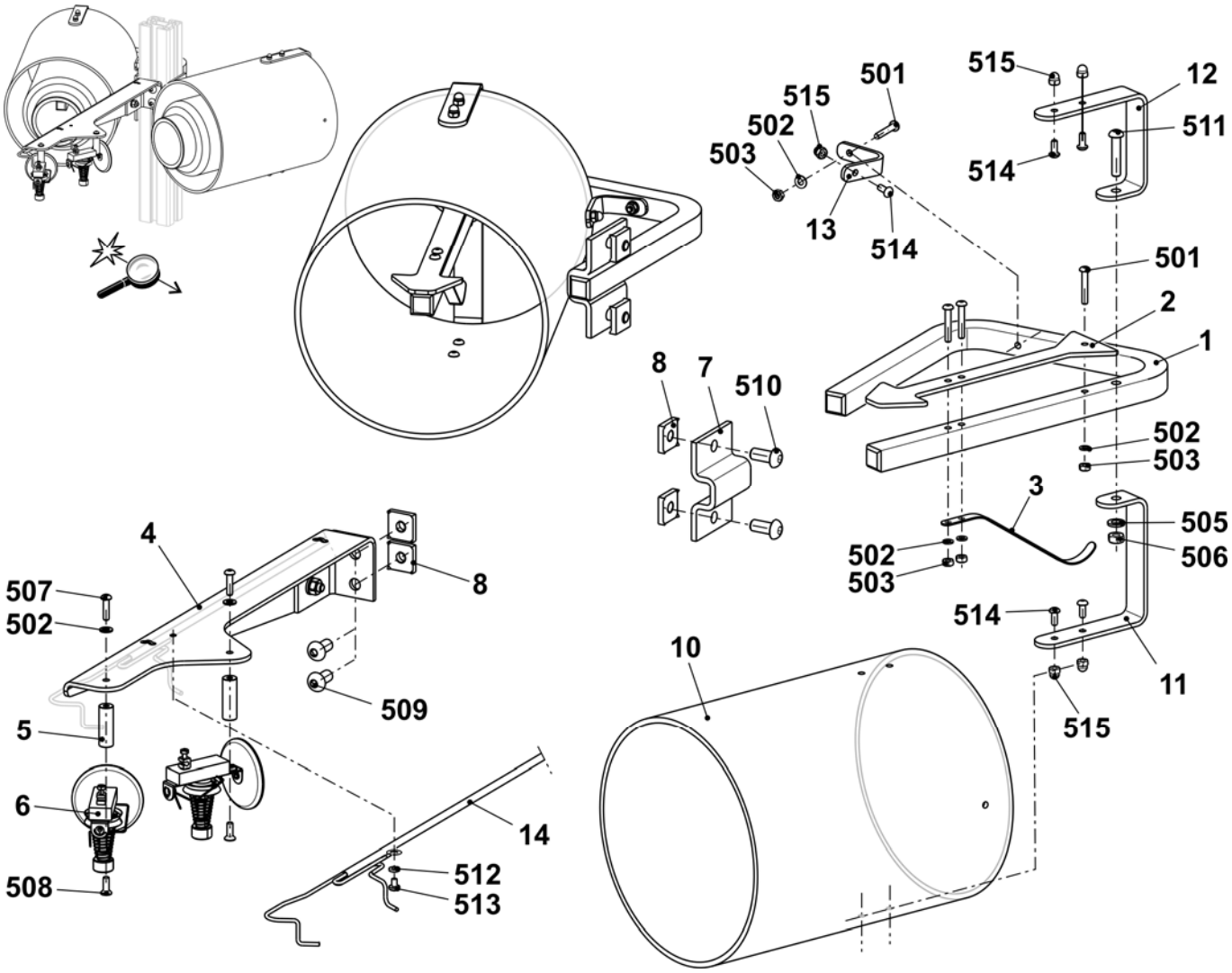

Bobbin holder on the right

Pos	Designation	ID		Pos	Designation	ID
Σ	**Bobbin holder on the right**	**253 966**		501	Countersunk screw M4x25	023 511
1	Support	253 969		502	U-washer 4	022 481
2	Support	252 769		503	Hexagon nut M4-6	022 536
3	Leaf spring	253 350		505	U-washer 6	022 431
4	Support right	253 348		506	Hexagon nut M6-6	022 899
5	Spacer	253 349		507	Countersunk screw M4x16	023 412
6	Yarn detector Massardi	226 964		508	Countersunk screw M4x12	023 062
7	Clamp	228 583		509	Countersunk screw M8x16	023 113
8	Sliding block	228 851		510	Countersunk screw M8x18	251 331
10	Cover	253 968		511	Countersunk screw M6x30	023 451
11	Support angle	253 964		512	Disc A4.3	022 482
12	Support angle	253 963		513	Countersunk screw M4x6	022 946
13	Support angle	253 967		514	Countersunk screw M4x10	023 450
14	Cable plating	253 468		515	Cap nut M4-6	253 805

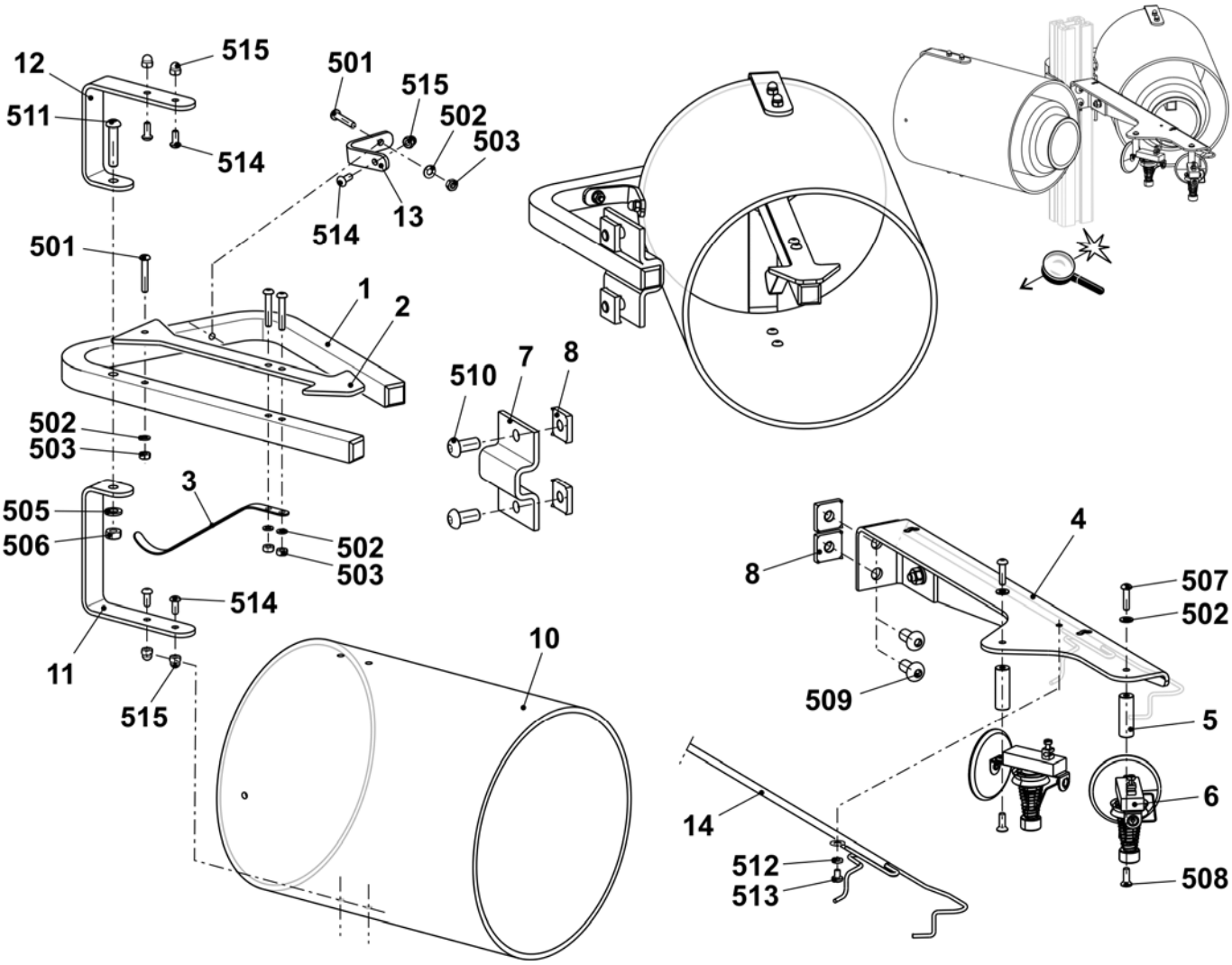

Additional board at the bottom

Pos	*Designation*	*ID*		*Pos*	*Designation*	*ID*
Σ	**Additional board**	**253 646**				
1	Additional board welded	253 472		8	Yarn guide	243 765
2	Positioning pin	202 777		9	Yarn guide	241 581
3	Disc D=130	062 385		500	Pan-head screw M4x30	023 681
4	Bobbin support	200 363		501	Washer 5.3x30x1.25	023 556

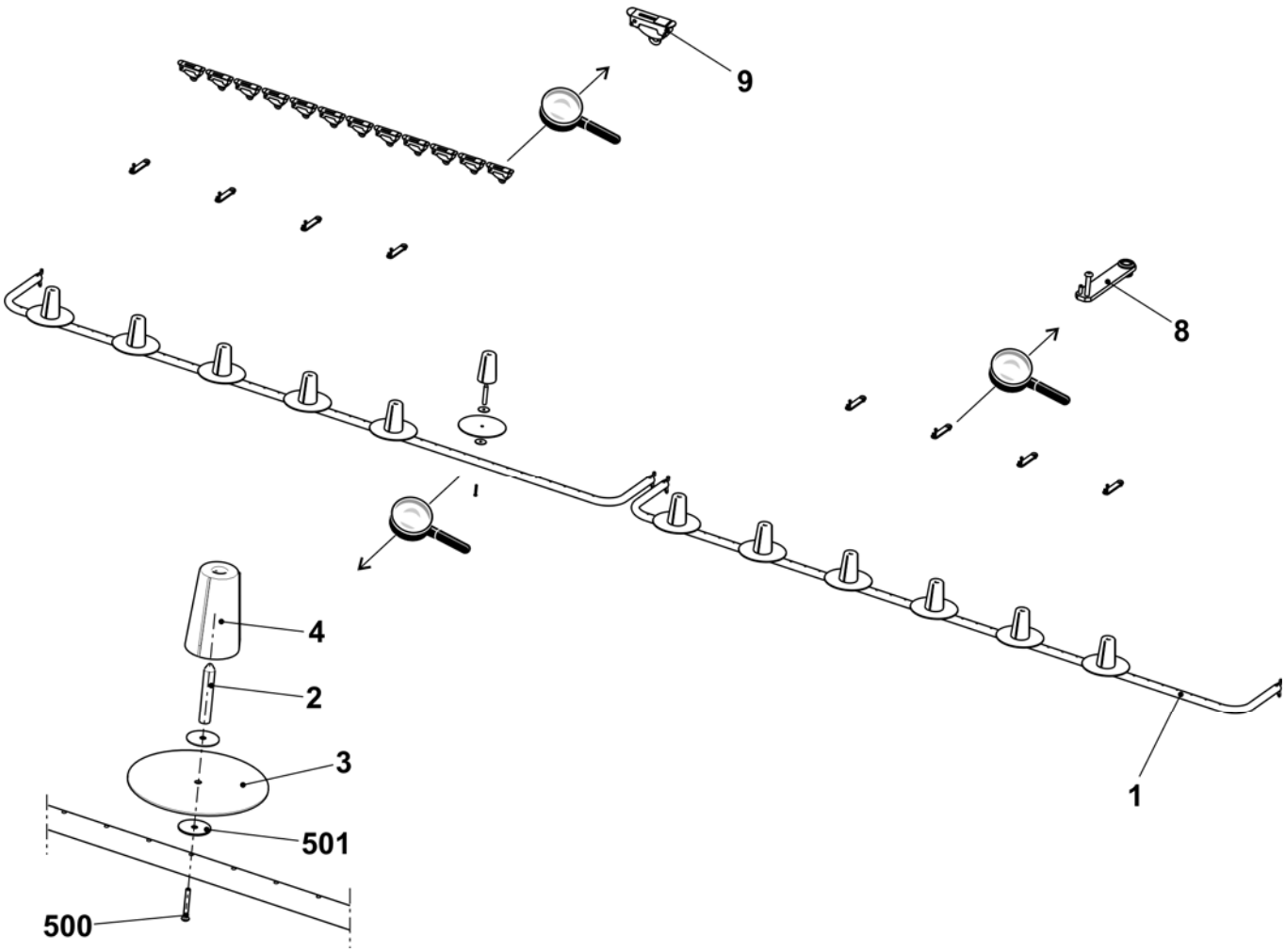

Conversion kit 32 IYC type 2

Pos.	Designation	ID
	CMS 822 conversion kit 32 IFF Type 2 E5 + E2,5.2 + E5.2	**250 302**
	CMS 822 conversion kit 32 IFF Type 2 E7 + E8 + E6.2	**250 303**
	CMS 822 conversion kit 32 IFF Type2 E10 + E12 + E14 + E7.2 + E8.2	**250 304**
	CMS 822 conversion kit 32 IFF Type2 E16 + E18	**250 305**

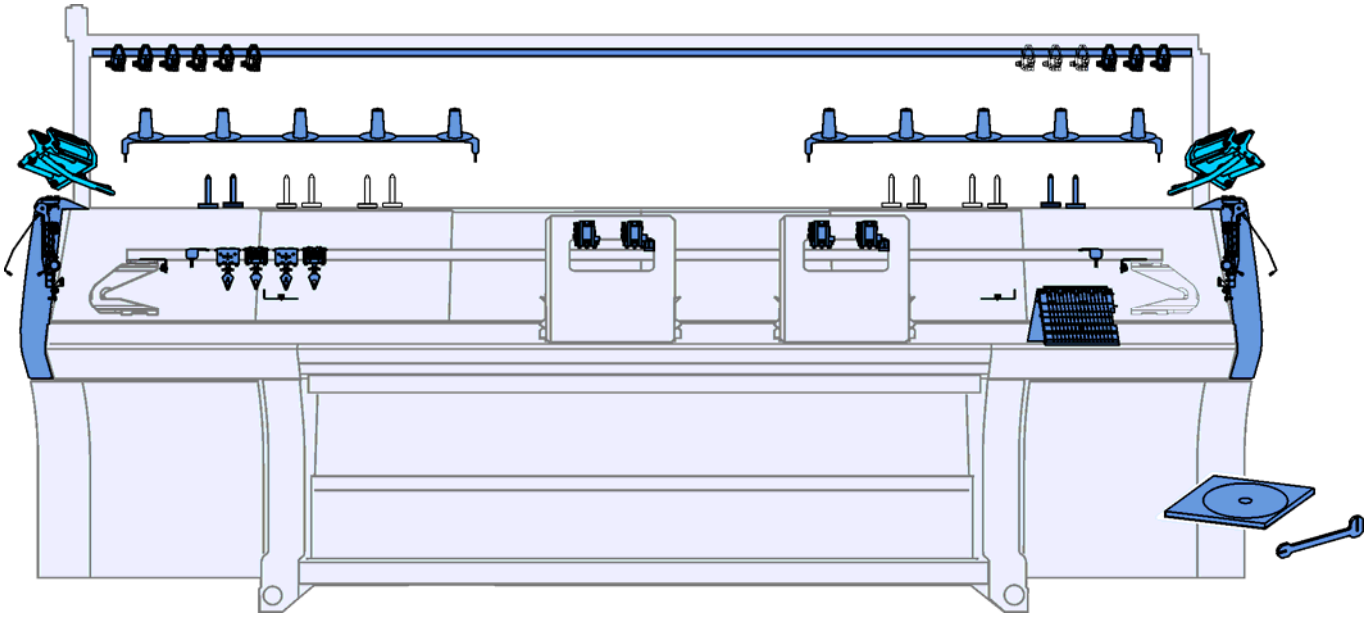

Overview of conversion kit E5 + E2,5.2 + E5.2

Pos	*Designation*	*ID*	*Pos*	*Designation*	*ID*
Σ	**CMS 822 conversion kit 32 IFF E5 + E2,5.2 + E5.2**	**250 302**			
1	Magnetic support co.	229 373	14	Yarn brake on the left	251 862
2	Yarn tensioner on the left co. E5	244 498	15	Yarn brake on the right	251 863
3	Yarn tensioner on the right co. E5	244 501	16	DVD instructions conversion kit IYC	245 169
4	Deflector on the left co.	223 316	17	Adjusting part for yarn carrier bow	250 119
5	Deflector on the right co.	223 049	18	Yarn guide co. E5 IYC	245 161
6	YC driving in the middle co.	245 298	19	Yarn brake co.	244 347
7	YC driving outside co.	245 297	20	Clamping bow	244 409
8	Friction feed wheel on the left co. 16-fold	244 991	21	Ceramic eyelet	240 640
9	Friction feed wheel on the right co. 16-fold	244 992	500	Cap screw M6x14	022 658
10	Yarn deflector on the left co.	244 517	501	U-washer 6	020 881
11	Yarn deflector on the right co.	244 521	502	Setting pin 6x16	020 677
12	Left clamping/cutting bed E5-8	253 653	503	Screw M6x20	244 824
13	Right clamping/cutting bed E5-8	253 652	504	Screw KB60X20	237 682

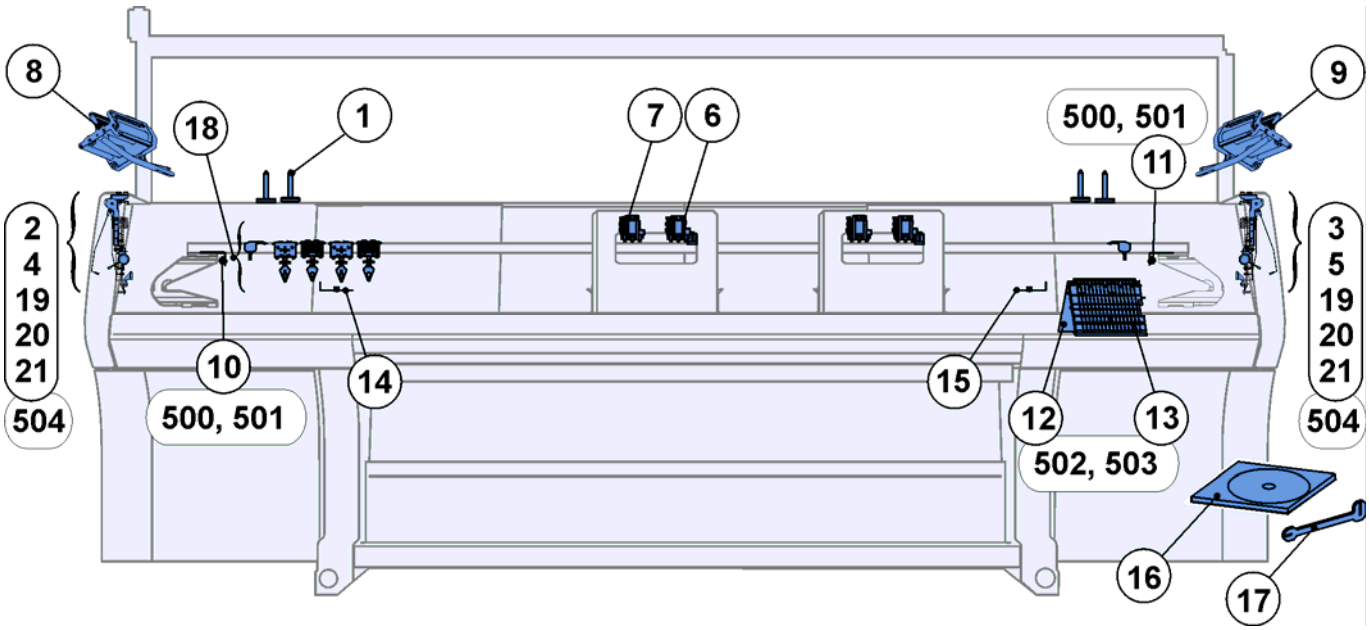

STOLL
THE RIGHT WAY TO KNIT

Overview of conversion kit E7 + E8 + E10 + E12 + E14 + E16 + E18 + E6.2 + E7.2 + E8.2

Pos	Designation	ID	Pos	Designation	ID
Σ	**CMS 822 conversion kit 32 IYC**				
	E7 + E8 + E6.2	**250 303**	19	Right clamping/cutting bed E5-8	253 652
	E10 + E12 + E14 + E7.2 + E8.2	**250 304**		Right clamping/cutting bed E10-14	253 654
	E16 + E18	**250 305**		Right clamping/cutting bed E16-18	244 062
1	Magnetic support co.	229 373	20	Yarn brake on the left	251 862
2	Yarn tensioner on the left co. E7-8	244 499	21	Yarn brake on the right	251 863
	Yarn tensioner on the left co. E10-18	244 500	22	DVD instructions conversion kit IYC	245 169
3	Yarn tensioner on the right co. E7-8	244 502	23	Additional board 7XX/8XX	241 928
	Yarn tensioner on the right co. E10-18	244 503	24	Adjusting part for yarn carrier bow	250 119
4	Yarn guide bar 84"	236 932	25	Yarn guide co. E7-8 IYC	245 162
5	Support on the left	243 602		Yarn guide co. E10-14 IYC	245 163
6	Support on the right	243 603		Yarn guide co. E16-18 IYC	245 164
7	Support	239 295	26	Yarn brake co.	244 347
8	Deflector on the left co.	223 316	27	Clamping bow	244 409
9	Deflector on the right co.	223 049	28	Ceramic eyelet	240 640
10	Yarn control device	237 124	500	Self-locking screw M6x12	023 415
11	Yarn guide bracket co.	241 581	501	Ribbed safety nut M6-10	023 414
12	YC driving in the middle co.	245 298	502	Square nut M8	023 269
13	YC driving outside co.	245 297	503	Countersunk screw M8x16	023 113
14	Friction feed wheel on the left co. 16-fold	244 991	504	Cap screw M6x14	022 658
15	Friction feed wheel on the right co. 16-fold	244 992	505	U-washer 6	020 881
16	Yarn deflector on the left co.	244 517	506	Setting pin 6x16	020 677
17	Yarn deflector on the right co.	244 521	507	Screw M6x20	244 824
18	Left clamping/cutting bed E5-8	253 653	508	Screw KB60X20	237 682
	Left clamping/cutting bed E10-14	253 655			
	Left clamping/cutting bed E16-18	244 821			

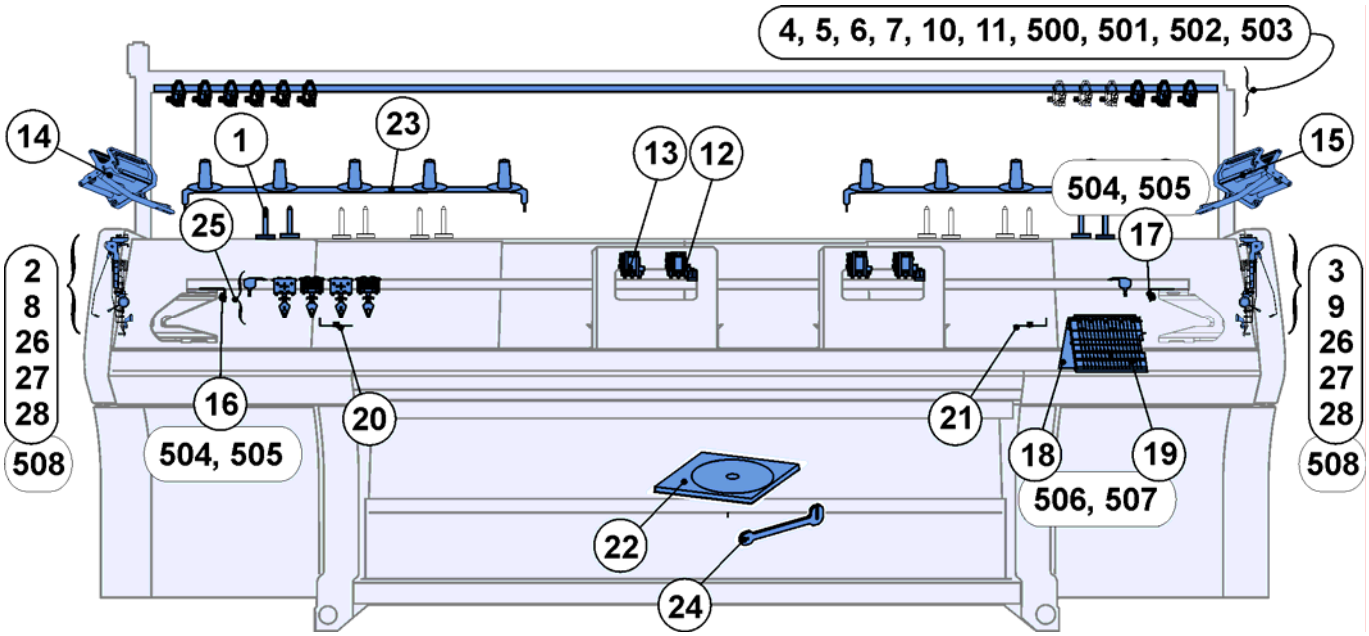

Magnetic support

Pos	*Designation*	*ID*		*Pos*	*Designation*	*ID*
Σ	**Magnetic support co.**	**229 373**				
1	Positioning pin	229 345		3	Felted round blank sheet 37mm	245 165
2	Flat gripper Pg40l	227 311		500	Countersunk head screw M5x16	023 417

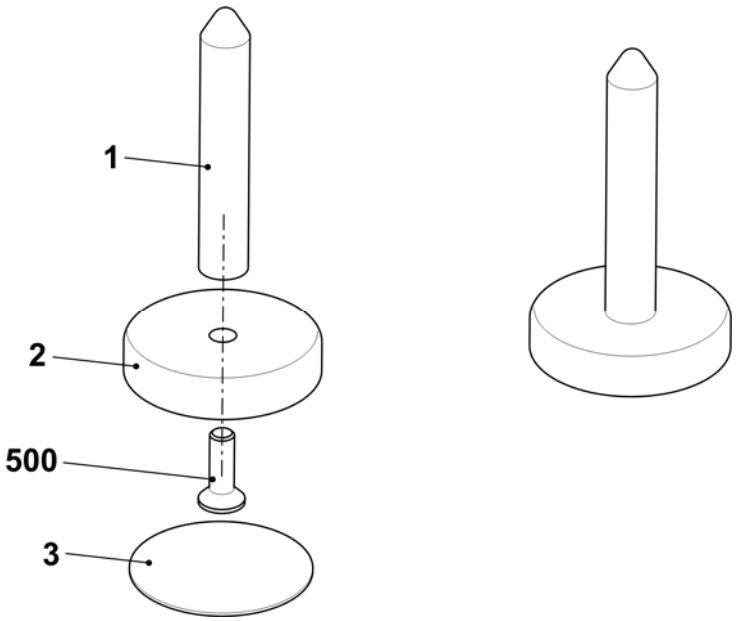

Parts for the left safety cover

Pos	Designation	ID		Pos	Designation	ID
2	Yarn tensioner on the left co.					
	E5 + E2,5.2 + E3,5.2 + E5.2	244 498		26	Yarn brake co.	244 347
	E7 + E8 + E6.2	244 499		27	Clamping bow	244 409
	E10 + E12 +E14 + E18 + E7.2 + 8.2 + E9.2	244 500		28	Ceramic eyelet	240 640
8	Deflector on the left co.	223 316		508	Screw KB60X20	237 682

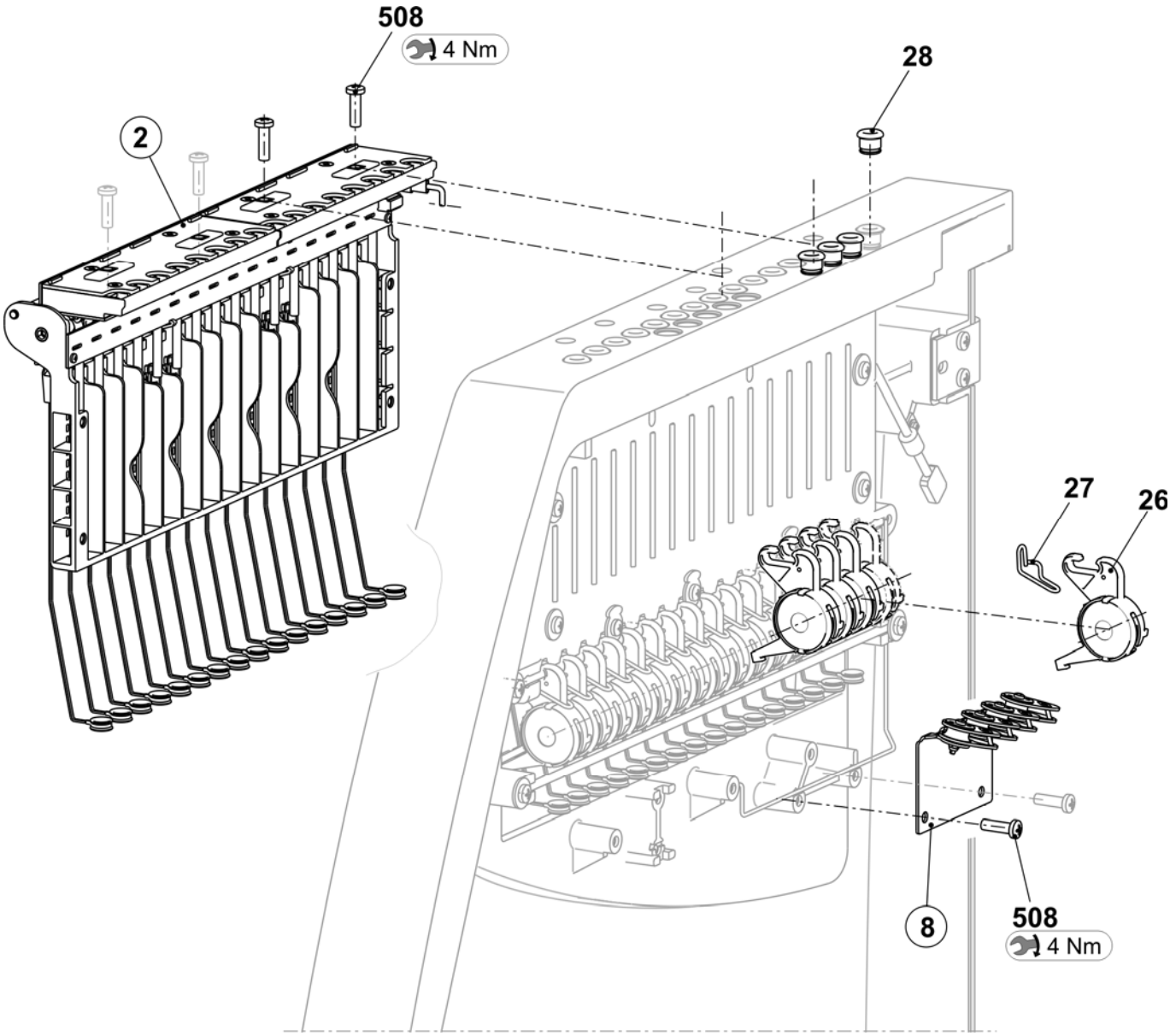

Parts for the right safety cover

Pos	Designation	ID		Pos	Designation	ID
3	Yarn tensioner on the right co.					
	E5 + E2,5.2 + E3,5.2 + E5.2	244 501		26	Yarn brake co.	244 347
	E7 + E8 + E6.2	244 502		27	Clamping bow	244 409
	E10 + E12 +E14 + E18 + E7.2 + 8.2 + E9.2	244 503		28	Ceramic eyelet	240 640
9	Deflector on the right co.	223 049		508	Screw KB60X20	237 682

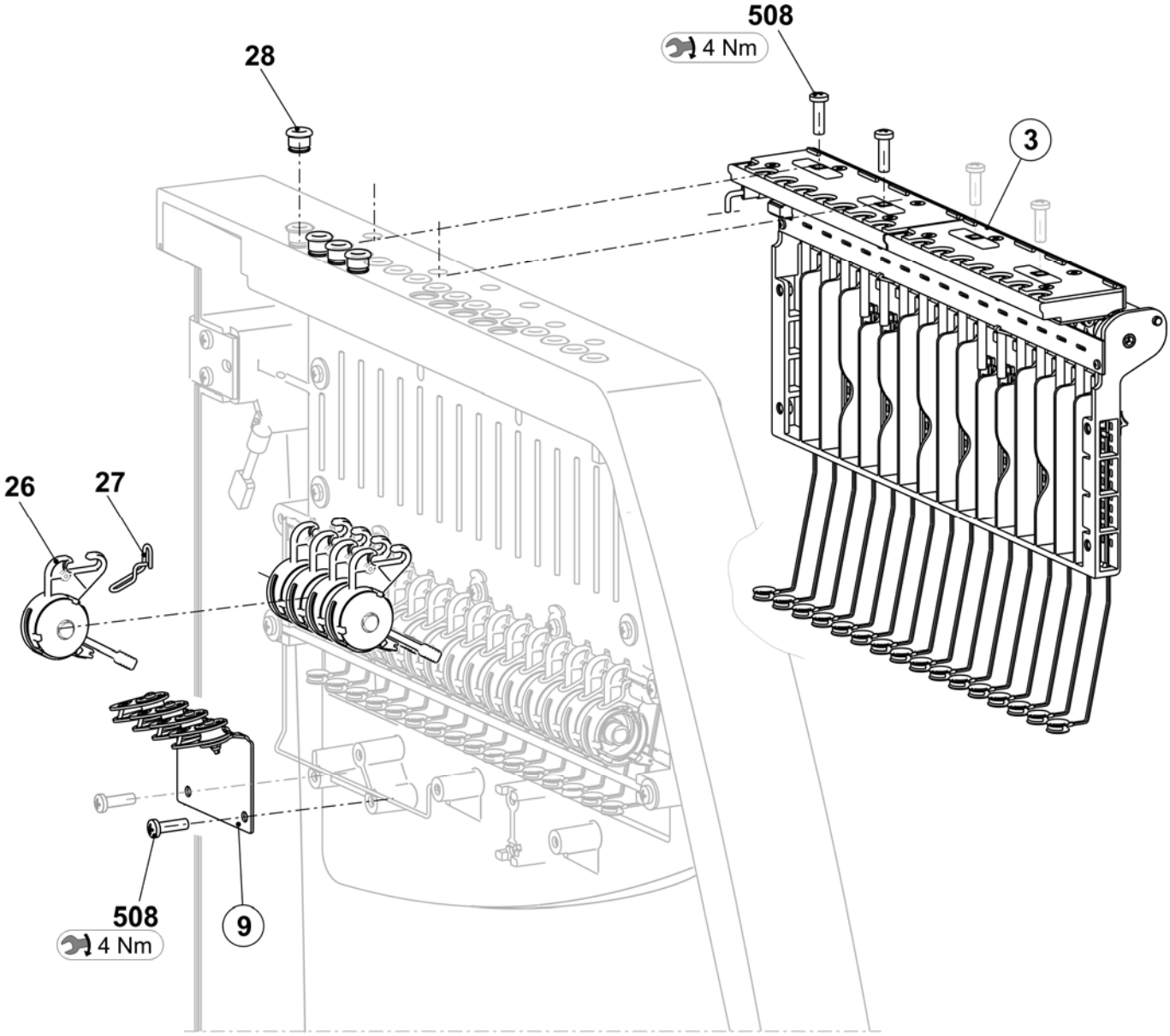

Parts for the yarn guide system

Pos	Designation	ID		Pos	Designation	ID
Σ	**Yarn guide system**					
4	Yarn guide bar 84"	236 932		11	Yarn guide bracket co.	241 581
5	Support on the left	243 602		500	Self-locking screw M6x12	023 415
6	Support on the right	243 603		501	Ribbed safety nut M6-10	023 414
7	Support	239 295		502	Square nut M8	023 269
10	Yarn control device	237 124		503	Countersunk screw M8x16	023 113

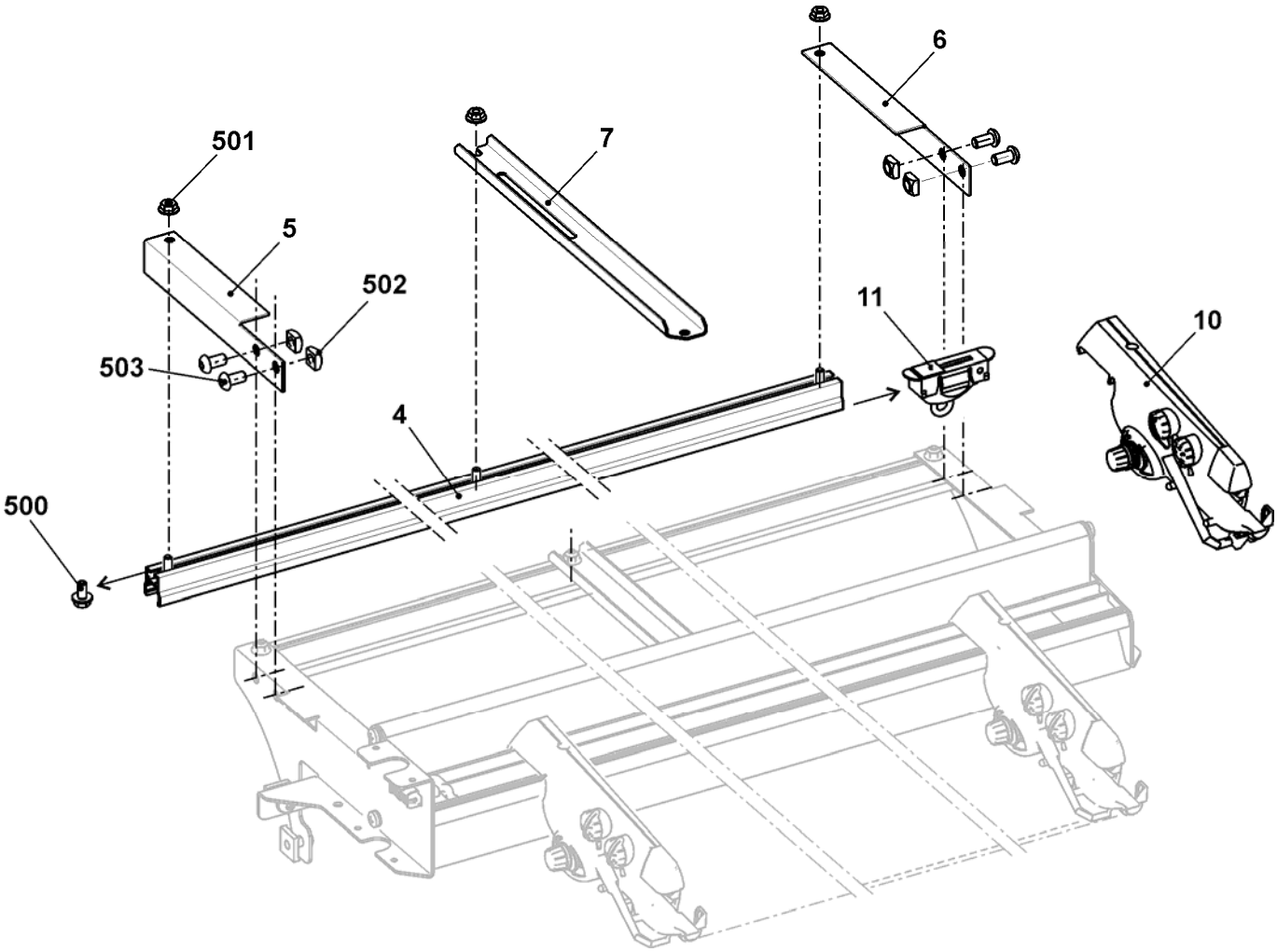

Driving in the middle

Pos	Designation	ID		Pos	Designation	ID
Σ	**YC driving in the middle co.**	**245 298**		7	Card yarn carrier final stages OKC	300 960
1	Yarn carrier plunger on the right co.	243 080		500	Cap screw M4x14-I-Torx	242 279
2	Yarn carrier plunger on the left co.	243 118		501	Cap screw M4x25-I-Torx	245 305
3	Support angle for jack	245 313		502	Cap screw M3x12-12.9	022 648
4	Mounting block in the middle	245 308		503	Screw KB60X20	243 625
5	Switch mechanism	251 137		900	Shoulder screw	231 899
6	Guiding part	239 972		901	Cap screw M6x16	020 135

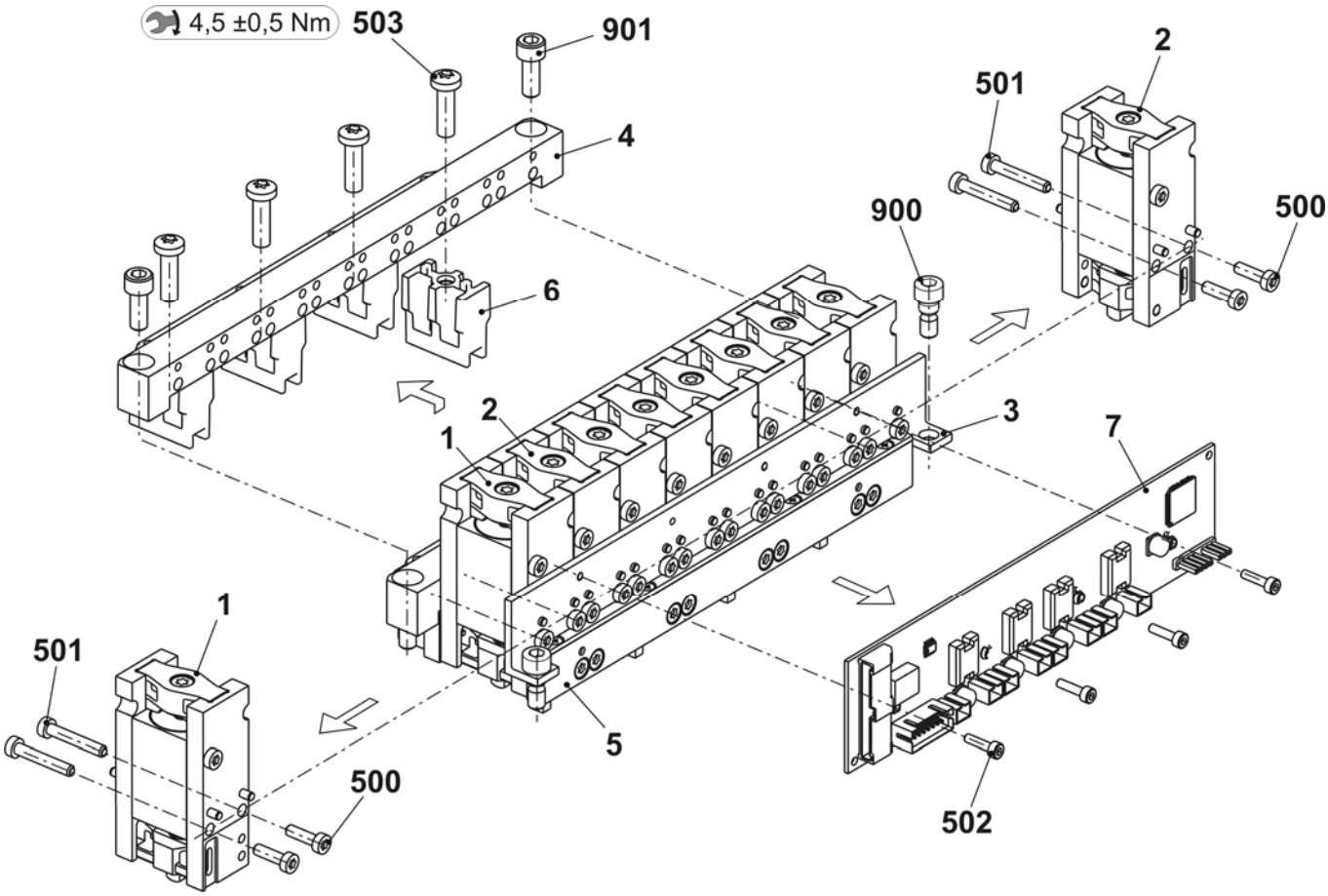

Driving outside

Pos	Designation	ID		Pos	Designation	ID
Σ	**YC driving outside co.**	**245 297**		6	Switch mechanism	251 137
1	Yarn carrier plunger on the right co.	243 080		500	Cap screw M4x14-I-Torx	242 279
2	Yarn carrier plunger on the left co.	243 118		501	Cap screw M4x25-I-Torx	245 305
3	Support angle for jack	245 313		502	Cap screw M3x12-12.9	022 648
4	Mounting block outside	245 294		900	Shoulder screw	231 899
5	Card yarn carrier final stages OKC	300 960		901	Cap screw M6x16	020 135

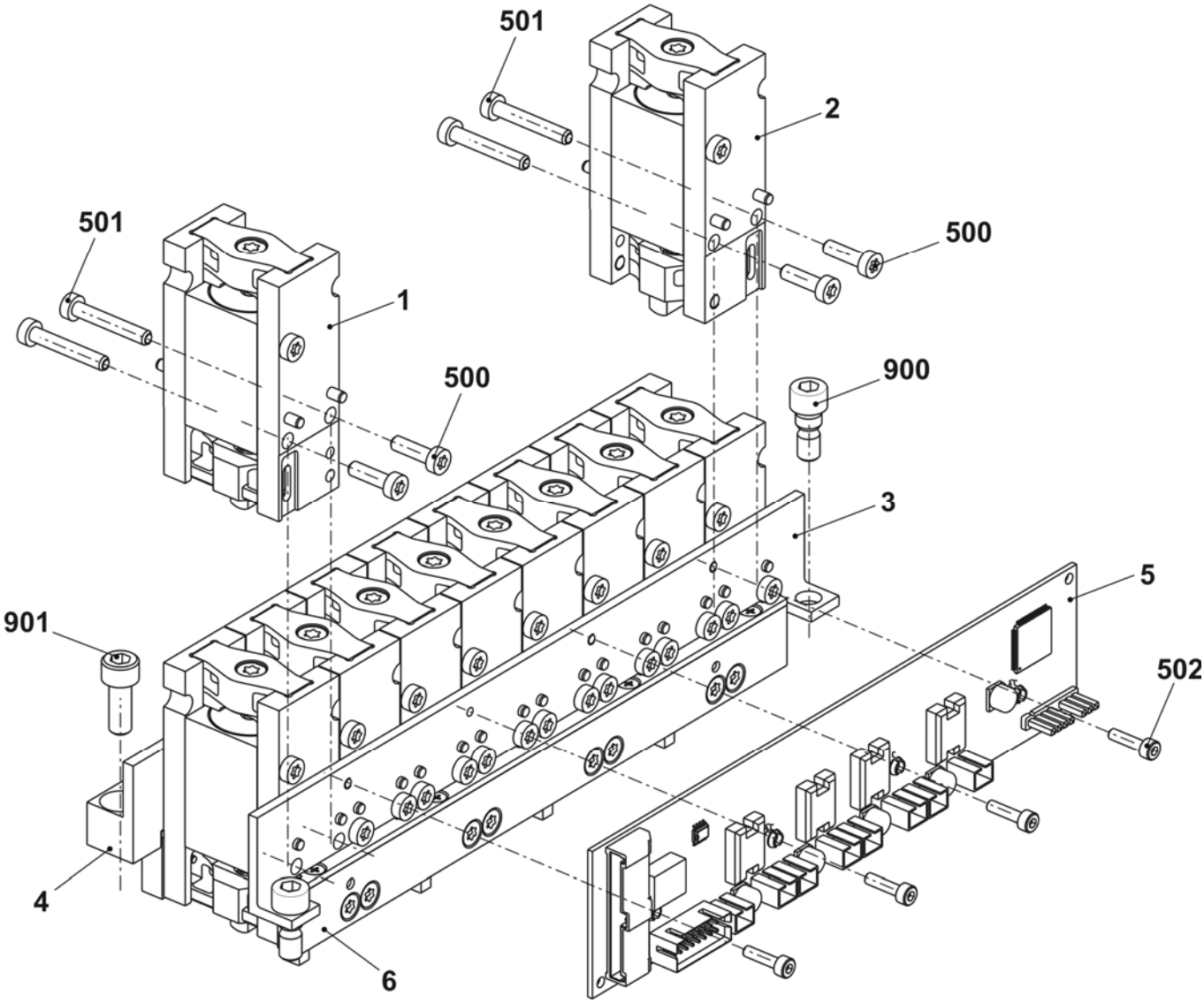

Friction feed wheel on the left and on the right co.

Pos	*Designation*	*ID*		*Pos*	*Designation*	*ID*
ΣL	**Friction feed wheel on the left co. 16-fold**	**244 991**		**ΣR**	**Friction feed wheel on the right co. 16-fold**	**244 992**
1	Friction feed wheel on the left	244 185		1	Friction feed wheel on the right	244 186
2	Support left	243 869		2	Support right	244 142
501	Countersunk screw M8x25	023 027		501	Countersunk screw M8x25	023 027
502	Cap screw M6x16	020 135		502	Cap screw M6x16	020 135
503	Countersunk screw M5x8	239 408		503	Countersunk screw M5x8	239 408

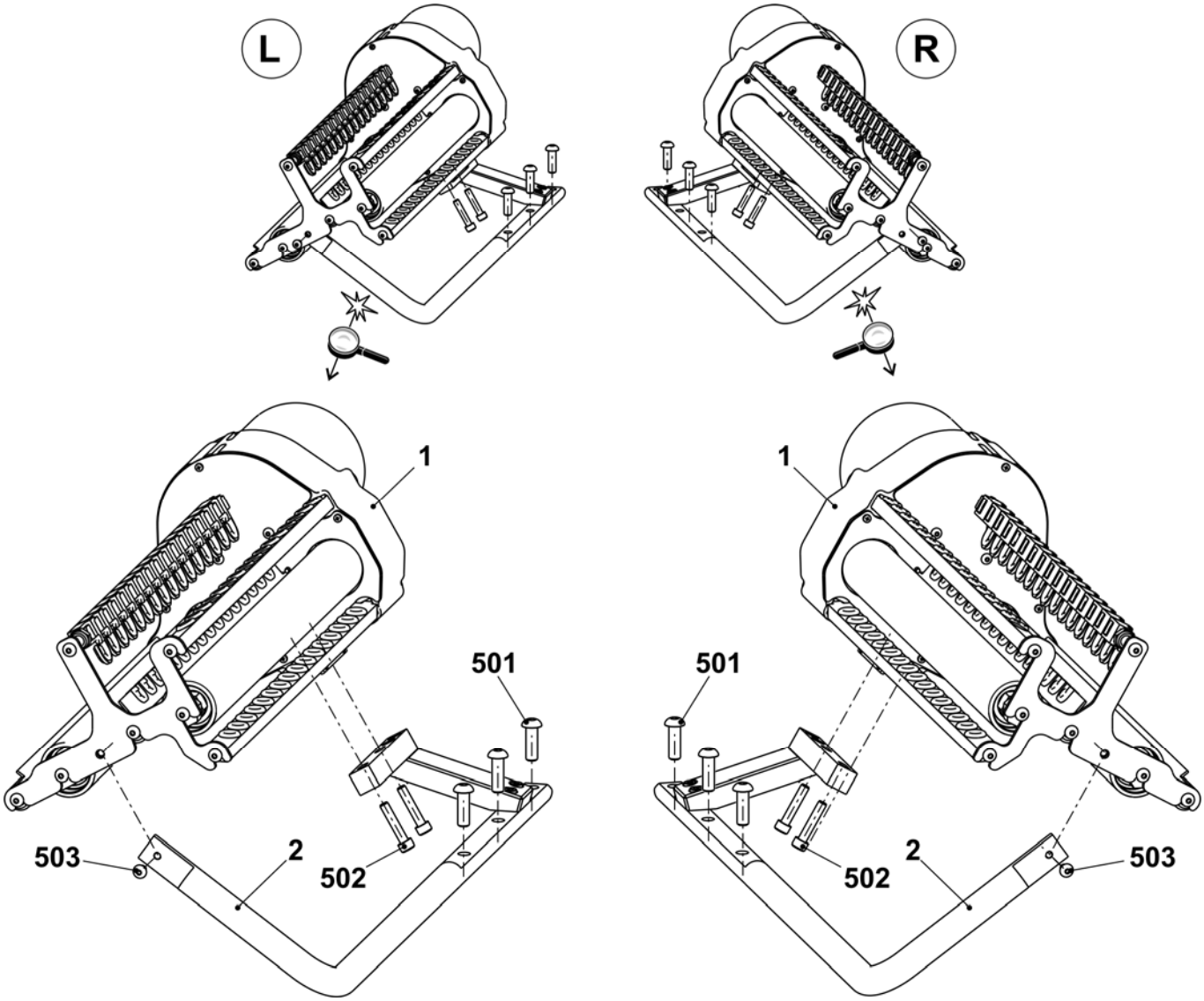

Friction feed wheel on the left

Pos	Designation		ID	Pos	Designation	ID
Σ	**Friction feed wheel on the left co. 16-fold**		**244 185**	10	Cover	251 098
1	Housing		240 368	11	Bush	221 391
2	Friction roller co.		243 860	12	Ribbed V-belt pulley	221 268
3	Three-phase A.C. motor 3x42V co.		219 800	13	Ribbed V-belt	206 927
	3a	Three-phase A.C. motor	220 161	14	Rod	243 868
	3b	Microswitch	008 664	15	Cover	230 758
5	Yarn guide rod 16-fold co.		244 576	18	Deflector co. 16-fold	250 102
6	Yarn guide rod 16-fold co.		244 578	19	Protective plate	251 096
	6a	Yarn guide rod 16-fold	244 577	500	Screw KB30x8	236 228
	6b	Ceramic eyelet	240 640	501	Cap screw M20x10	244 736
7	Stop motion rail on the right co.		243 863	502	Cap screw M5x12	020 132
	7a	Stop motion rail on the right	243 864	503	Cap screw M5x16	022 726
	570	Slide bearing GFM-101214-07	023 627	504	Cap screw M5x25	023 523
	571	O-ring 10x1.3	244 895	506	Washer 5.3x22x2.5	023 219
8	Stop motion rail on the left co.		243 865	507	U-washer 5	020 901
	8a	Stop motion rail on the left	243 866	508	Shim ring 15x21x1	023 216
	8b	Eyelet	230 662	510	U-washer 5	023 542
	580	Slide bearing GFM-101214-07	023 627	511	Countersunk screw M5x8	239 408
	581	O-ring 10x1.3	244 895	512	Countersunk screw M4x5	239 549
9	Strap		251 113	513	Countersunk screw M4x10	023 450

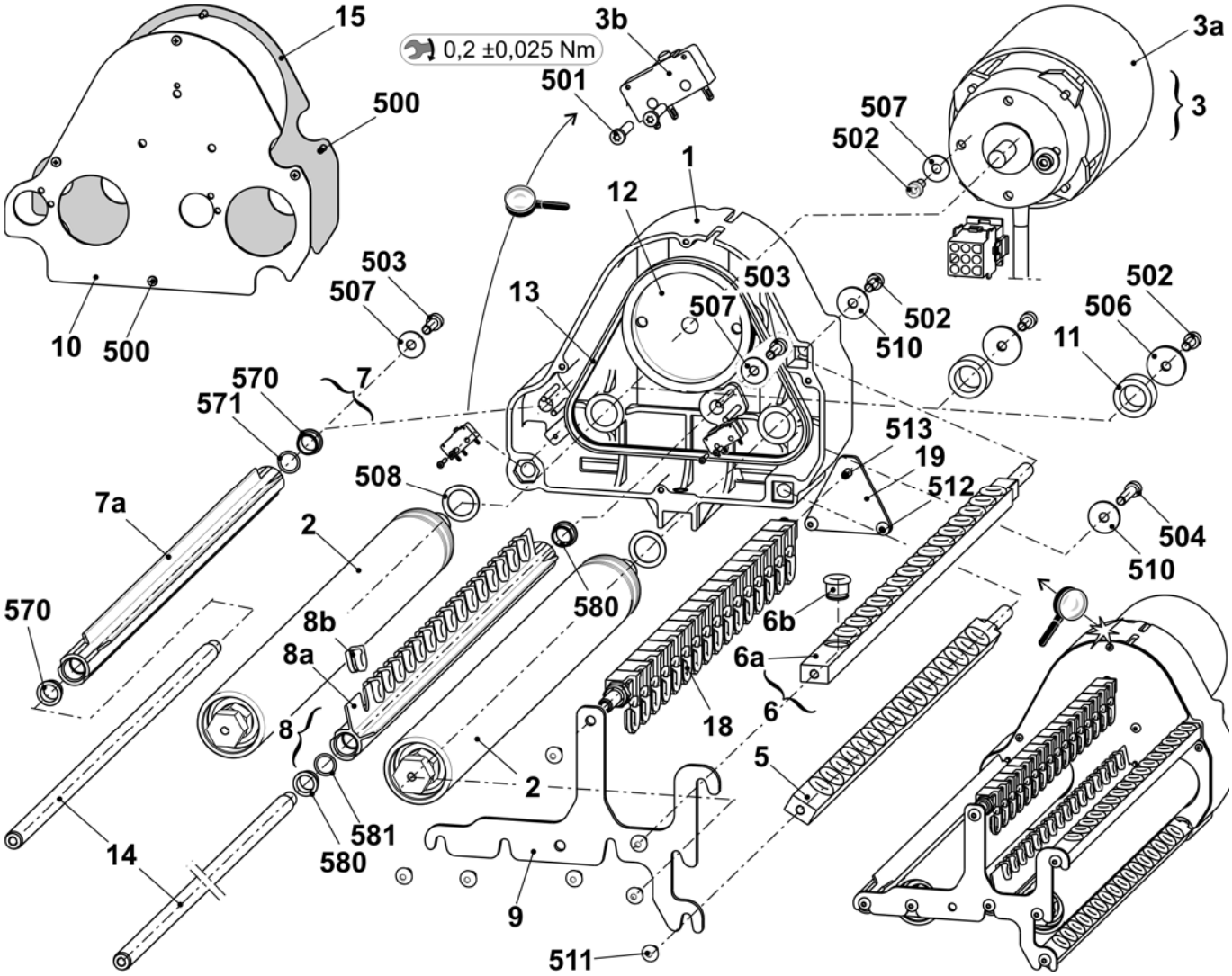

Friction feed wheel on the right

Pos	Designation		ID	Pos	Designation	ID
Σ	**Friction feed wheel on the right co. 16-fold**		**244 186**	10	Cover	251 098
1	Housing		240 368	11	Bush	221 391
2	Friction roller co.		243 860	12	Ribbed V-belt pulley	221 268
3	Three-phase A.C. motor 3x42V co.		219 800	13	Ribbed V-belt	206 927
	3a	Three-phase A.C. motor	220 161	14	Rod	243 868
	3b	Microswitch	008 664	15	Cover	230 758
5	Yarn guide rod 16-fold co.		244 772	18	Deflector co. 16-fold	250 102
6	Yarn guide rod 16-fold co.		244 578	19	Protective plate	251 096
	6a	Yarn guide rod 16-fold	244 577	500	Screw KB30x8	236 228
	6b	Ceramic eyelet	240 640	501	Cap screw M20x10	244 736
7	Stop motion rail on the right co.		243 863	502	Cap screw M5x12	020 132
	7a	Stop motion rail on the right	243 864	503	Cap screw M5x16	022 726
	570	Slide bearing GFM-101214-07	023 627	504	Cap screw M5x25	023 523
	571	O-ring 10x1.3	244 895	506	Washer 5.3x22x2.5	023 219
8	Stop motion rail on the right co.		244 530	507	U-washer 5	020 901
	8a	Stop motion rail on the right	244 531	508	Shim ring 15x21x1	023 216
	8b	Eyelet	230 662	510	U-washer 5	023 542
	580	Slide bearing GFM-101214-07	023 627	511	Countersunk screw M5x8	239 408
	581	O-ring 10x1.3	244 895	512	Countersunk screw M4x5	239 549
9	Strap		251 113	513	Countersunk screw M4x10	023 450

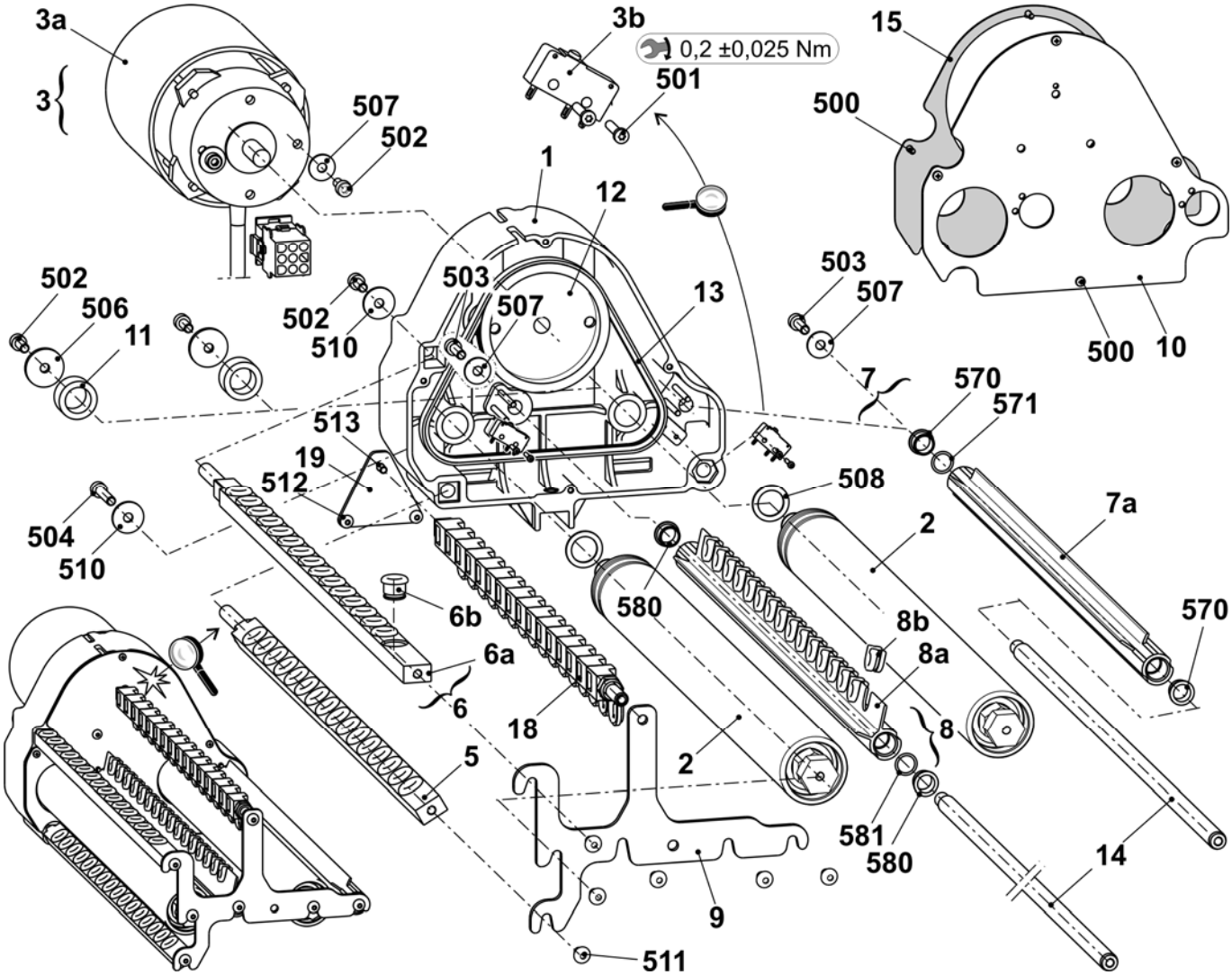

Thread deflector on the left

Pos	Designation	ID		Pos	Designation	ID
Σ	**Yarn deflector on the left co.**	**244 517**				
1	Support angle	244 516		502	U-washer 6	020 881
2	Bolt	214 894		503	U-washer 6	022 853
3	Yarn carrier MH 6	200 127		504	O-ring 6x3	022 856
500	Countersunk screw M6x10	023 183		504*	Cap screw M6x14	022 658
501	Cap screw M6x80	023 064		505*	U-washer 6	020 881

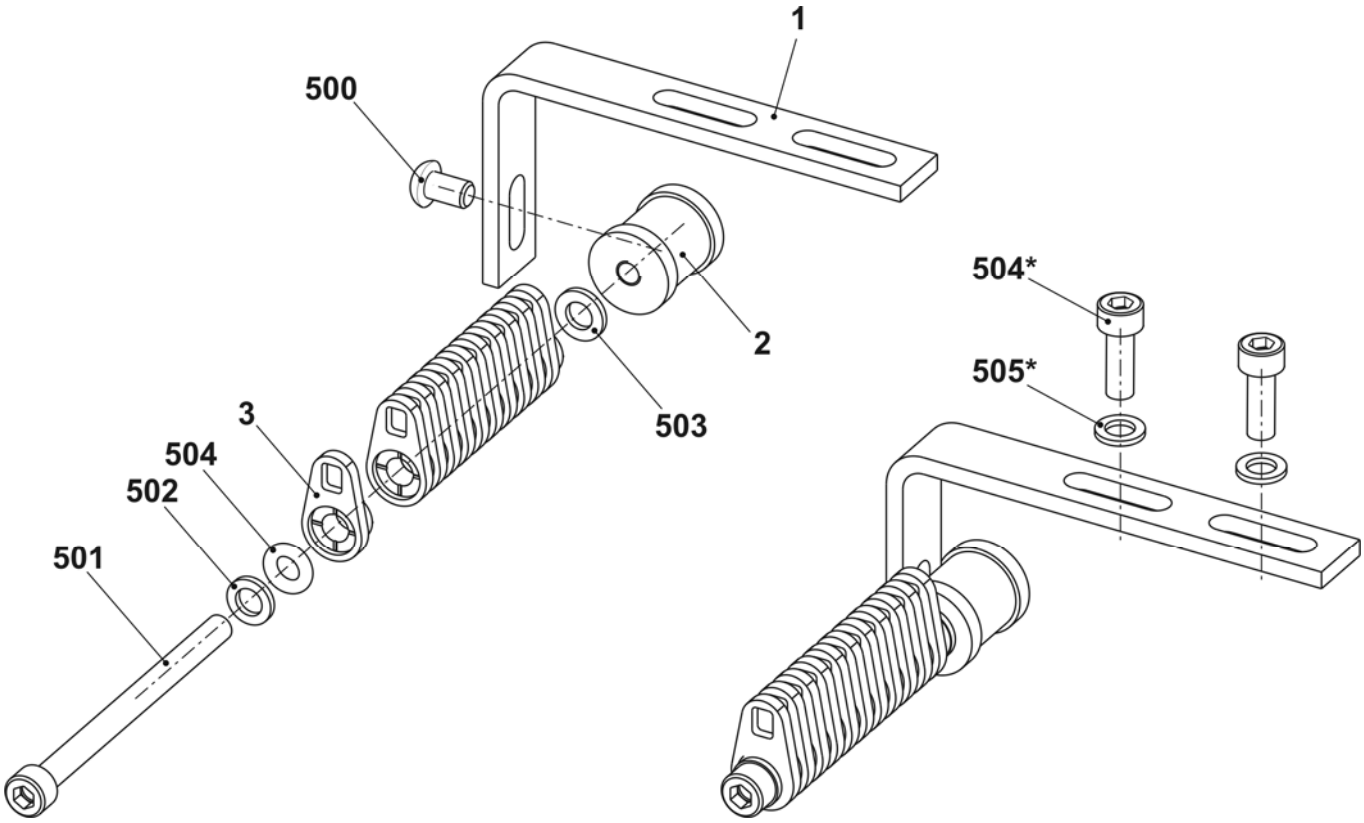

Yarn deflector on the right

Pos	Designation	ID		Pos	Designation	ID
Σ	**Yarn deflector on the right co.**	**244 521**				
1	Support angle	244 516		502	U-washer 6	020 881
2	Bolt	214 894		503	U-washer 6	022 853
3	Yarn carrier MH 6	200 127		504	O-ring 6x3	022 856
500	Countersunk screw M6x10	023 183		504*	Cap screw M6x14	022 658
501	Cap screw M6x80	023 064		505*	U-washer 6	020 881

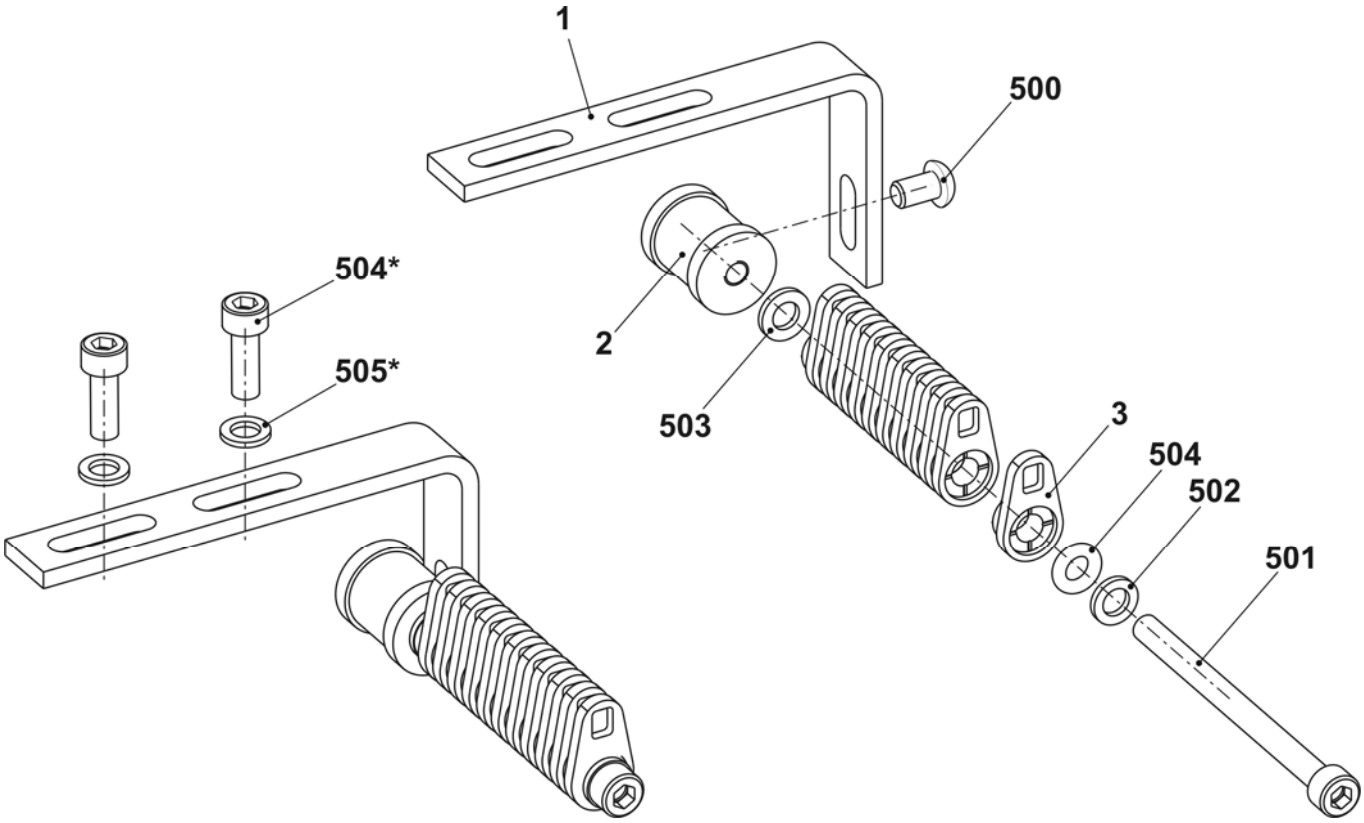

Left clamping/cutting bed E5 + E7 + E8 + E2,5.2 + E3,5.2 + E5.2 + E6.2

Pos	Designation		ID	Pos	Designation	ID
Σ	**Left clamping/cutting bed E5 + E7 + E8 + E2,5.2 + E3,5.2 + E5.2 + E6.2**		**253 653**			
1	Guide plate on the left E5-14		244 642	8	Spring holder	244 590
	1a	Guide plate on the left E5-14	244 632	9	Holding strip on the left	250 607
	1b	Cover rail	243 923	10	Tuck needle on the left E5-8	244 729
	1c	Cover rail	243 924	11	Intermediate cam E10-14	244 591
	1d	Fixed wire	243 925	12	Coupling part E4-E8	200 682
	1e	Axle	211 349	13	Intermediate slider with brake E5-E8	237 323
	1f	Guide pin	211 351	14	Selection jack E4-E8	200 687
	1g	Fixed wire	215 927	15	Selector spring E4-E8	200 690
	1h	Fixed wire	244 589	500	Cap screw M4x10	023 136
	510	Setting pin 3x16	020 649	501	Hexagon nut M4-8	023 046
	511	Set screw M5x5	236 061	502	U-washer 4	020 870
2	Cover on the left co. E10-14		251 120	503	Countersunk head screw M3x10	242 029
3	Catch hook on the left E10-14		251 377	504	Tension spring 5x0.5x17.4	023 377
4	Slider E5-14		253 084	505	Compression spring D 117 W 07x4.3x12.1	023 521
5	Blade		243 948	506	Set screw M6x8-45H	022 581
6	Clamp on the left co.		244 633	560*	Setting pin 6x16	020 677
7	Spring holder		244 032	570*	Cap screw M6x20	244 824

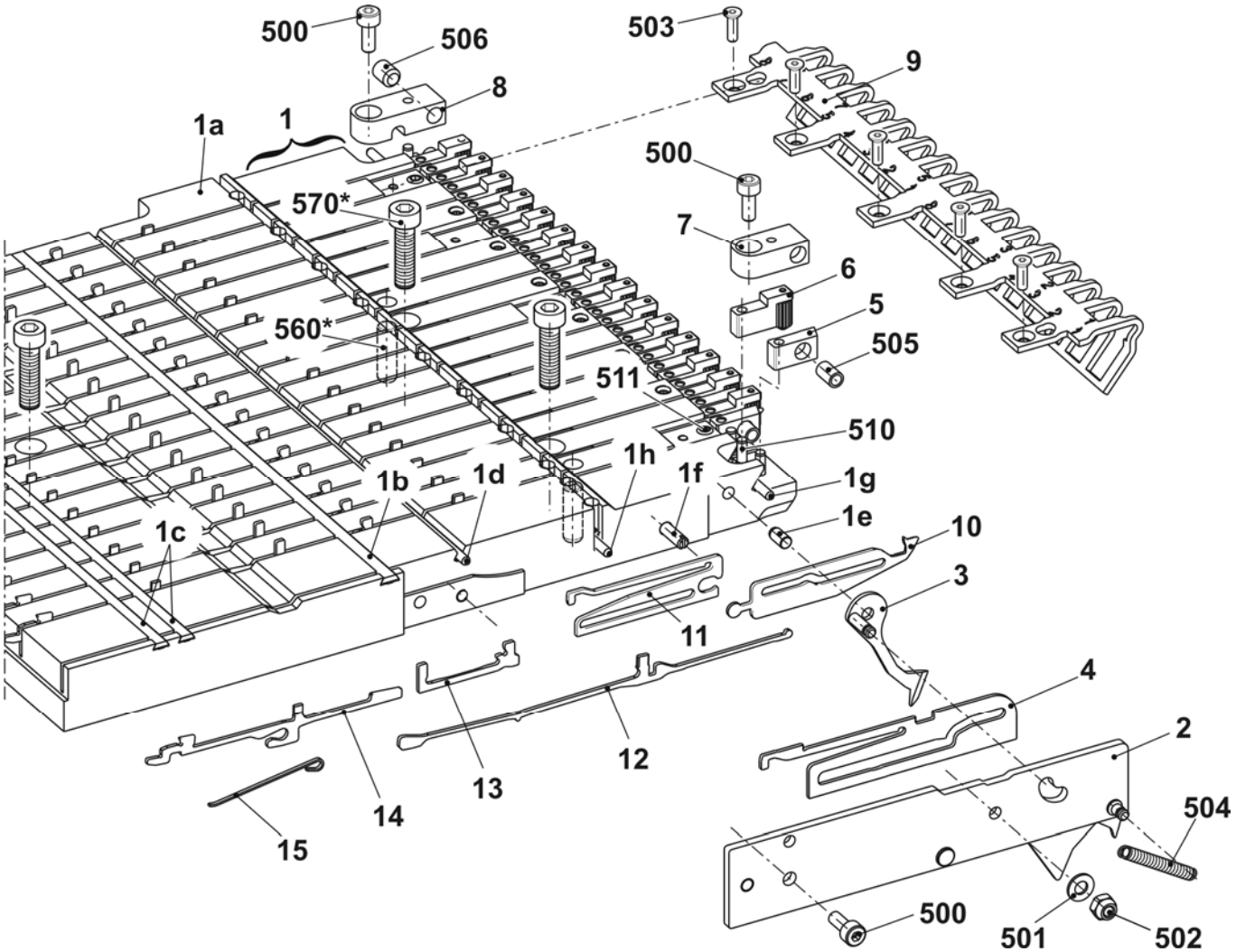

Left clamping/cutting bed E10 + E12 + E14 + E7.2 + E8.2

Pos	Designation		ID	Pos	Designation	ID
Σ	**Left clamping/cutting bed E10 + E12 + E14 + E7.2 + E8.2**		**253 655**			
1	Guide plate on the left E5-14		244 642	8	Spring holder	244 590
	1a	Guide plate on the left E5-14	244 632	9	Holding strip on the left	250 607
	1b	Cover rail	243 923	10	Tuck needle on the left E10-14	244 630
	1c	Cover rail	243 924	11	Intermediate cam E10-14	244 591
	1d	Fixed wire	243 925	12	Coupling part E4-E8	200 682
	1e	Axle	211 349	13	Intermediate slider with brake E5-E8	237 323
	1f	Guide pin	211 351	14	Selection jack E10-14	200 687
	1g	Fixed wire	215 927	15	Selector spring E4-E8	200 690
	1h	Fixed wire	244 589	500	Cap screw M4x10	023 136
	510	Setting pin 3x16	020 649	501	Hexagon nut M4-8	023 046
	511	Set screw M5x5	236 061	502	U-washer 4	020 870
2	Cover on the left co. E10-14		251 120	503	Countersunk head screw M3x10	242 029
3	Catch hook on the left E10-14		251 377	504	Tension spring 5x0.5x17.4	023 377
4	Slider E5-14		253 084	505	Compression spring D 117 W 07x4.3x12.1	023 521
5	Blade		243 948	506	Set screw M6x8-45H	022 581
6	Clamp on the left co.		244 633	560*	Setting pin 6x16	020 677
7	Spring holder		244 032	570*	Cap screw M6x20	244 824

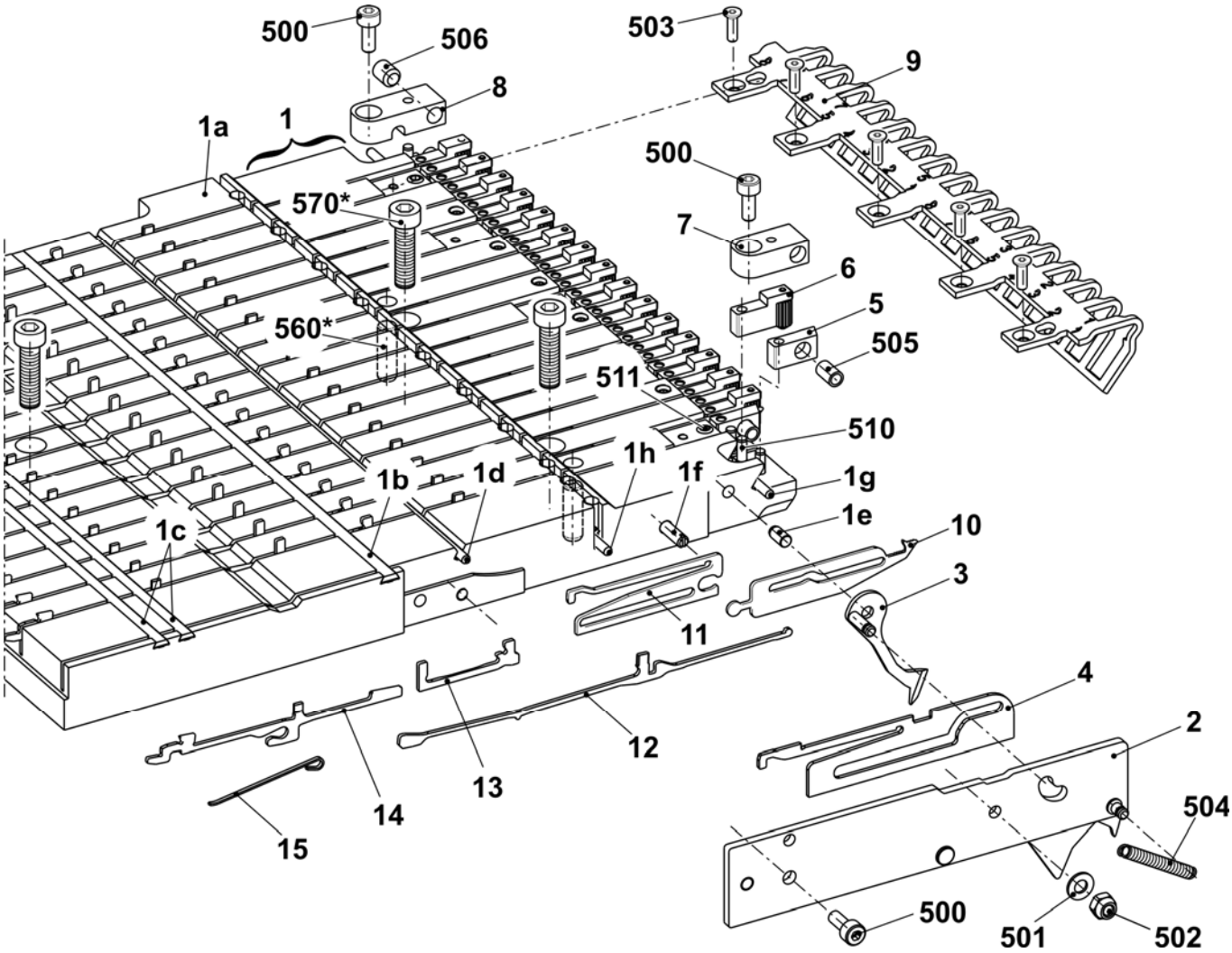

STOLL
THE RIGHT WAY TO KNIT

Left clamping/cutting bed E16 + E18 + E9.2

Pos	Designation		ID	Pos	Designation	ID
Σ	**Left clamping/cutting bed E16-18**		**244 821**			
1	Guide plate on the left E16-18		244 760	8	Spring holder	244 590
	1a	Guiding plate on the left	244 738	9	Holding strip on the left	250 607
	1b	Cover rail	243 923	10	Tuck needle on the left E16-18	244 740
	1c	Cover rail	243 924	11	Intermediate cam (E16-18)	244 741
	1d	Fixed wire	243 925	12	Coupling part E10-12	200 683
	1e	Axle	211 349	13	Intermediate slider with brake E10-12	237 324
	1f	Guide pin	211 351	14	Selection jack E10-12	200 688
	1g	Fixed wire	215 927	15	Selector spring E10-12	200 691
	1h	Fixed wire	244 589	500	Cap screw M4x10	023 136
	510	Setting pin 3x16	020 649	501	Hexagon nut M4-8	023 046
	511	Set screw M5x5	236 061	502	U-washer 4	020 870
2	Cover on the left co. E16-20		242 835	503	Countersunk head screw M3x10	242 029
3	Catch needle on the left E16-18		242 831	504	Tension spring 5x0.5x17.4	023 377
4	Slider E16-20		242 828	505	Compression spring D 117 W 07x4.3x12.1	023 521
5	Blade		243 948	506	Set screw M6x8-45H	022 581
6	Clamp on the left co.		244 633	560*	Setting pin 6x16	020 677
7	Spring holder		244 032	570*	Cap screw M6x20	244 824

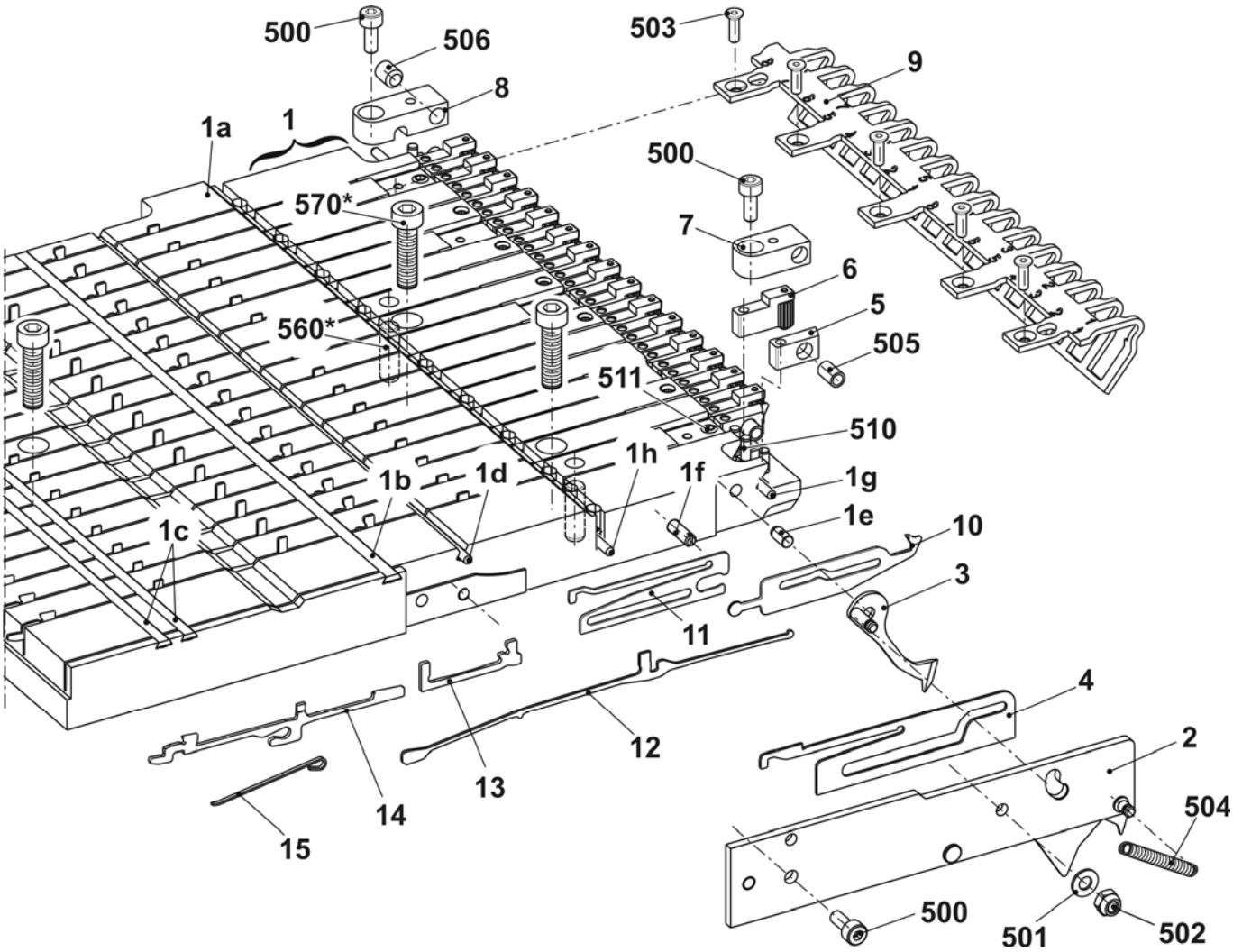

Right clamping/cutting bed E5 + E7 + E8 + E2,5.2 + E3,5.2 + E5.2 + E6.2

Pos	*Designation*		*ID*	*Pos*	*Designation*	*ID*
Σ	**Right clamping/cutting bed E5 + E7 + E8 + E2,5.2 + E3,5.2 + E5.2 + E6.2**		**253 652**			
1	Guide plate on the right E5-14		244 601	8	Spring holder	244 590
	1a	Guide plate on the right E5-14	244 586	9	Holding strip on the right	250 510
	1b	Cover rail	243 923	10	Tuck needle on the right E5-8	244 728
	1c	Cover rail	243 924	11	Intermediate cam E10-14	244 591
	1d	Fixed wire	243 925	12	Coupling part E4-E8	200 682
	1e	Axle	211 349	13	Intermediate slider with brake E5-E8	237 323
	1f	Guide pin	211 351	14	Selection jack E4-E8	200 687
	1g	Fixed wire	215 927	15	Selector spring E4-E8	200 690
	1h	Fixed wire	244 589	500	Cap screw M4x10	023 136
	510	Setting pin 3x16	020 649	501	Hexagon nut M4-8	023 046
	511	Set screw M5x5	236 061	502	U-washer 4	020 870
2	Cover on the right co. E10-14		251 119	503	Countersunk head screw M3x10	242 029
3	Catch hook on the right E10-14		251 378	504	Tension spring 5x0.5x17.4	023 377
4	Slider E5-14		253 084	505	Compression spring D 117 W 07x4.3x12.1	023 521
5	Blade		243 948	506	Set screw M6x8-45H	022 581
6	Clamp on the right co.		244 602	560*	Setting pin 6x16	020 677
7	Spring holder		244 032	570*	Cap screw M6x20	244 824

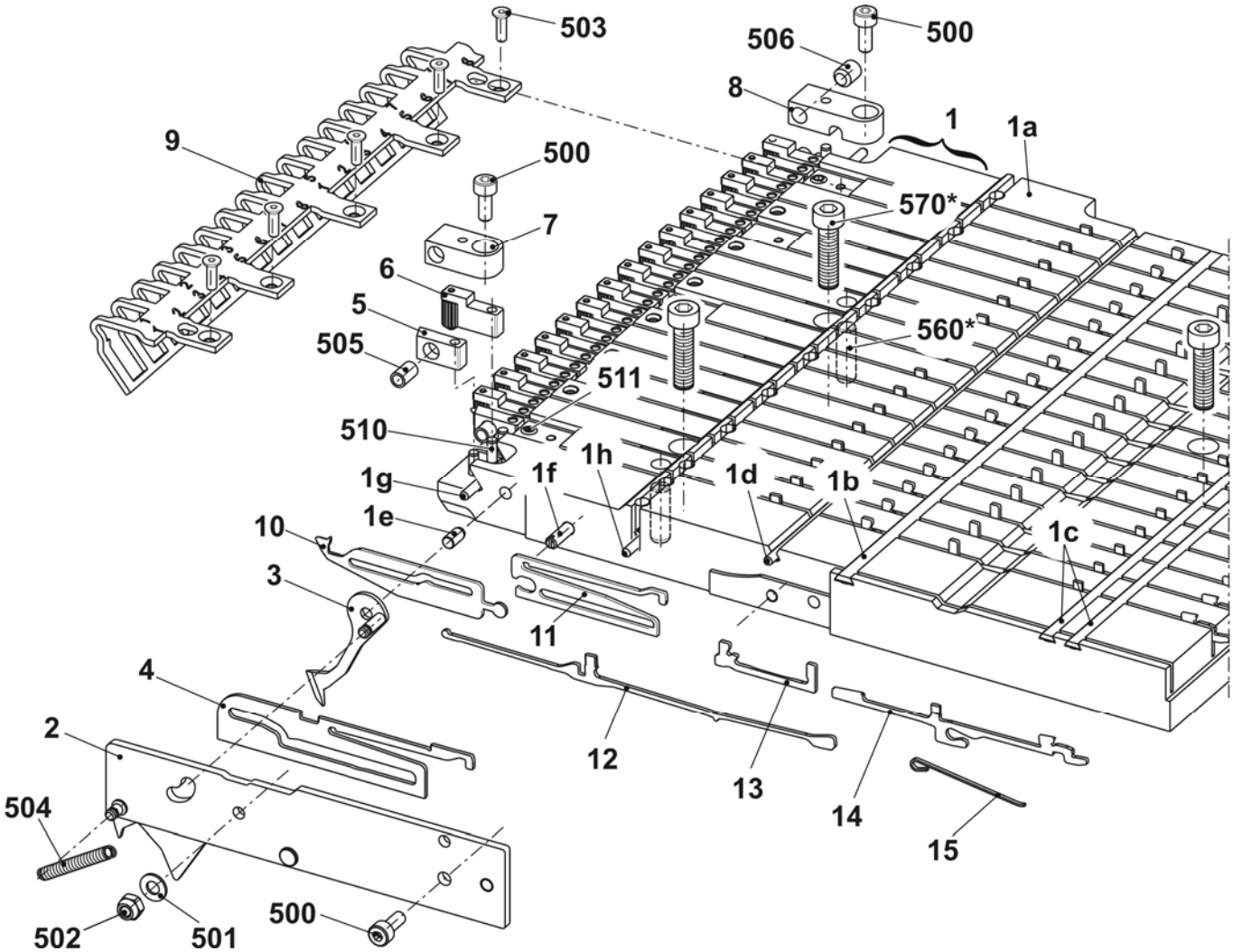

STOLL
THE RIGHT WAY TO KNIT

Right clamping/cutting bed E10 + E12 + E14 + E7.2 + E8.2

Pos	Designation		ID	Pos	Designation	ID
Σ	**Right clamping/cutting bed E10 + E12 + E14 + E7.2 + E8.2**		**253 654**			
1	Guide plate on the right E5-14		244 601	8	Spring holder	244 590
	1a	Guide plate on the right E5-14	244 586	9	Holding strip on the right	250 510
	1b	Cover rail	243 923	10	Tuck needle on the right E10-14	244 592
	1c	Cover rail	243 924	11	Intermediate cam E10-14	244 591
	1d	Fixed wire	243 925	12	Coupling part E4-E8	200 682
	1e	Axle	211 349	13	Intermediate slider with brake E5-E8	237 323
	1f	Guide pin	211 351	14	Selection jack E4-E8	200 687
	1g	Fixed wire	215 927	15	Selector spring E4-E8	200 690
	1h	Fixed wire	244 589	500	Cap screw M4x10	023 136
	510	Setting pin 3x16	020 649	501	Hexagon nut M4-8	023 046
	511	Set screw M5x5	236 061	502	U-washer 4	020 870
2	Cover on the right co. E10-14		251 119	503	Countersunk head screw M3x10	242 029
3	Catch hook on the right E10-14		251 378	504	Tension spring 5x0.5x17.4	023 377
4	Slider E5-14		253 084	505	Compression spring D 117 W 07x4.3x12.1	023 521
5	Blade		243 948	506	Set screw M6x8-45H	022 581
6	Clamp on the right co.		244 602	560*	Setting pin 6x16	020 677
7	Spring holder		244 032	570*	Cap screw M6x20	244 824

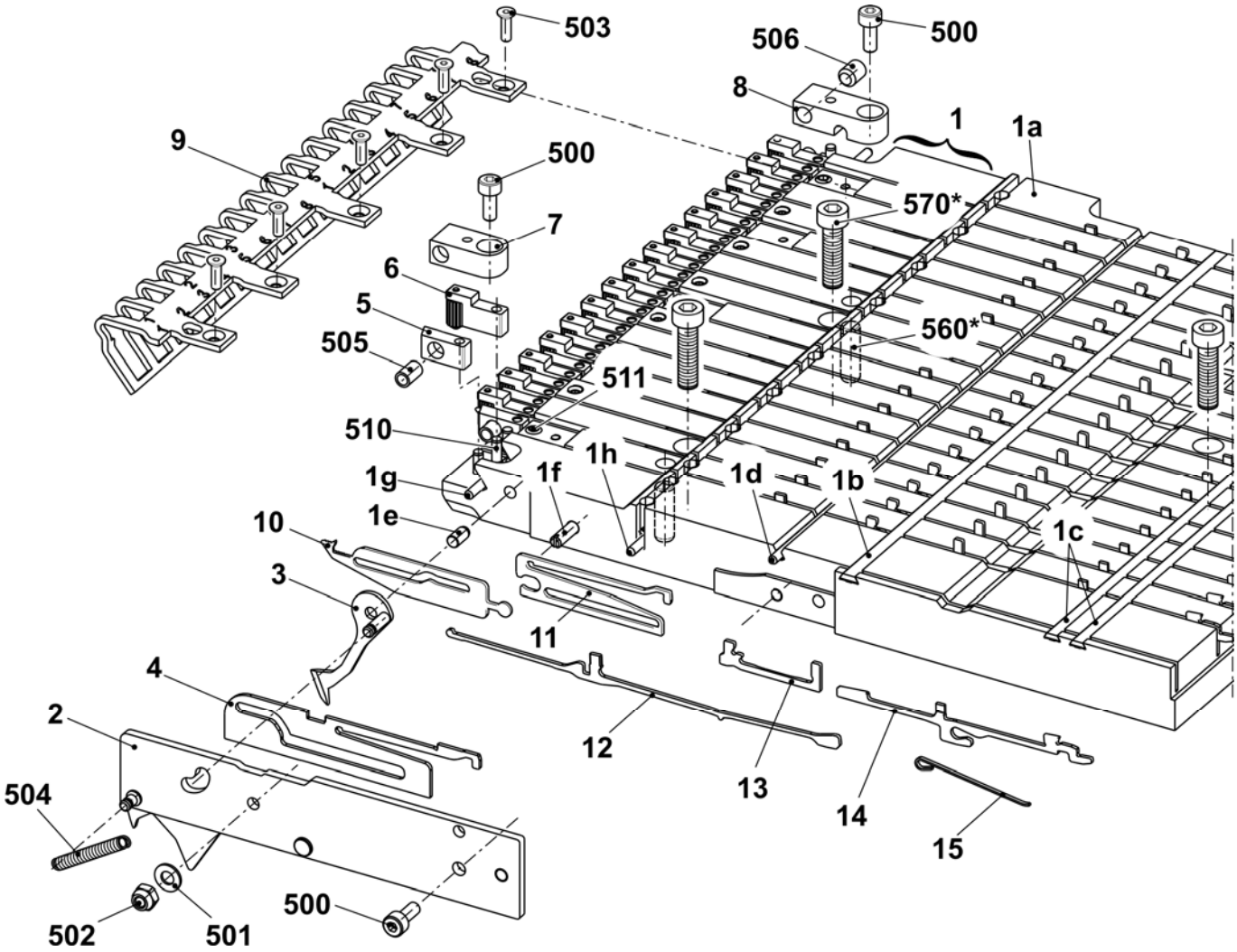

Right clamping/cutting bed E16 + E18 + E9.2

Pos	Designation		ID	Pos	Designation	ID
Σ	**Right clamping/cutting bed E16 + E18 + E9.2**		**244 062**			
1	Guide plate on the right E16-18		244 759	8	Spring holder	244 590
	1a	Guide plate on the right	244 737	9	Holding strip on the right	250 510
	1b	Cover rail	243 923	10	Tuck needle on the right E16-18	244 739
	1c	Cover rail	243 924	11	Intermediate cam	244 741
	1d	Fixed wire	243 925	12	Coupling part E10-12	200 683
	1e	Axle	211 349	13	Intermediate slider with brake E10-12	237 324
	1f	Guide pin	211 351	14	Selection jack E10-12	200 688
	1g	Fixed wire	215 927	15	Selector spring E10-12	200 691
	1h	Fixed wire	244 589	500	Cap screw M4x10	023 136
	510	Setting pin 3x16	020 649	501	Hexagon nut M4-8	023 046
	511	Set screw M5x5	236 061	502	U-washer 4	020 870
2	Cover on the right co. E16-20		242 836	503	Countersunk head screw M3x10	242 029
3	Catch hook on the right E16-18		242 833	504	Tension spring 5x0.5x17.4	023 377
4	Slider E16-20		242 828	505	Compression spring D 117 W 07x4.3x12.1	023 521
5	Blade		243 948	506	Set screw M6x8-45H	022 581
6	Clamp on the right co.		244 602	560*	Setting pin 6x16	020 677
7	Spring holder		244 032	570*	Cap screw M6x20	244 824

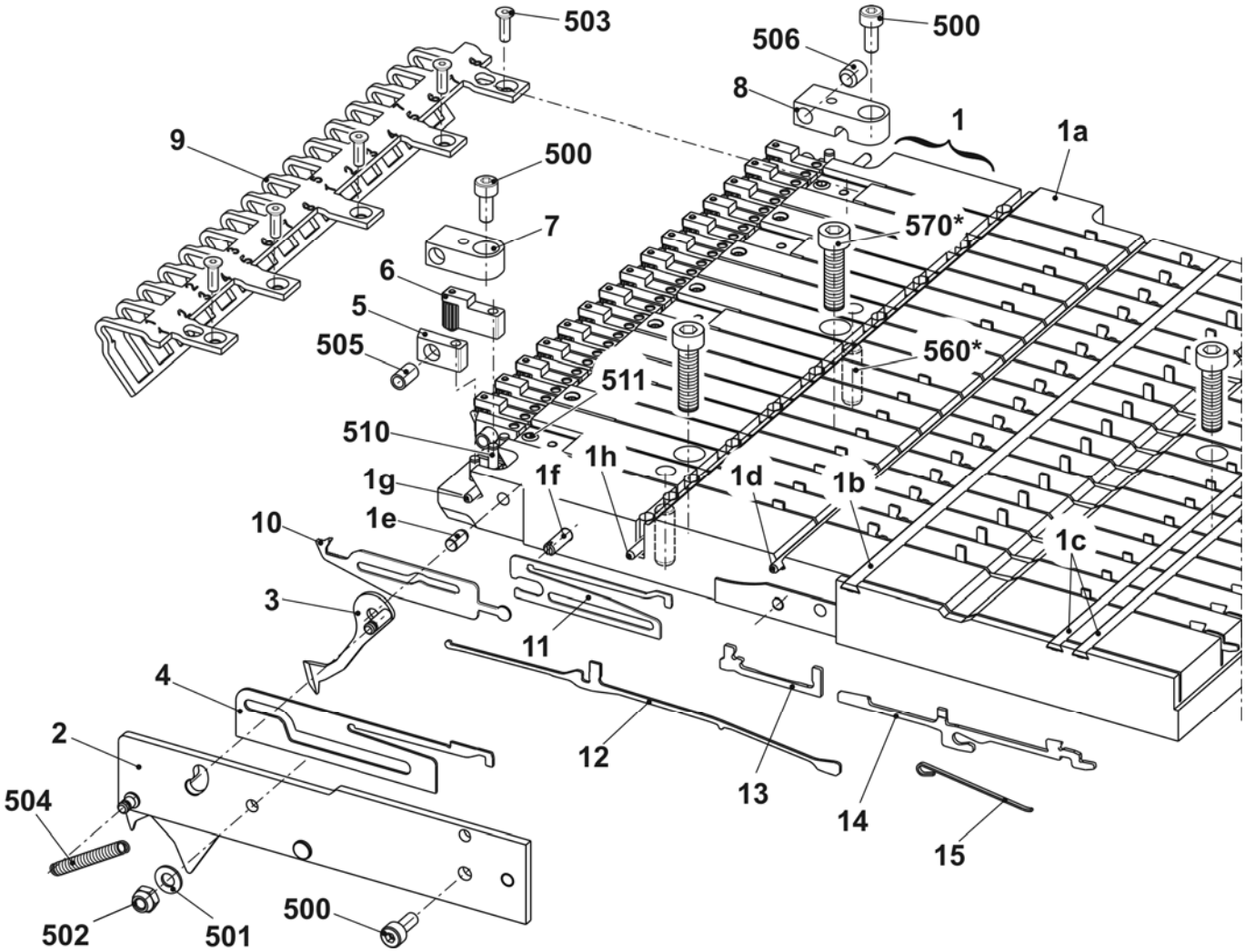

Yarn brake on the left and right

Pos	Designation	ID		Pos	Designation	ID
Σ L	**Yarn brake on the left**	**245 031**		**Σ R**	**Yarn brake on the right**	**245 032**
1	Cover on the left	240 020		1	Cover on the left	240 022
2	Clamping part	245 030		2	Clamping part	245 030
3	Leaf spring	232 164		3	Leaf spring	232 164
500	Cap screw M4x8	022 501		500	Cap screw M4x8	022 501

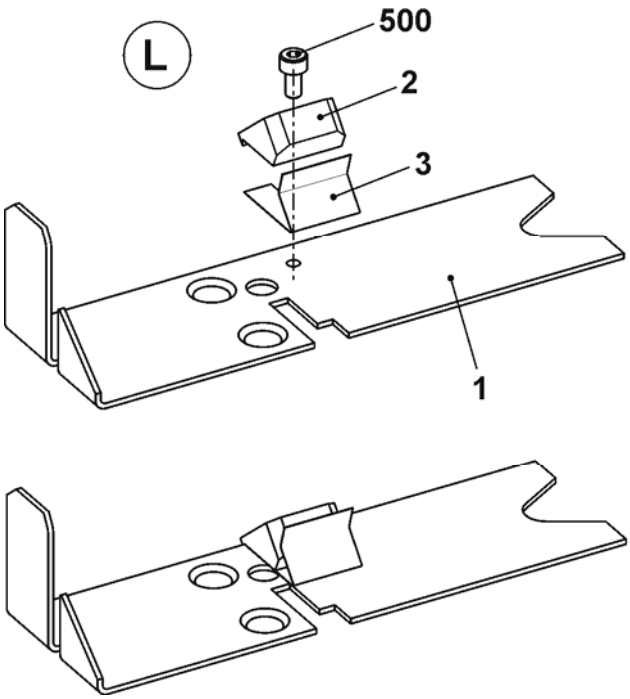

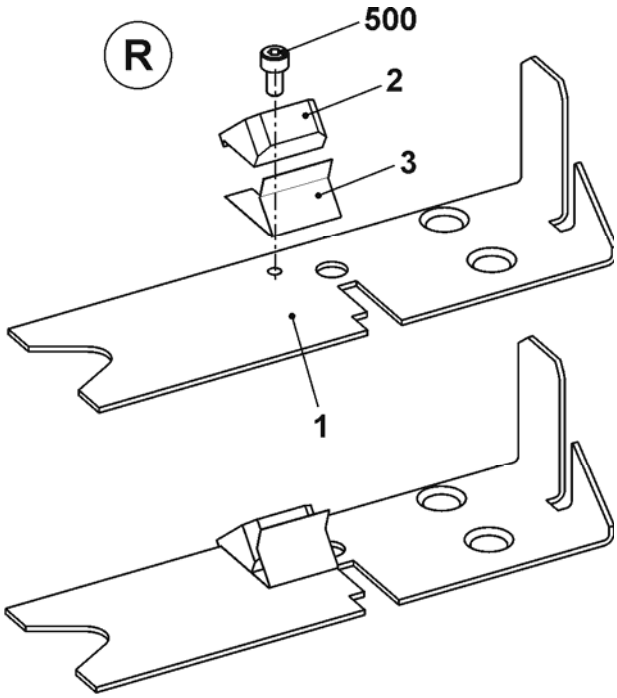

Additional board

Pos	Designation	ID		Pos	Designation	ID
Σ	**Additional board 7XX/8XX**	**241 928**				
1	Additional board welded	241 927		4	Bobbin support	200 363
2	Positioning pin	202 777		500	Countersunk screw M4x30	023 681
3	Disc D=130	062 385		501	Washer 5.3x30x1.25	023 556

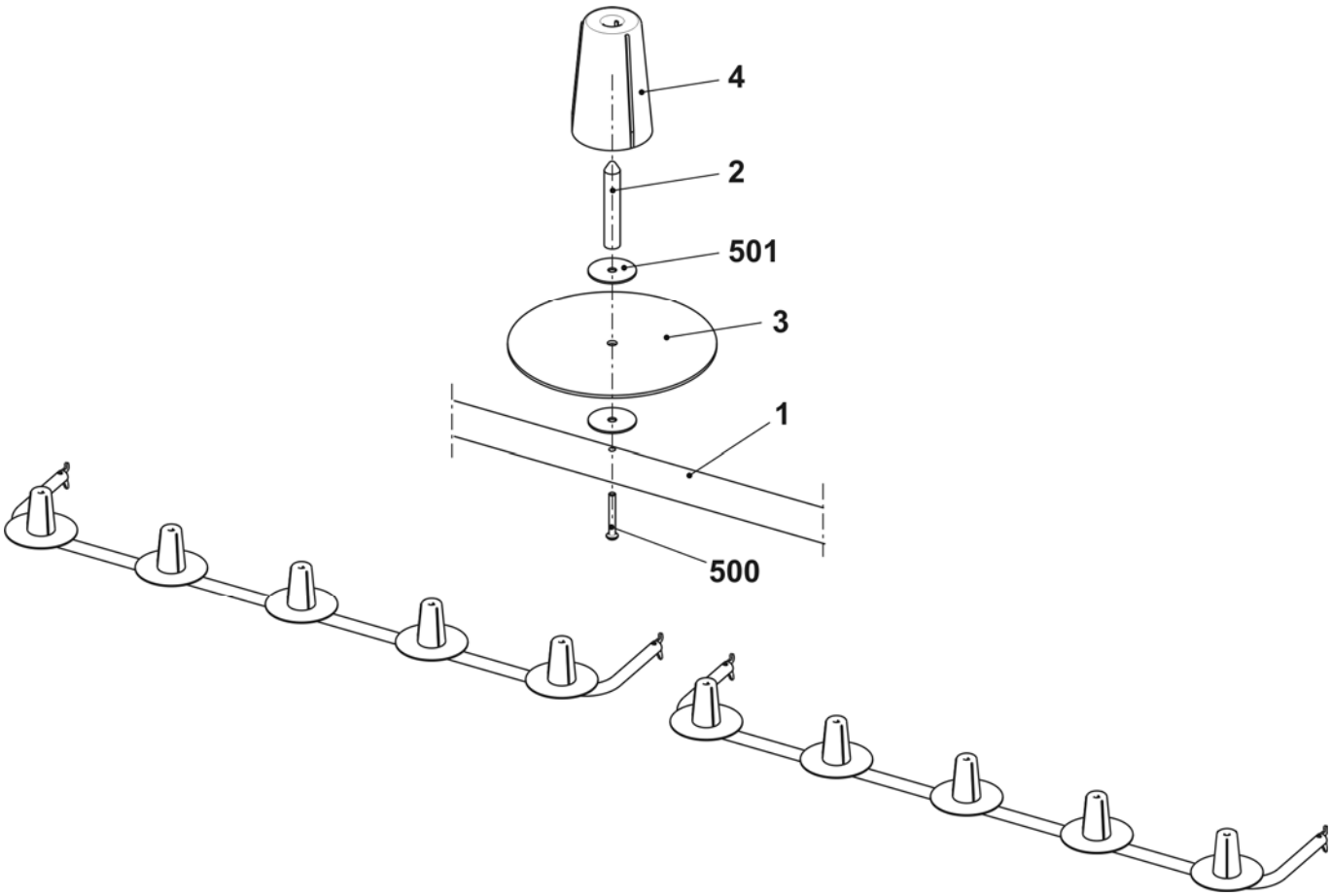

Yarn guide co. E5 IYC

Pos	Designation		ID	Pos	Designation		ID
Σ	**Yarn guide co. E5 IYC E2,5.2 + E3,5.2 + E5.2**		**245 161**				
1	IYC carriage co. 1+8 E5		250 319	4	IYC carriage co. 4+5 E5		250 322
	1a	IYC carriage 1+8	250 315		4a	IYC carriage 4+5	250 318
	1b	Yarn carrier head 1+8 co. E5	244 076		4b	Yarn carrier head 3-6 co. E5	244 078
2	IYC carriage co. 2+7 E5		250 320	5	Limiter on the left with 2 eyelets		244 446
	2a	IYC carriage 2+7	250 316	6	Limiter on the right with two eyelets		244 445
	2b	Yarn carrier head 2+7 co. E5	244 077	C	Yarn guide angle		242 863
3	IYC carriage co. 3+6 E5		250 321	500	Countersunk screw M4x5		239 549
	3a	IYC carriage 3+6	250 317	501	U-washer 4		020 870
	3b	Yarn carrier head 3-6 co. E5	244 078				

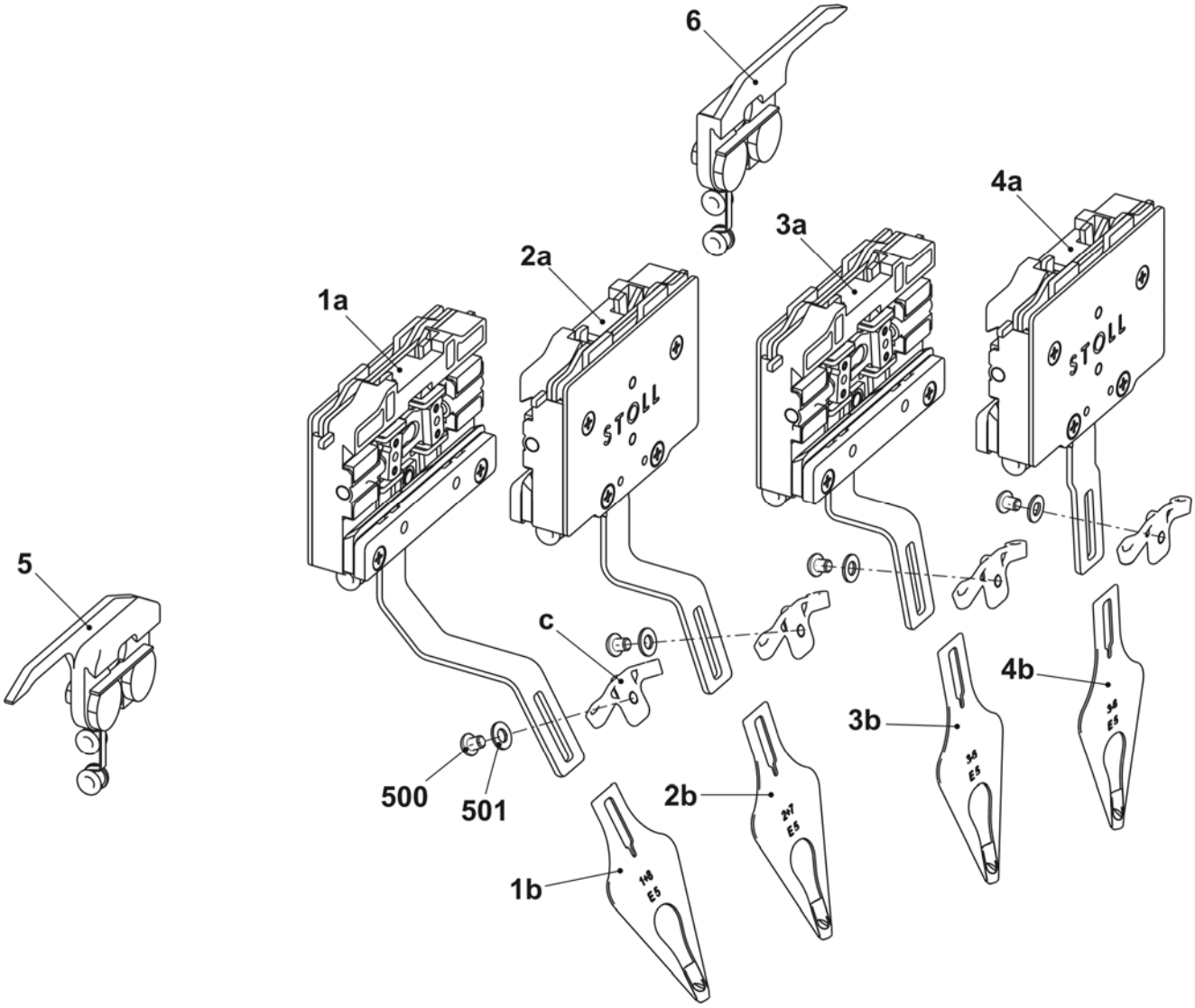

Yarn guide co. E7-8 IYC

Pos	Designation		ID	Pos	Designation		ID
Σ	**Yarn guide co. E7-8 IYC (E6.2)**		**245 162**				
1	IYC carriage co. 1+8 E7-8		250 323	4	IYC carriage co. 4+5 E7-8		250 326
	1a	IYC carriage 1+8	250 315		4a	IYC carriage 4+5	250 318
	1b	Yarn carrier head 1+8 co. E7-8	244 082		4b	Yarn carrier head 3-6 co. E7-8	244 084
2	IYC carriage co. 2+7 E7-8		250 324	5	Limiter on the left with 2 eyelets		244 446
	2a	IYC carriage 2+7	250 316	6	Limiter on the right with two eyelets		244 445
	2b	Yarn carrier head 2+7 co. E7-8	244 083	C	Yarn guide angle		242 863
3	IYC carriage co. 3+6 E7-8		250 325	500	Countersunk screw M4x5		239 549
	3a	IYC carriage 3+6	250 317	501	U-washer 4		020 870
	3b	Yarn carrier head 3-6 co. E7-8	244 084				

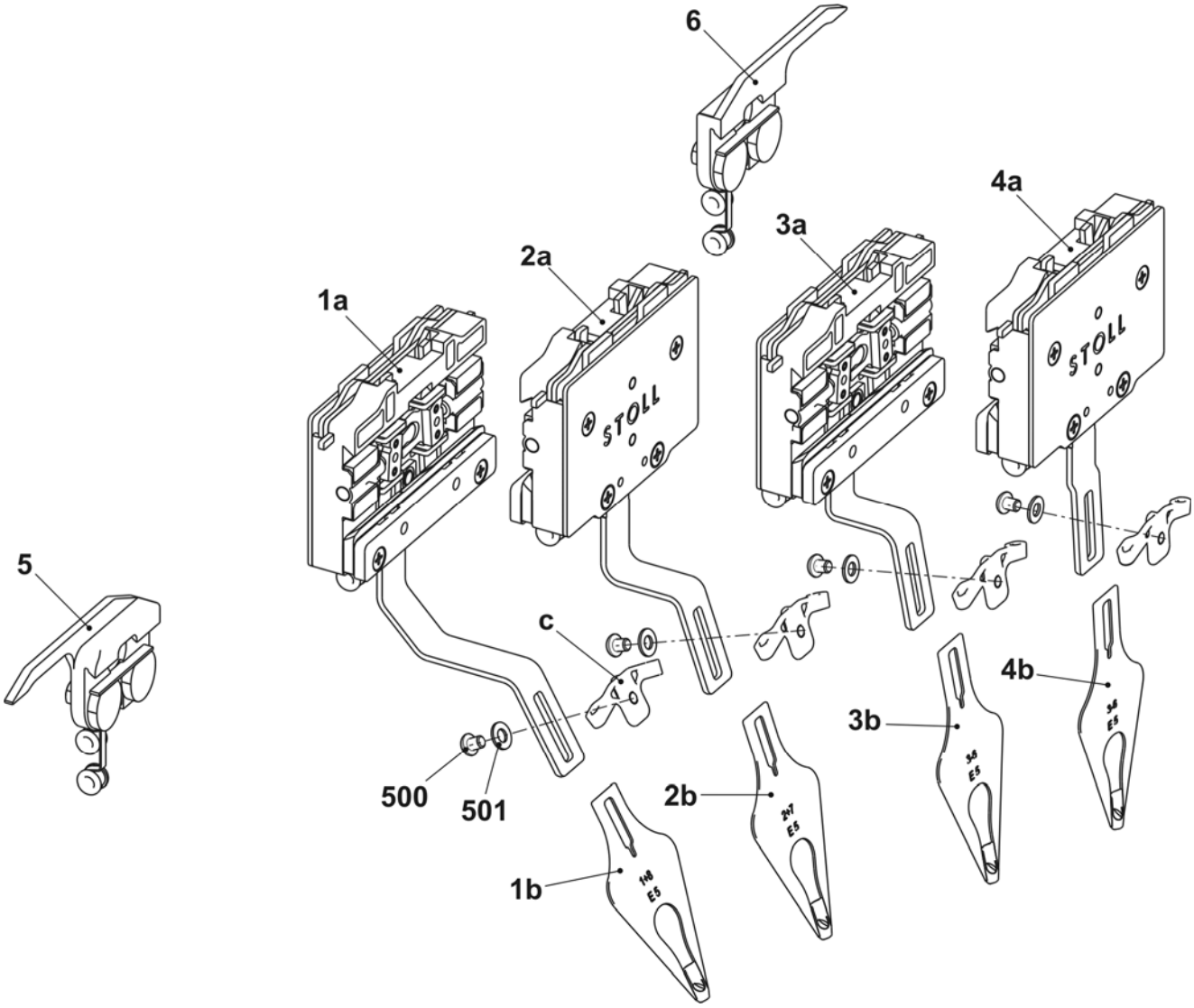

Yarn guide co. E10-14 IYC

Pos	Designation		ID	Pos	Designation		ID
Σ	**Yarn guide co. E10-14 IYC E7.2 + E8.2 + E9.2**		**245 163**				
1	IYC carriage co. 1+8 E10-14		250 327	4	IYC carriage co. 4+5 E10-14		250 330
	1a	IYC carriage 1+8	250 315		4a	IYC carriage E10-14	250 318
	1b	Yarn carrier head 1+8 co. E10-14	250 008		4b	Yarn carrier head 3-6 co. E10-14	250 010
2	IYC carriage co. 2+7 E10-14		250 328	5	Limiter on the left with 2 eyelets		244 446
	2a	IYC carriage 2+7	250 316	6	Limiter on the right with two eyelets		244 445
	2b	Yarn carrier head 2+7 co. E10-14	250 009	C	Yarn guide angle		242 863
3	IYC carriage co. 3+6 E10-14		250 329	500	Countersunk screw M4x5		239 549
	3a	IYC carriage 3+6	250 317	501	U-washer 4		020 870
	3b	Yarn carrier head 3-6 co. E10-14	250 010				

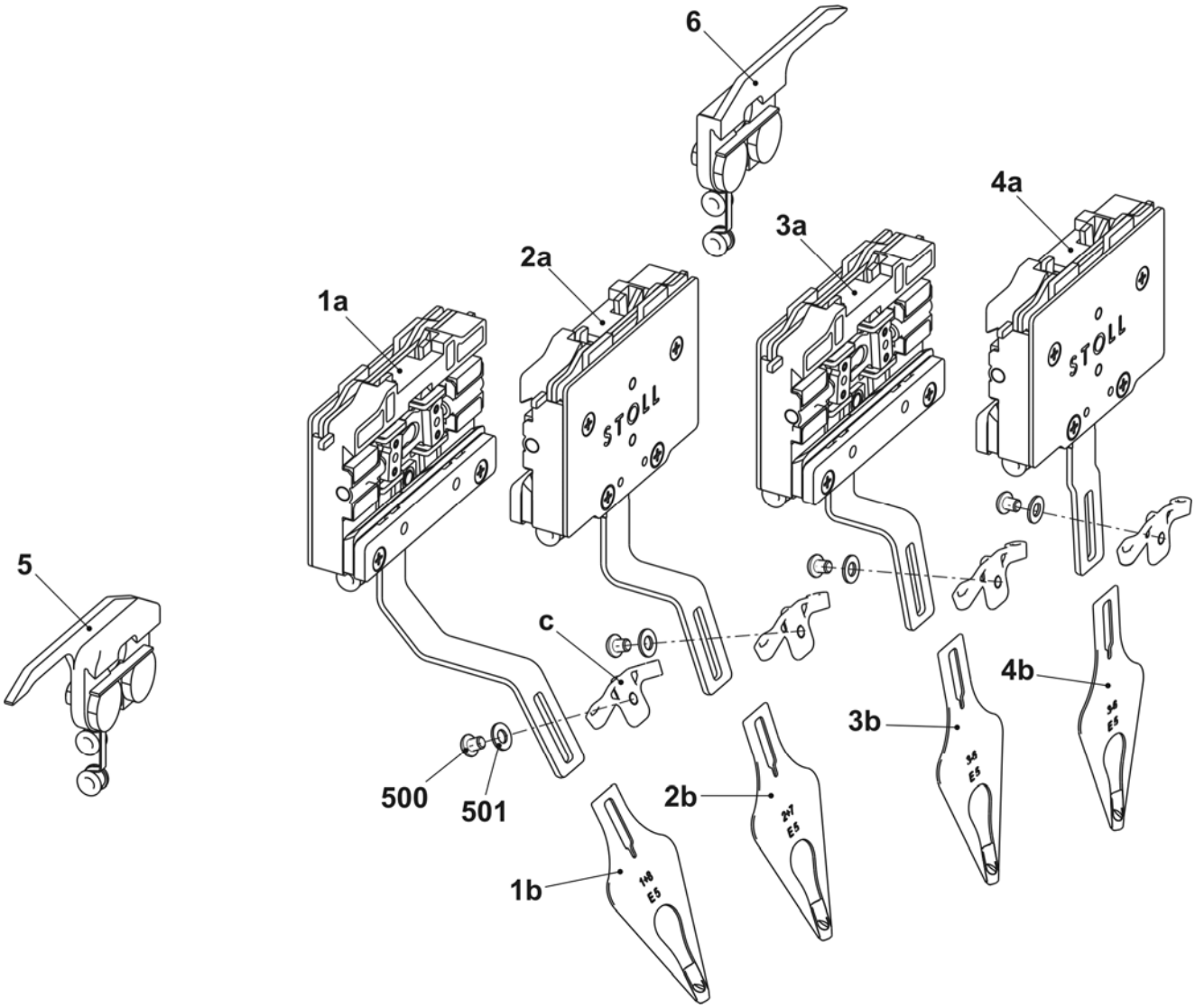

Yarn guide co. E16-18 IYC
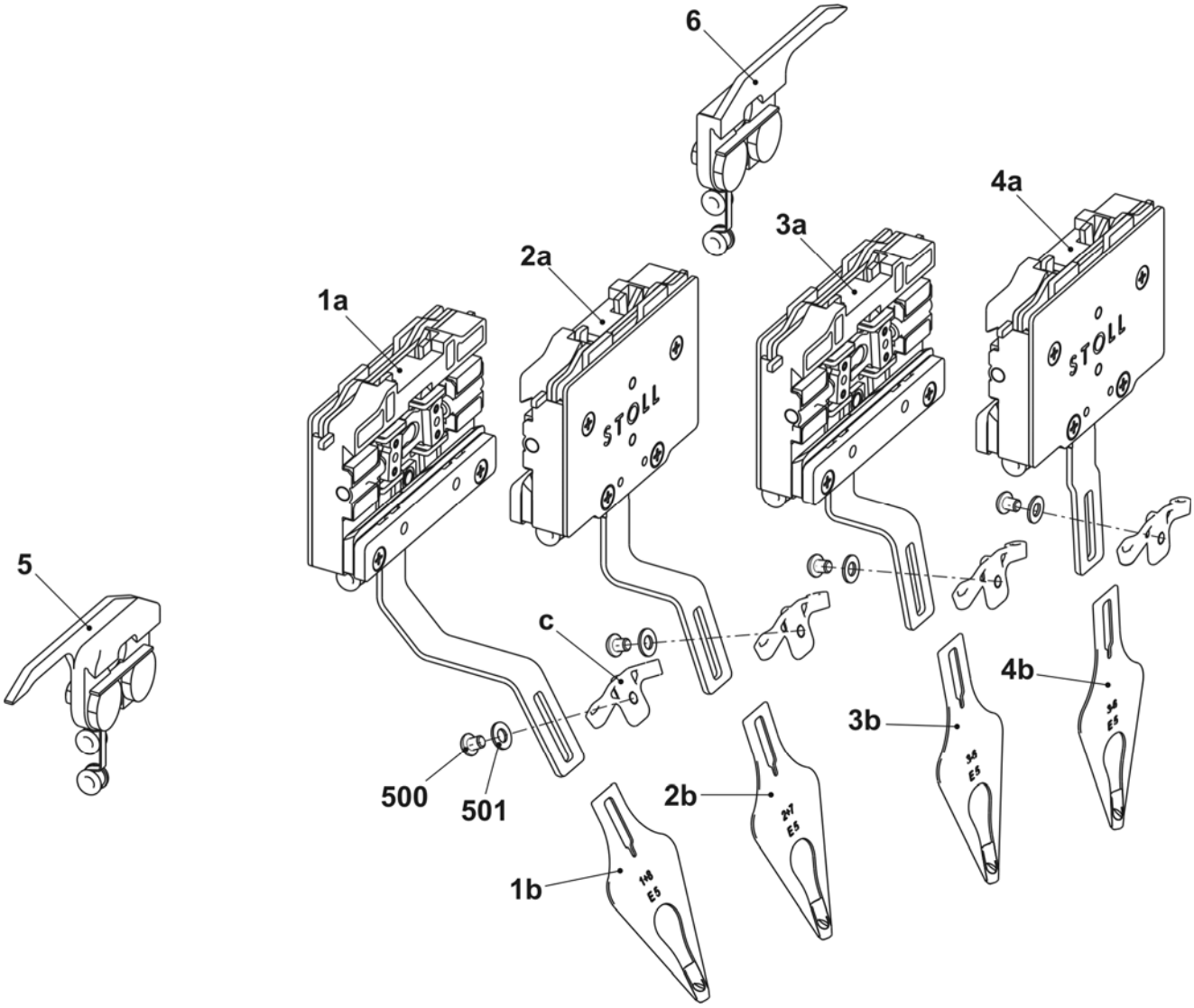
Pos	Designation		ID	Pos	Designation		ID
Σ	**Yarn guide co. E16-18 IYC**		**245 164**				
1	IYC carriage co. 1+8 E16-18		250 331	4	IYC carriage co. 4+5 E16-18		250 334
	1a	IYC carriage 1+8	250 315		4a	IYC carriage 4+5	250 318
	1b	Yarn carrier head 1+8 co. E16-18	250 011		4b	Yarn carrier head 3-6 co. E16-18	250 013
2	IYC carriage co. 2+7 E16-18		250 332	5	Limiter on the left with 2 eyelets		244 446
	2a	IYC carriage 2+7	250 316	6	Limiter on the right with two eyelets		244 445
	2b	Yarn carrier head 2+7 co. E16-18	250 012	c	Yarn guide angle		242 863
3	IYC carriage co. 3+6 E16-18		250 333	500	Countersunk screw M4x5		239 549
	3a	IYC carriage 3+6	250 317	501	U-washer 4		020 870
	3b	Yarn carrier head 3-6 co. E16-18	250 013